Solid-state Timer
H3CA

CSM_H3CA_DS_E_4_5

DIN-sized (48 x 48, 45 x 75 mm) Timer with Digital Setting and LCD Display

- Dual power supplies for free AC/DC.
- Eight operation modes selectable with one unit.
- Any desired time can be set digitally within a range from 0.1 seconds to 9,990 hrs.
- Four external signal inputs.
- ON/OFF indicator for control output and bar indicator for remaining time.
- Conforms to UL, CSA, and CE marking.

For the most recent information on models that have been certified for safety standards, refer to your OMRON website.

Ordering Information

Operation/resetting system	Operation mode	Terminal	Time-limit contact	Instantaneous contact	Mounting	
					Surface mounting/ track mounting	Flush mounting
Time-limit operation/self-resetting/external resetting (see note 2)	8 operation modes (selectable) (see note 3)	11-pin round socket	SPDT	---	H3CA-A	H3CA-A
		Front screw			H3CA-FA	---
Time-limit operation/ self-resetting	ON-delay operation	8-pin round socket	DPDT	---	H3CA-8	H3CA-8
			SPDT	SPDT	H3CA-8H	H3CA-8H

Note: 1. Specify both the model number and supply voltage when ordering for the H3CA-8H and H3CA-8.
2. The operation/resetting system depends on the selected operation mode. For details, see *"Timing Chart"*.
3. The 8 operation modes are as follows:

A: ON-delay operation
B: Repeat cycle operation
C: Signal ON/OFF-delay operation (1)
D: Signal OFF-delay operation (1)
E: Interval operation
F: One-shot and flicker operation
G: Signal ON/OFF-delay operation (2)
H: Signal OFF-delay operation (2)

■ Accessories (Order Separately)

Name/specifications	Model
Flush mounting adapter	**Y92F-30**
	Y92F-70
	Y92F-71
Front cover	**Y92A-48B**
	Y92A-48D

Name/specifications	Model
Front connecting socket	**P2CF-08**
	P2CF-11
Front connecting socket Finger protection (see note 1)	**P2CF-08-E**
	P2CF-11-E
Back connecting socket	**P3G-08**
	P3GA-11
Back connecting socket Solder terminal	**PL08**
	PL11
Terminal block cover for P3G-08/P3GA-11 (see note 2)	**Y92A-48G**

Note: 1. Round crimp terminals cannot be used with finger-protection structure sockets. Use forked crimp terminals.
2. A terminal cover (Y92A-48G) can be used with P3GA-11 and P3G-08 for finger protection.

Specifications

■ Time Ranges

A desired time can be set within a range of 0.1 s to 9,990 hrs by combining the three thumbwheel switch modules for time setting and one module for time unit selection.

Time unit		0.1 s	1 s	0.1 min	1 min	0.1 hrs	1 hr	10 hrs
Time range	1 to 999 (3 digits)	0 0 1 0.1 S to 9 9 9 10 h						

■ Ratings

Item	H3CA-A/H3CA-FA	H3CA-8	H3CA-8H
Rated supply voltage (See note 2.)	24 to 240 VAC (50/60 Hz), 12 to 240 VDC (permissible ripple: 20% max.)	100/110/120, 200/220/240 VAC, (50/60 Hz), 24 VDC, 110 VDC (permissible ripple: 20% max.) (See note 1.)	
Operating voltage range	90% to 110% of rated supply voltage	85% to 110% of rated supply voltage	
Power consumption	AC: approx. 4 VA DC: approx. 2 W	AC: approx. 10 VA/1 W DC: approx. 1 W	AC: approx. 10 VA/1.5 W DC: approx. 2 W
Control outputs	3 A at 250 VAC, resistive load (cosϕ = 1) Minimum applicable load H3CA-8, H3CA-A and H3CA-FA: 10 mA at 5 VDC (failure level: Preference value) H3CA-8H: 100mA at 5 VDC (failure level: Preference value) Contact materials : Ag-alloy		

Note: 1. Single-phase, full-wave rectified power sources may be used for 24 to 240 VDC.
2. Refer to *Safety Precautions for All Times* when combining the Timer with an AC 2-wire proximity sensor.

■ Characteristics

Accuracy of operating time	±0.3% ±0.05 s
Influence of voltage	
Influence of temperature	
Setting error	±0.5% ±0.05 s max.
Reset time	H3CA-A/-FA: 0.5 s max. H3CA-8H/-8: 0.1 s max.
Insulation resistance	100 MΩ min. (at 500 VDC)
Dielectric strength	2,000 VAC, 50/60 Hz for 1 min (between current-carrying and non-current-carrying parts and between contact and control circuit) 1,000 VAC, 50/60 Hz for 1 min (between non-continuous contacts)
Impulse withstand voltage	A wide AC/DC power supply range, 200/220/240 V specifications Between power terminals: 5 kV, Between current-carrying terminal and exposed non-current-carrying metal parts: 5 kV 100/110/120 VAC, 100/110 VDC specifications Between power terminals: 3 kV, Between current-carrying terminal and exposed non-current-carrying metal parts: 4.5 kV 24 VDC specifications Between power terminals: 1 kV, Between current-carrying terminal and exposed non-current-carrying metal parts: 1.5 kV
Vibration resistance	Destruction: 10 to 55 Hz with 0.75-mm double amplitude for 1 h each in three directions Malfunction: 10 to 55 Hz with 0.5-mm double amplitude for 10 min each in three directions
Shock resistance	Destruction: 980 m/s^2 Malfunction: 98 m/s^2
Ambient temperature	Operating: –10°C to 55°C
Ambient humidity	Operating: 35% to 85%
Life expectancy	Mechanical: 10,000,000 operations min. (under no load at 1,800 operations/h) Electrical: 100,000 operations min. (3 A at 250 VAC, cosϕ = 1 at 1,800 operations/h) See *Lift-test Curve* for more details.
Approved standards	UL508, CSA C22.2 No. 14, LR, NK Conforms to EN61812-1.
EMC	(EMI) EN61812-1 Emission Enclosure: EN55011 Group 1 class A Emission AC mains: EN55011 Group 1 class A (EMS) EN61812-1 Immunity ESD: IEC61000-4-2 Immunity RF-interference: IEC61000-4-3 Immunity Burst: IEC61000-4-4 Immunity Surge: IEC61000-4-5 Immunity Conducted Disturbance: IEC61000-4-6 Immunity Voltage Dip/Interruption: IEC61000-4-11
Weight	H3CA-A: approx. 110 g H3CA-FA: approx. 190 g

Engineering Data

■ Life-test Curve

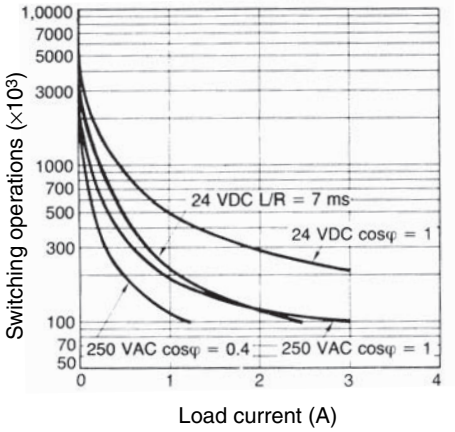

Reference: A maximum current of 0.15 A can be switched at 125 VDC (cosϕ = 1). Maximum current of 0.1 A can be switched if L/R is 7 ms. In both cases, a life of 100,000 operations can be expected.

Note: 1. The H3CA Series has been tested for the following: impulse voltages, noise (via noise simulator, for L loads, and for relay oscillation), and resistance to static electricity.

2. Minimum applicable load (P reference values):
H3CA-A(FA), H3CA-8H: 100 mA at 5 VDC
H3CA-8: 10 mA at 5 VDC

Nomenclature

H3CA-A/H3CA-8H

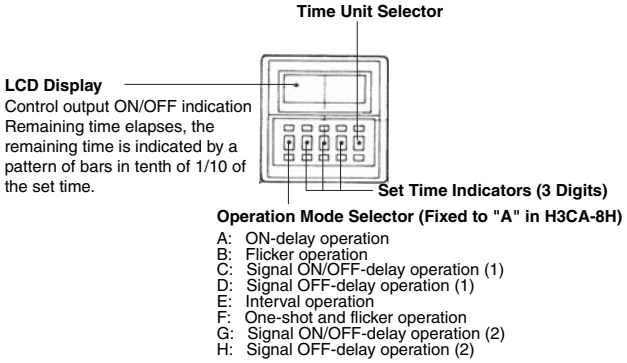

H3CA-FA

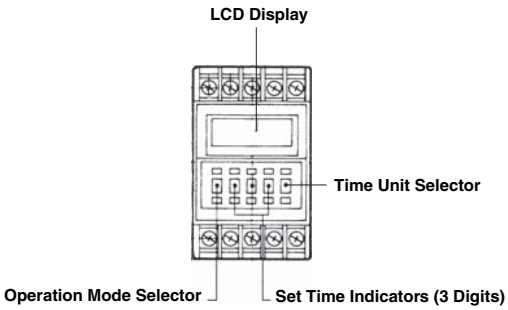

Operation

■ Timing Chart

H3CA-A (FA)

ON-delay Operation (A Mode)

Signal Start

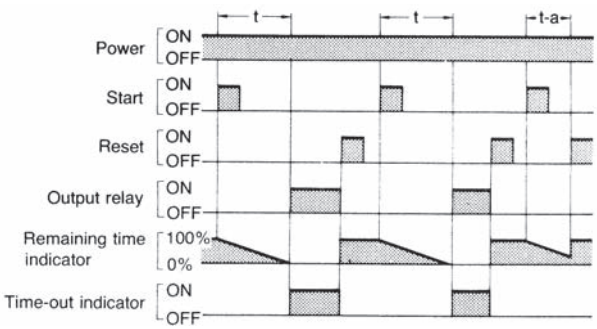

t: Set time; t-a: Time within the set time

Note: The minimum signal input time is 0.05 s.

Power-ON Start/Power-OFF Reset

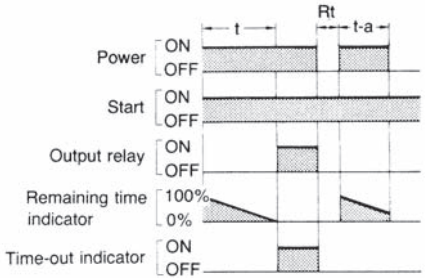

t: Set time; R: Resetting time; t-a: Time within the set time

Flicker Operation (B Mode)

Signal Start

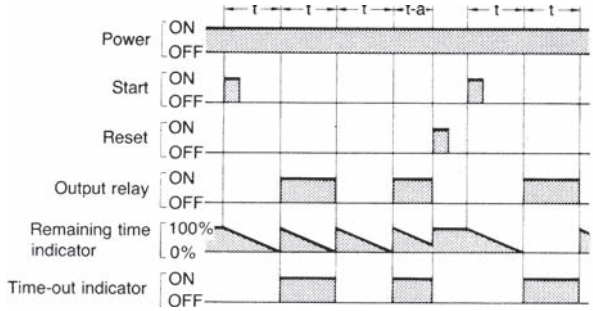

t: Set time; t-a: Time within the set time

Note: The minimum signal input time is 0.05 s.

Power-ON Start/Power-OFF Reset

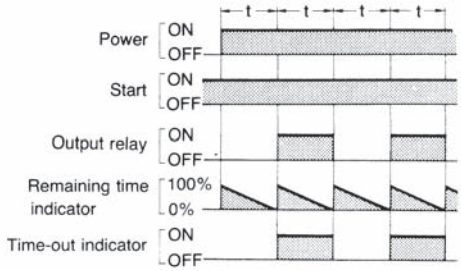

t: Set time

Signal ON/OFF-delay Operation 1 (C Mode)

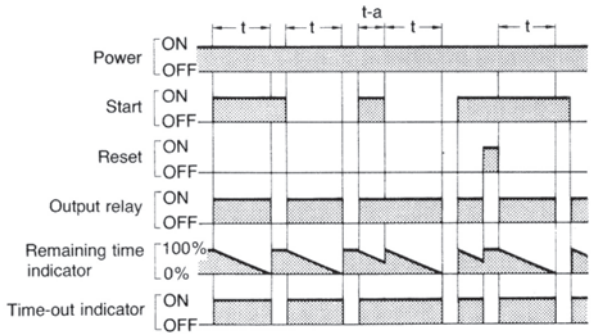

t: Set time; t-a: Time within the set time

Signal OFF-delay Operation 1 (D Mode)

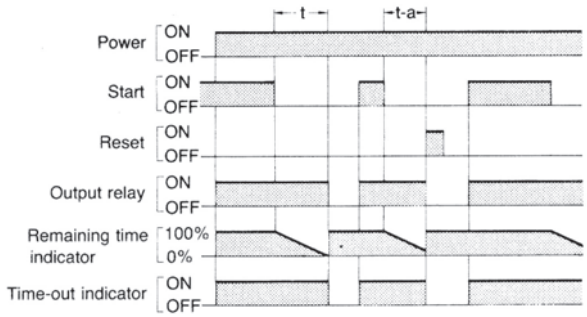

t: Set time; t-a: Time within the set time

Note: 1. The minimum signal input time is 0.05 s.
2. Operation 1 refers to the version in which the output relay operates when the Start signal is ON.

Interval Operation (E Mode)

Signal Start

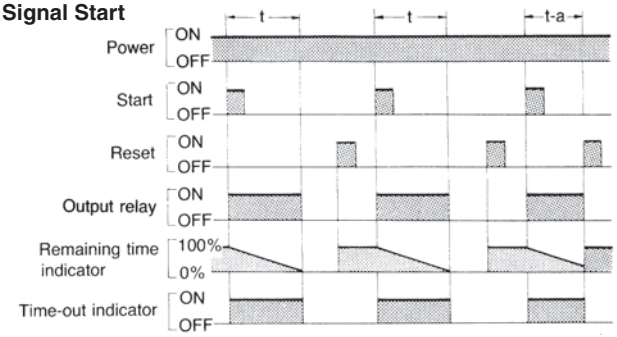

t: Set time; t-a: Time within the set time

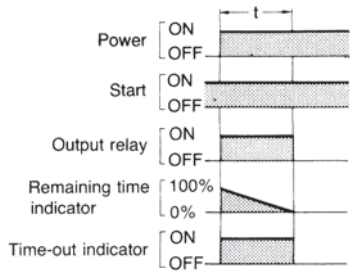

t: Set time

Note: The minimum signal input time is 0.05 s.

One-shot and Flicker Operation (F Mode)

Signal Start

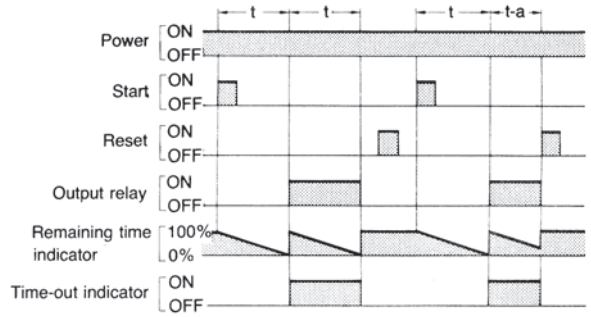

t: Set time; t-a: Time within the set time

Note: The minimum signal input time is 0.05 s.

Power-ON Start/Power-OFF Reset

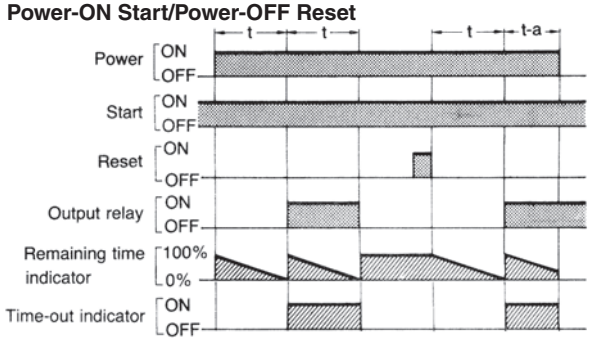

t: Set time; t-a: Time within the set time

Note: The minimum signal input time is 0.05 s.

Signal ON/OFF-delay Operation 2 (G Mode)

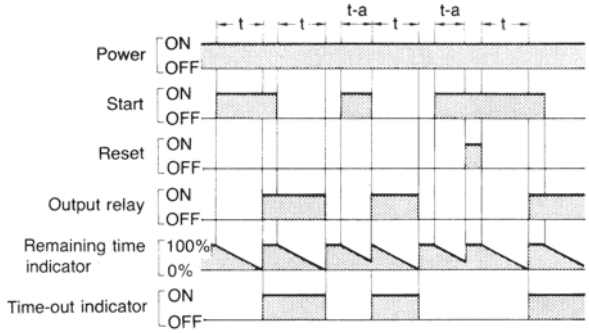

t: Set time; t-a: Time within the set time

Signal ON/OFF-delay Operation 2 (H Mode)

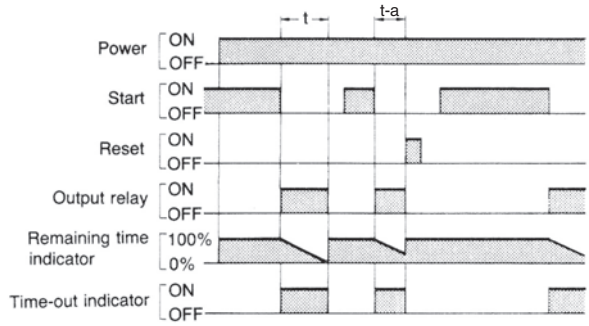

t: Set time; t-a: Time within the set time

Note: 1. The minimum signal input time is 0.05 s.
2. Operation 2 refers to the version in which the output relay does not operate when the Start signal is ON.

How to Use Gate Signal Input

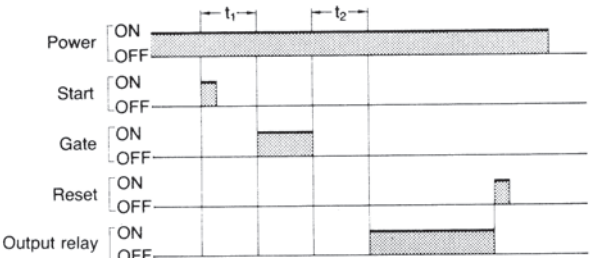

Note: 1. This timing chart indicates the gate input in operation mode A (ON-delay operation).
2. The set time is the sum of t_1 and t_2.

How to Use Check Signal Input

If a check signal is input to the timer during the lapse of a set time, the remaining set time will become 0 and the timer will enter the next control state. Also, while a check signal is being input, the elapsed time measurement of the set time is not performed.

ON-delay Operation

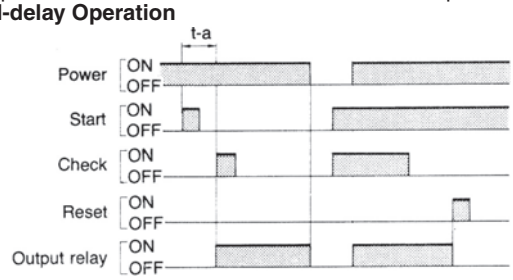

t: Set time; t-a: Time within the set time

Repeat Cycle Operation

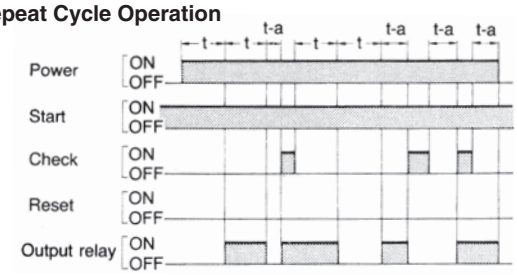

t: Set time; t-a: Time within the set time

H3CA-8H

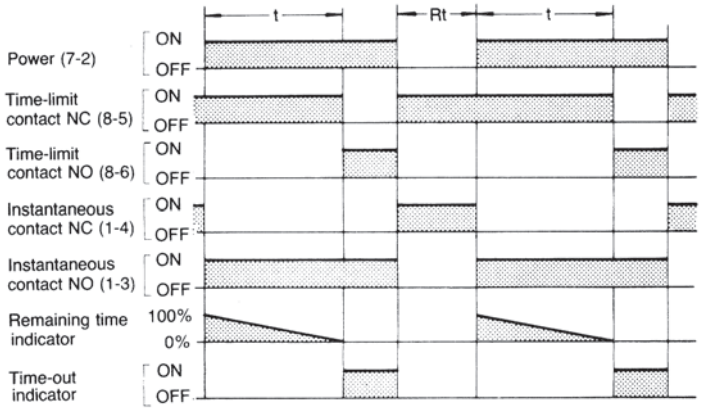

Dimensions

Note: All units are in millimeters unless otherwise indicated.

■ Timers

H3CA-A/-8H

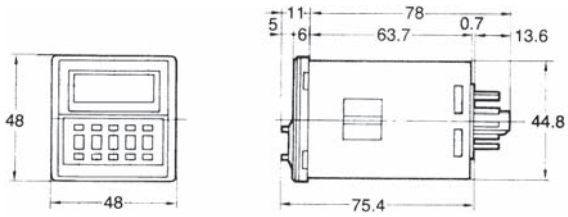

H3CA-FA

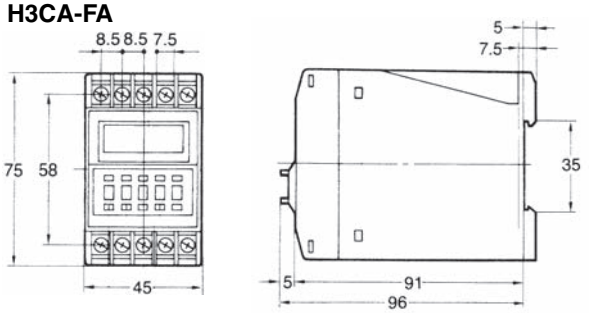

Panel Cutouts

When mounting a single unit
t = 1 to 3.2 mm

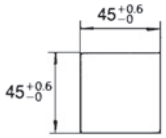

Horizontally connecting n units
No front cover:
$N = (48n - 2.5)^{+1}/_{-0}$
With front cover:
$N = \{48n - 2.5 + (n - 1) \times 3\}^{+1}/_{-0}$

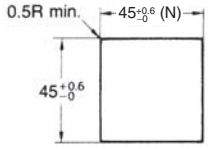

Mounting Holes

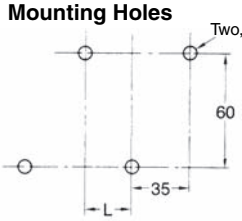

Note: When mounting two or more timers in line, dimension L between two adjacent timers should be 10 mm min.

■ Accessories (Order Separately)

Track Mounted Front Connecting Socket

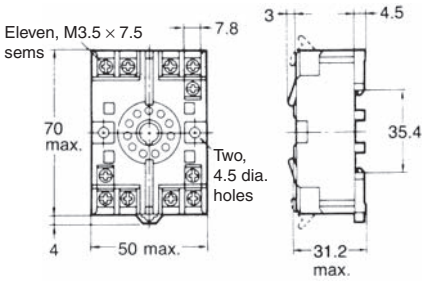

Terminal Arrangement (Top View)

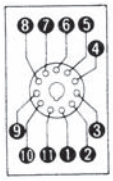

Mounting Holes

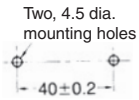

Note1: P2CF-11 can be used as a front connecting socket.

Note2: There are no restrictions to the mounting direction.

Mounting Height of Timer with Socket

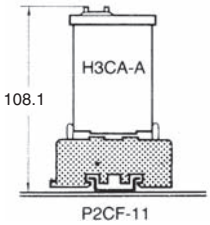

P2CF-08

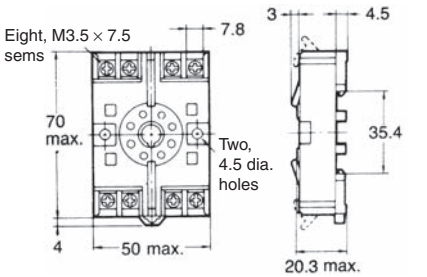

Terminal Arrangement (Top View)

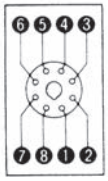

Mounting Holes

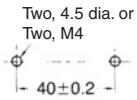

Note1: P2CF-08 can be used as a front connecting socket.

Note2: There are no restrictions to the mounting direction.

Mounting Height of Timer with Socket

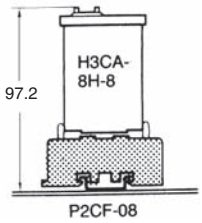

Back Connecting Socket

P3GA-11

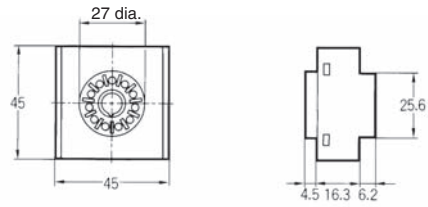

Terminal Arrangement (Bottom View)

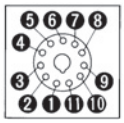

P3G-08

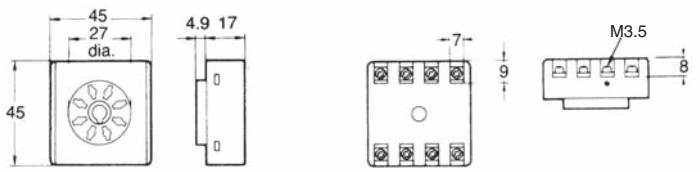

Terminal Arrangement (Bottom View)

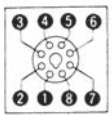

Mounting Height of Timer with Socket

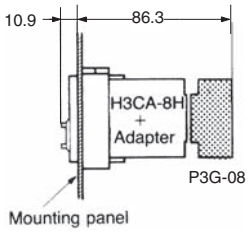

PL11

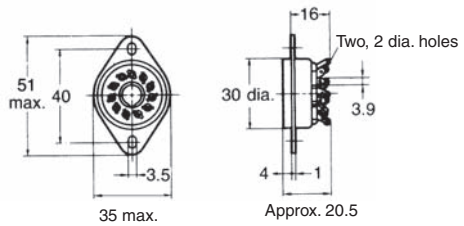

Terminal Arrangement (Bottom View)

Mounting Holes

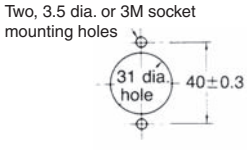

Mounting Height of Timer with Socket

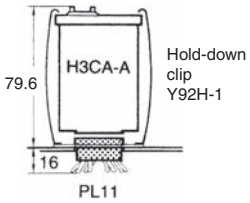

PL08

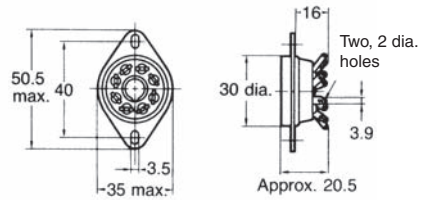

Terminal Arrangement (Bottom View)

Mounting Holes

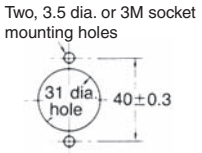

Note: There are no restrictions to the mounting direction.

Mounting Height of Timer with Socket

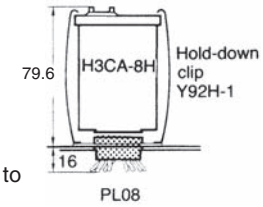

Mounting Track (Meets DIN EN50022)

PFP-100N/PFP-50N

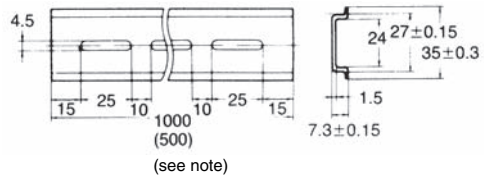

Note: This dimension applied to PFP-50N.

PFP-100N2

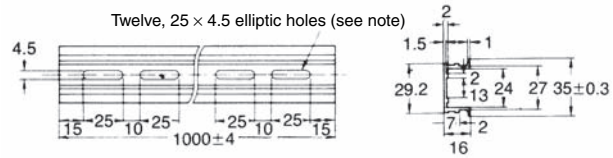

Note: A total of 12-25 × 4.5 elliptic holes are provided with 6 holes cut from each rail end at a pitch of 10 mm between holes.

End Plate

PFP-M

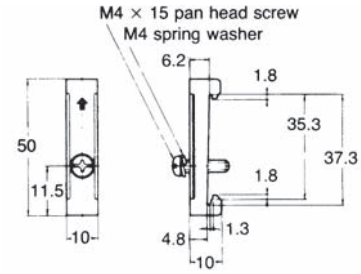

PFP-S

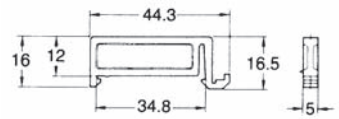

Adapter for Flush Mounting

Y92F-30

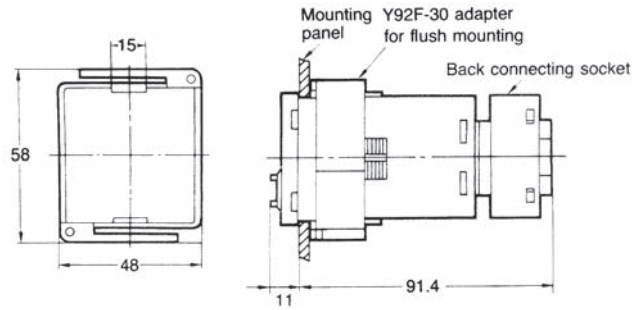

Note: Pay attention to the orientation of the adapter when mounting two or more timers in a vertical or horizontal line.

Protective Cover

Y92A-48B/Y92A-48D

The protective cover protects the front panel, particularly the time setting section, against dust, dirt and water drip, as well as prevents the set value from being altered due to accidental contact with the time setting knob.

Y92A-48B
Hard Plastic Cover

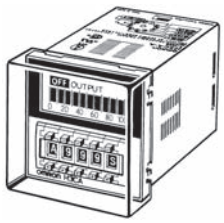

Y92A-48D
Soft PVC Cover

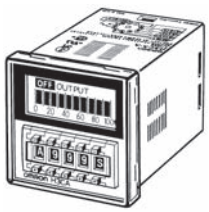

Note: The Y92A-48B Protective Cover is made of a hard plastic and therefore, must be removed to change the timer set value. However, since the Y92A-48D Protective Cover is made of PVC, the set value can be altered by pressing on the surface of the cover.
It may be, however, difficult to make setting changes of the Timer with the Y92A-48B Protective Cover attached, which must be taken into consideration before using the Y92A-48B Protective Cover.
When attaching the Y92A-48A to the Timer to be panel-mounted, use the Y92F-30 Mounting Adapter along with the Timer.
The Protective Cover cannot be, however, used for the H3CA-FA Series.

Installation

■ Terminal Arrangement

H3CA-A

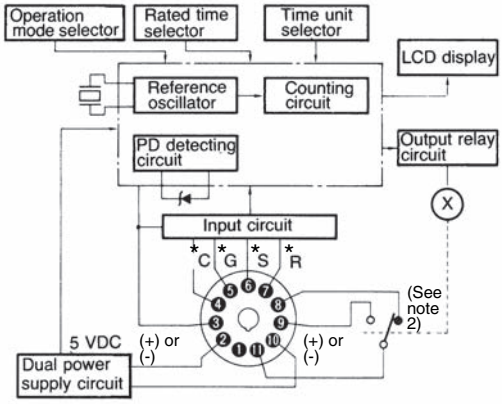

Note: 1. *C: Check: 3-4
*G: Gate: 3-5
*S: Start: 3-6
*R: Reset: 3-7
2. Conventional time-limit contacts are symbolized as . However, the contacts of H3CA-A are symbolized as because timer has 8 operation modes.

H3CA-FA

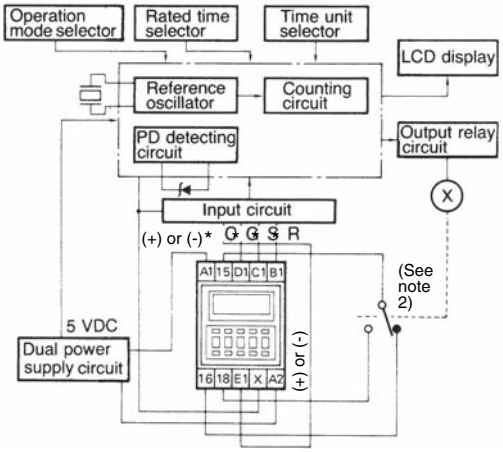

Note: 1. *C: Check: X-E1
*G: Gate: X-D1
*S: Start: X-C1
*R: Reset: X-B1
2. Conventional time-limit contacts are symbolized as . However, the contacts of H3CA-FA are symbolized as because timer has 8 operation modes.

■ Input Connections

Signal Inputs

Connect the start input contact between terminals ③ and ⑥, the reset input contact between terminals ③ and ⑦, the gate input contact between terminals ③ and ⑤, and the check input contact between terminals ③ and ④.

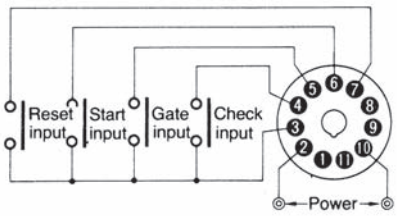

For each signal input contact, use a gold-plated contacts with high reliability. Be sure that these input signals satisfy the following requirements: a resistance of 1 kΩ (max.) and a residual voltage of 1 V (max.) when the contact is made.

Solid-state Signal Inputs

Connect the start input transistor between terminals ③ and ⑥, the reset input transistor between terminals ③ and ⑦, the gate input transistor between terminals ③ and ⑤, and the check input transistor between terminals ③ and ④.

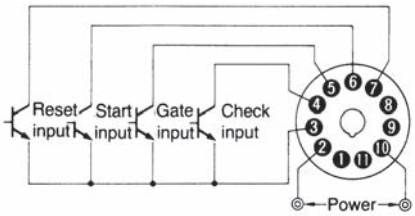

For signal input, use an open collector type transistor with characteristics: V_{CEO} = 20 V min., $V_{CE(S)}$ = 1 V max., IC = 50 mA min. and I_{CBO} = 0.5 μA max. In addition, be sure that the input signals satisfy the following requirements: a resistance of 1 kΩ (max.) and a residual voltage of 1 V (max.) when the transistor is ON, and a resistance of 200 kΩ (min.) when the transistor is OFF.

From a solid-state circuit (proximity sensor, photoelectric sensor, or the like) with rated power supply voltage ranging from 6 to 30 VDC, input signals can also be applied by other than an open collector type transistor as shown in the following diagram. The input signal from a solid-state circuit is applied when output transistor Tr turns ON. In terms of signal voltage, the signal is input when it goes from a high to low level. Again, the residual voltage should be 1 V (max.) when the transistor is ON. As the current output from the timer to Tr is approximately 0.1 mA, this connection is possible provided the residual voltage is kept to a maximum of 1 V.

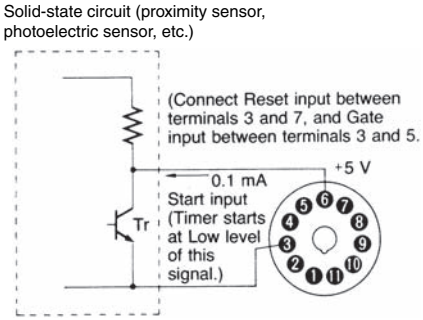

Note: Except for the power supply circuitry, avoid the laying of input signal wires in parallel or in the same conduit with high-tension or power lines. It is recommended to use shielded wires or wiring with independent metal conduits for the shortest possible distance.

H3CA-8H

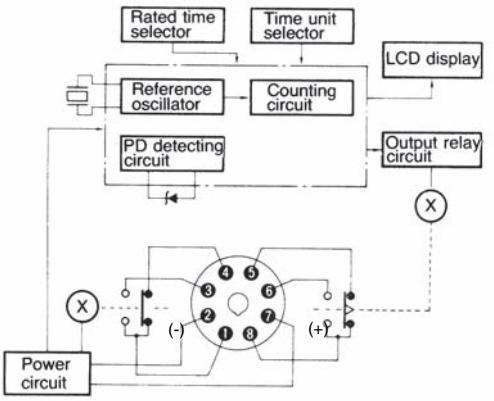

H3CA-8

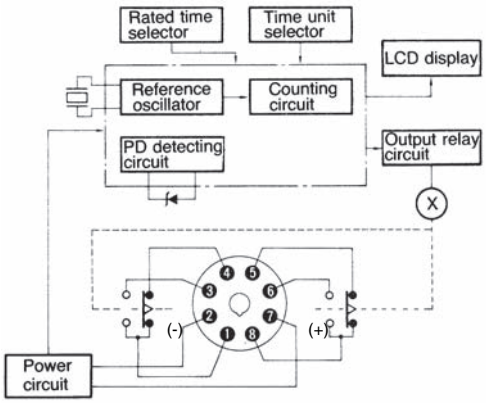

■ Application Examples

Standard type H3CA is used for the following application examples. In the schematic diagrams, each thick the indicates the wiring necessary for selecting the desired operation mode.

ON-delay Operation (A Mode)

Power-ON Start/Power-OFF Reset

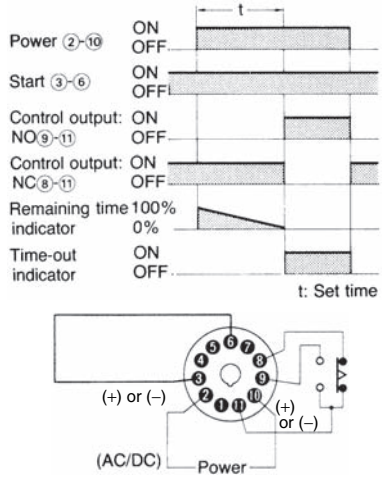

Signal Start/Signal Reset

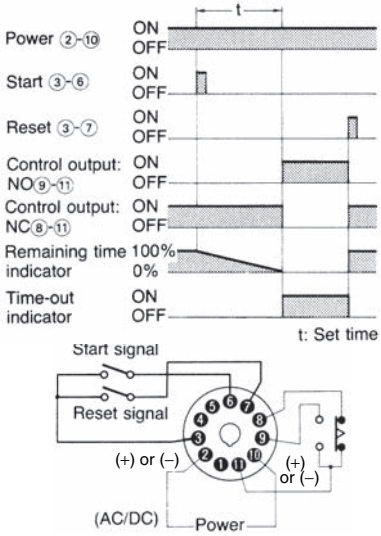

Flicker Operation (B Mode)

Power-ON Start/Power-OFF Reset

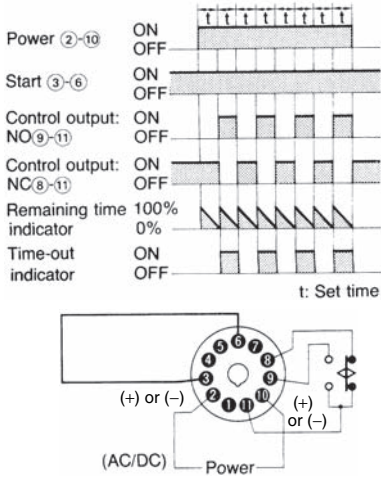

Signal Start/Signal Reset

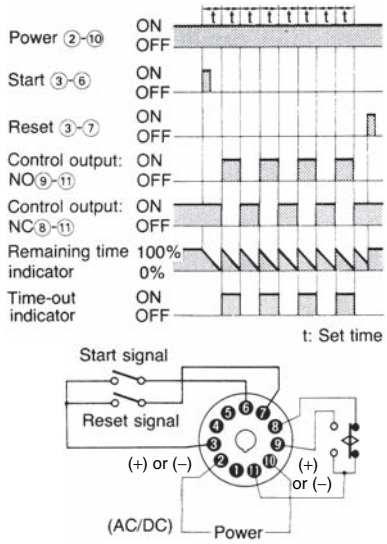

Signal ON/OFF-delay Operation 1 (C Mode)

Signal ON/OFF-start/Instantaneous Operation/ Time-limit Reset

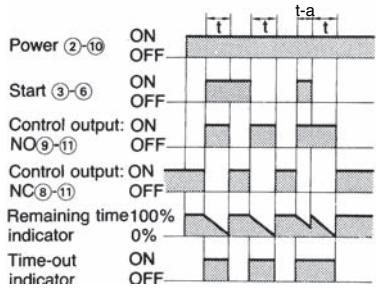

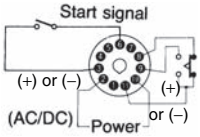

t: Set time, t-a: Time within the set time

Signal OFF-delay Operation 1 (D Mode)

Signal Start/Instantaneous Operation/Time-limit Reset

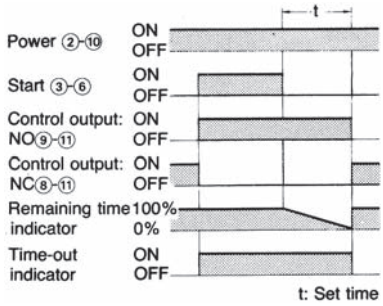

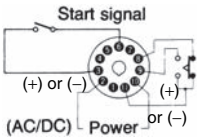

Signal ON/OFF-delay Operation 2 (G Mode)

Signal ON/OFF-start/Instantaneous Operation/ Time-limit Reset

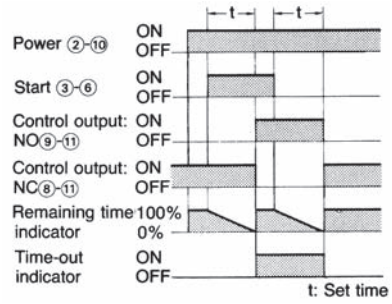

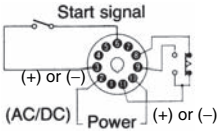

Signal Start/Signal Reset

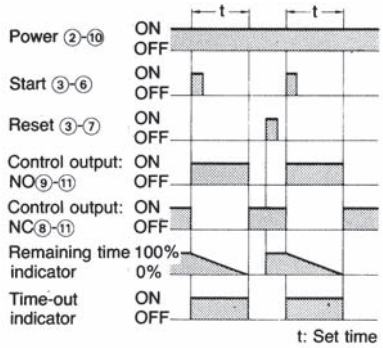

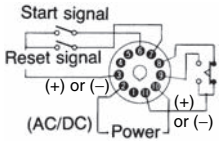

Interval Operation (E Mode)

Power-ON Start/Power-OFF Reset

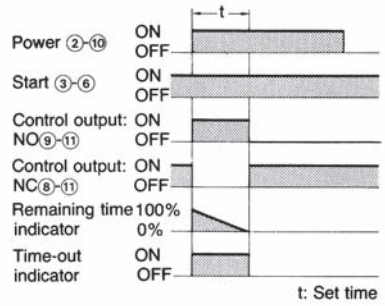

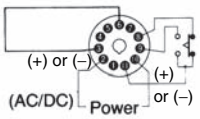

Signal Start/Signal Reset

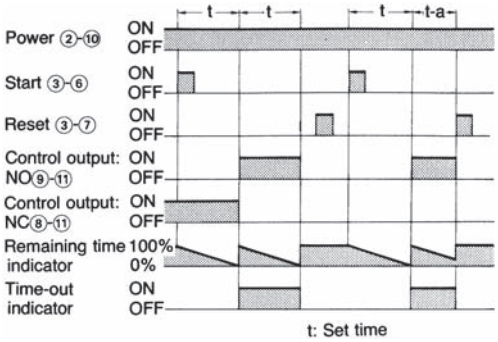

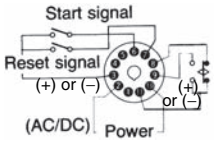

One-shot and Flicker Operation (F Mode)

Power-ON Start/Power-OFF Reset

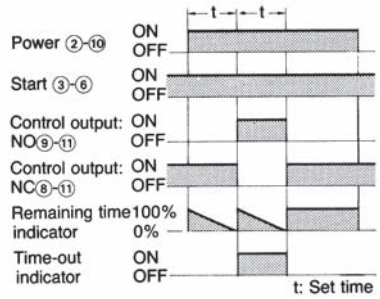

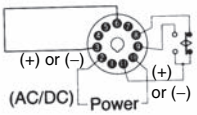

Signal OFF-delay Operation 2 (H Mode)

Signal/Instantaneous Operation/Time-limit Reset

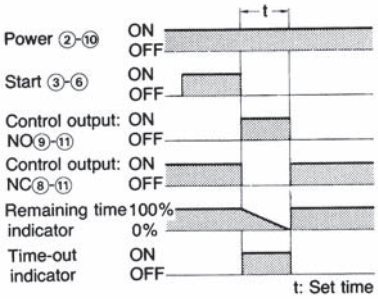

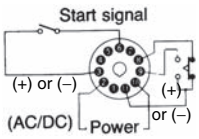

Safety Precautions

How to Change Operation Mode

Operate the pushbuttons of the thumbwheel switch, located at the leftmost position on the front panel to set the operation mode. Eight operation modes (A, B, C, D, E, F, G, and H) are selectable and the selected operation mode is displayed in the operation mode display window.
A and B are included twice, but the functions are the same.

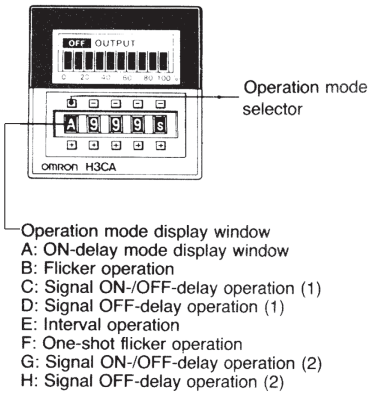

Note: The operation mode is fixed to "A" for H3CA-8H. The characters are yellow.

How to Change Time Unit and Rated Time

Operate the pushbuttons of the rightmost thumbwheel switch to select the desired time unit. Seven time units (0.1 s, s, 0.1 m, m, 0.1 h, h, or 10 h) are selectable and the selected time unit is displayed in the time unit display window. However, due to the number of rotations for each thumbwheel switch, in practice the units switch in the following order: 0.1 s → s → 0.1 s → s → 0.1 m → m → 0.1 h → h → h → 10 h. The desired rated time is specified by operating the three thumbwheel switches in the middle of the front panel. The range of rated time is 001 to 999 for each unit.
0.1 s, s, and h are included twice, but the functions are the same.

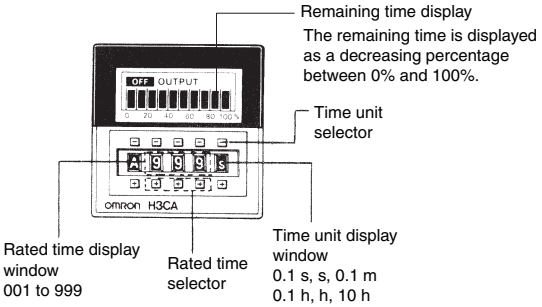

Note: The characters are yellow.

Time Unit and Rated Time

Time unit	Rated time
0.1 s	0.1 to 99.9 s
s	1 to 999 s
0.1 m	0.1 to 99.9 m
m	1 to 999 m
0.1 h	0.1 to 99.9 h
h	1 to 999 h
10 h	10 to 9,990 h

⚠ CAUTION

1. Do not change the time unit, rated time, or operation mode while the timer is in operation. Otherwise, the timer may malfunction or be damaged. Be sure to turn off the power supply to the timer before changing the timer unit, rated time or operation mode.
2. Note that output will be generated in C, D, E, G, or H mode even if the rated time is set to 000. No output will be generated in A, B, or F mode.

Connecting the Operating Power Supply

The H3CA-8□ contains a capacitor-drop power circuit. Use a sinusoidal power supply with a commercial frequency. Do not use power supplies with a high frequency component (such as inverter power supplies) for Timers with 100 to 240-VAC specifications. Using these power supplies can damage internal circuits.

The power supply connections to the H3CA-A and H3CA-FA can be made without regard to polarity for both AC and DC power supplies; just connect to the specified terminals (2 and 10, or A1 and A2). When connecting a DC power supply to the H3CA-8 or H3CA-8H, however, the polarity must be connected as indicated.

Although there is a wide range of power connectable to the H3CA-A and H3CA-FA, be sure that there is no inductive voltage or residual voltage applied to the timer power supply terminals (2 and 10, or A1 and A2) when the power switch is turned OFF. (Inductive voltage can be generated in the power supply line if it is placed in parallel with high-voltage or power lines.)

A DC power supply can be connected if its ripple factor is 20% or less and the mean voltage is within the rated operating voltage range of the Timer.

Connect the power supply voltage through a relay or switch in such a way that the voltage reaches a fixed value at once or the Timer may not be reset or a timer error could result.

H3CA-8 and H3CA-8H Timers with AC specifications are equivalent to capacitor loads. When switching the Timer power supply with an SSR, use an SSR with a withstand voltage of twice the power supply voltage.

Since the H3CA-8 and H3CA-8H Timers of AC specifications externally discharges a part of internal energy when the power is turned OFF, it may malfunction if an extremely sensitive relay is used with the following sequence circuit.
If such a malfunction occurs, change the circuit configuration as shown below on the right side.

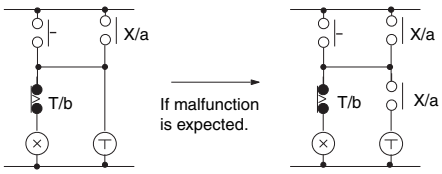

Input/Output

The operation of the output contacts varies with the operation specifications. Before making connections, check the operation specifications and operating conditions using the application examples provided.

The H3CA-A and H3CA-FA do not use transformers. Simultaneous inputting power from two or more power supplies to separate timers or counters from a single input contact or transistor is not possible.

For the power supply of an input device, use an isolating transformer, of which the primary and secondary windings are mutually isolated and the secondary winding is not grounded.

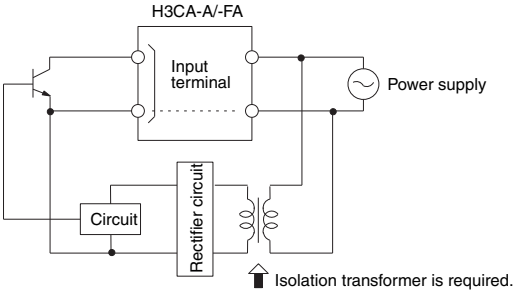

A transformer is not used in the power supplies for the H3CA-A and H3CA-FA. You can therefore receive an electrical shock by touching the input terminals when the power supply voltage is being applied. Take adequate precautions to protect against electrical shock.

Inputs to input signal terminals are made by shorting the individual input terminals to the common terminal (terminal 3 for the H3CA-A or terminal (X) for the H3CA-FA). Internal circuits may be damaged if connections are made to any other terminals or if voltages are applied.
If contacts are used to short the terminals, they will be switching a low voltage (approximately 5 VDC) and current (approximately 100 μA). You must therefore use high-reliability contacts with a contact resistance of 1 kΩ or less when shorted and residual voltage of 1 V maximum when shorted.

The reset input will take priority if both the set and reset inputs are turned ON simultaneously.

Others

Holding relays are used for outputs on the H3CA-A Series. Dropping the Unit or otherwise subjecting it to shock can cause the relay to reverse or to move to the center position.

How to Mount the Timer on Mounting Track

When mounting a H3CA-FA Timer on a socket mounting track, observe the following procedures:

Mounting

First hook portion A of the timer to an edge of the track and then depress the timer in direction B.

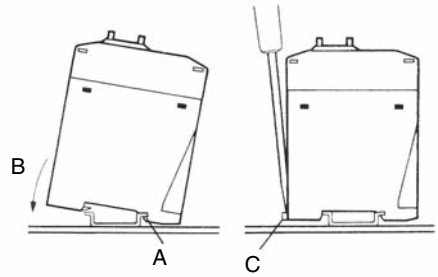

Dismounting

Pull out portion C with a round-blade screwdriver and remove the timer from the mounting track.

ALL DIMENSIONS SHOWN ARE IN MILLIMETERS.
To convert millimeters into inches, multiply by 0.03937. To convert grams into ounces, multiply by 0.03527.

In the interest of product improvement, specifications are subject to change without notice.

Terms and Conditions Agreement

Read and understand this catalog.
Please read and understand this catalog before purchasing the products. Please consult your OMRON representative if you have any questions or comments.

Warranties.
(a) Exclusive Warranty. Omron's exclusive warranty is that the Products will be free from defects in materials and workmanship for a period of twelve months from the date of sale by Omron (or such other period expressed in writing by Omron). Omron disclaims all other warranties, express or implied.
(b) Limitations. OMRON MAKES NO WARRANTY OR REPRESENTATION, EXPRESS OR IMPLIED, ABOUT NON-INFRINGEMENT, MERCHANTABILITY OR FITNESS FOR A PARTICULAR PURPOSE OF THE PRODUCTS. BUYER ACKNOWLEDGES THAT IT ALONE HAS DETERMINED THAT THE
PRODUCTS WILL SUITABLY MEET THE REQUIREMENTS OF THEIR INTENDED USE.
Omron further disclaims all warranties and responsibility of any type for claims or expenses based on infringement by the Products or otherwise of any intellectual property right. (c) Buyer Remedy. Omron's sole obligation hereunder shall be, at Omron's election, to (i) replace (in the form originally shipped with Buyer responsible for labor charges for removal or replacement thereof) the non-complying Product, (ii) repair the non-complying Product, or (iii) repay or credit Buyer an amount equal to the purchase price of the non-complying Product; provided that in no event shall Omron be responsible for warranty, repair, indemnity or any other claims or expenses regarding the Products unless Omron's analysis confirms that the Products were properly handled, stored, installed and maintained and not subject to contamination, abuse, misuse or inappropriate modification. Return of any Products by Buyer must be approved in writing by Omron before shipment. Omron Companies shall not be liable for the suitability or unsuitability or the results from the use of Products in combination with any electrical or electronic components, circuits, system assemblies or any other materials or substances or environments. Any advice, recommendations or information given orally or in writing, are not to be construed as an amendment or addition to the above warranty.
See http://www.omron.com/global/ or contact your Omron representative for published information.

Limitation on Liability; Etc.
OMRON COMPANIES SHALL NOT BE LIABLE FOR SPECIAL, INDIRECT, INCIDENTAL, OR CONSEQUENTIAL DAMAGES, LOSS OF PROFITS OR PRODUCTION OR COMMERCIAL LOSS IN ANY WAY CONNECTED WITH THE PRODUCTS, WHETHER SUCH CLAIM IS BASED IN CONTRACT, WARRANTY, NEGLIGENCE OR STRICT LIABILITY.
Further, in no event shall liability of Omron Companies exceed the individual price of the Product on which liability is asserted.

Suitability of Use.
Omron Companies shall not be responsible for conformity with any standards, codes or regulations which apply to the combination of the Product in the Buyer's application or use of the Product. At Buyer's request, Omron will provide applicable third party certification documents identifying ratings and limitations of use which apply to the Product. This information by itself is not sufficient for a complete determination of the suitability of the Product in combination with the end product, machine, system, or other application or use. Buyer shall be solely responsible for determining appropriateness of the particular Product with respect to Buyer's application, product or system. Buyer shall take application responsibility in all cases.
NEVER USE THE PRODUCT FOR AN APPLICATION INVOLVING SERIOUS RISK TO LIFE OR PROPERTY OR IN LARGE QUANTITIES WITHOUT ENSURING THAT THE SYSTEM AS A WHOLE HAS BEEN DESIGNED TO ADDRESS THE RISKS, AND THAT THE OMRON PRODUCT(S) IS PROPERLY RATED AND INSTALLED FOR THE INTENDED USE WITHIN THE OVERALL EQUIPMENT OR SYSTEM.

Programmable Products.
Omron Companies shall not be responsible for the user's programming of a programmable Product, or any consequence thereof.

Performance Data.
Data presented in Omron Company websites, catalogs and other materials is provided as a guide for the user in determining suitability and does not constitute a warranty. It may represent the result of Omron's test conditions, and the user must correlate it to actual application requirements. Actual performance is subject to the Omron's Warranty and Limitations of Liability.

Change in Specifications.
Product specifications and accessories may be changed at any time based on improvements and other reasons. It is our practice to change part numbers when published ratings or features are changed, or when significant construction changes are made. However, some specifications of the Product may be changed without any notice. When in doubt, special part numbers may be assigned to fix or establish key specifications for your application. Please consult with your Omron's representative at any time to confirm actual specifications of purchased Product.

Errors and Omissions.
Information presented by Omron Companies has been checked and is believed to be accurate; however, no responsibility is assumed for clerical, typographical or proofreading errors or omissions.

2020.5

In the interest of product improvement, specifications are subject to change without notice.

OMRON Corporation
Industrial Automation Company

http://www.ia.omron.com/

(c)Copyright OMRON Corporation 2020 All Right Reserved.