CUI Devices is now Same Sky! Learn More



# MODEL: GF1207 | DESCRIPTION: SPEAKER

## FEATURES

- 137.5 mm
- round frame
- 5.0 W
- 8 Ω
- ferrite magnet
- paper cone

## SPECIFICATIONS

| parameter | conditions/description | min | typ | max | units |
|---|---|---|---|---|---|
| input power | | | 5.0 | 10.0 | W |
| impedance | at 0.6 kHz, 1.0 V | 6.8 | 8 | 9.2 | Ω |
| resonant frequency (Fo) | at 1.0 V | 88 | 160 | 232 | Hz |
| frequency response | | Fo | | 8,000 | Hz |
| sound pressure level | at 1.0 W, 50 cm, avg at 0.5, 0.6, 0.8, 1.0 kHz | 93 | 96 | 99 | dB |
| buzz, rattle, etc. | must be normal at sine wave | | 6.3 | | V |
| dimensions | Ø137 x 31.5 | | | | mm |
| magnet | ferrite | | | | |
| cone material | paper | | | | |
| terminal | solder eyelets | | | | |
| weight | | | 307.0 | | g |
| operating temperature | | -25 | | 70 | °C |
| hand soldering | for maximum 5 seconds | 400 | 420 | 440 | °C |
| RoHS | yes | | | | |

## MECHANICAL DRAWING

units: mm
tolerance: ±0.8 mm

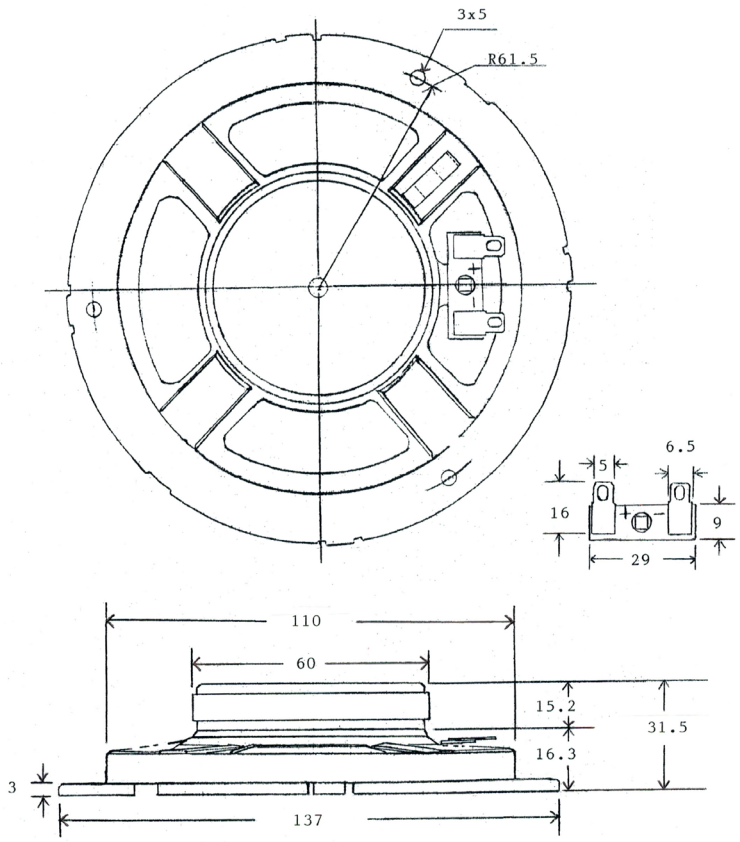


## FREQUENCY RESPONSE CURVE

| parameter | conditions/description |
|---|---|
| potentiometer range | 50 dB |
| rectifier | RMS |
| lower limit frequency | 20 Hz |
| wr. speed | 100 mm/sec |
| zero level | 60 dB |

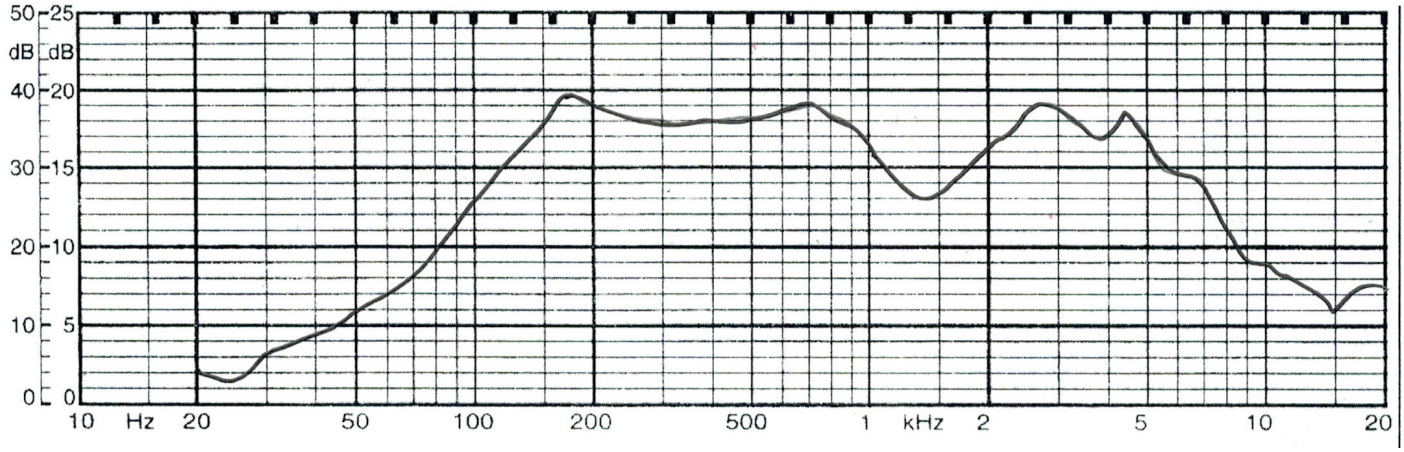

## REVISION HISTORY

| rev. | description | date |
|---|---|---|
| 1.0 | initial release | 01/20/2003 |
| 1.01 | brand update | 02/17/2020 |
| 1.02 | logo, datasheet style update | 08/05/2022 |
| 1.03 | CUI Devices rebranded to Same Sky | 09/11/2024 |

The revision history provided is for informational purposes only and is believed to be accurate.

Same Sky offers a one (1) year limited warranty. Complete warranty information is listed on our website.

Same Sky reserves the right to make changes to the product at any time without notice. Information provided by Same Sky is believed to be accurate and reliable. However, no responsibility is assumed by Same Sky for its use, nor for any infringements of patents or other rights of third parties which may result from its use.

Same Sky products are not authorized or warranted for use as critical components in equipment that requires an extremely high level of reliability. A critical component is any component of a life support device or system whose failure to perform can be reasonably expected to cause the failure of the life support device or system, or to affect its safety or effectiveness.