DC-Busbar EMC/RFI Filter for EV charging

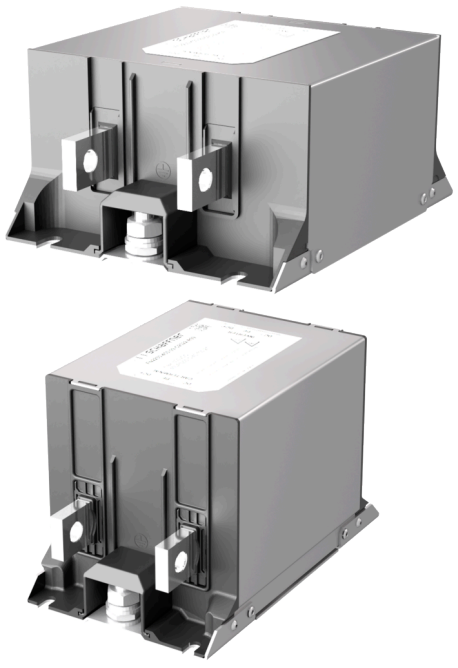

- Designed for usage in EV charging applications
- Ultra-compact filter
- Multiple performance options
- Design acc. to EV charging safety standards

Performance indicators

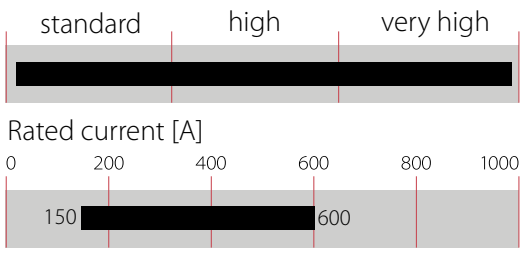

Approvals & Compliances

Features and Benefits

- FN222X, FN223X and FN224X series of filters provides state-of-the-art EMI attenuation with a choice of three performance levels
- The filters are built to fit perfectly to high power EV charging applications
- The shape allows a convenient and space-saving installation
- Fulfills the requirements in IEC/EN 61851-23 Electric vehicle conductive charging system
- Fulfills the requirements in UL 2202 Electric Vehicle (EV) Charging System Equipment
- FN224X offers voltage and performance ratings of FN222X on a smaller footprint

Typical Applications

- High Power EV DC charging beyond HPC350 (500 A @ 920 V)
- Two voltage levels 500 VDC and 1000 VDC
- Compatible to CHAdeMO and CCS

Technical Specifications

Maximum continuous operating voltage	500 VDC (FN223X) 1000 VDC (FN222X, FN224X)
Rated currents	250 to 2300 A @ 50°C
Overload capability	4x rated current at switch on, max. 8 sec 1.5x rated current for 1 minute, once per hour
High potential test voltage	P -> E 4800 VDC for 2 sec P -> P 3600 VDC for 2 sec
Overvoltage category	III acc. IEC 60664-1
Pollution degree	2 acc. IEC 60664-1
Surge withstand	2kV (P-P) / 4kV (3P - E) acc. to IEC 6100-4-5
Temperature range (operation and storage)	-40°C to +100°C
Climatic category	40/100/21 acc. to IEC 60068-1
Protection category	IP 00
Flammability corresponding to	UL 94V-0
Design corresponding to	UL 1283, CSA 22.2 No. 8 1986, IEC/EN 60939, EN 60721-3, EN 62109
MTBF (Mil-HB-217F)	>300,000 h @ 50°C/500V

Typical electrical schematic

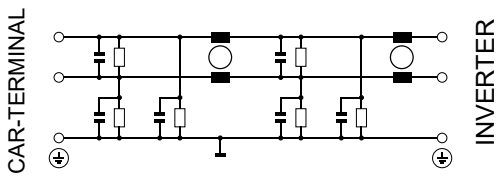

Filter Selection Table

Filter	Rated current @55°C [A]	Capacitance* [nF]		total equiv. capacitance to PE [nF]	Resistance* [MOhm]		Typical power dissipation @25°C/DC [W]	Weight approx. [kg]
		CY1	CY2		RX	RY		
1000 VDC - compact housing style								
High performance:								
FN2220-150-99-C2222-R99	150	330	330	990	10	10	6	3
FN2220-300-99-C2222-R99	300	330	330	990	10	10	14	3
FN2220-450-99-C2222-R99	450	330	330	990	10	10	14	3
FN2220-600-99-C2222-R99	600	330	330	990	10	10	25	3
Very high performance:								
FN2221-600-99-C2222-R99	600	330	330	990	10	10	25	3
500 VDC - compact housing style								
High performance:								
FN2230-150-99-C2022-R99	150	150	330	960	10	10	6	3
FN2230-300-99-C2022-R99	300	150	330	960	10	10	14	3
FN2230-450-99-C2022-R99	450	150	330	960	10	10	14	3
FN2230-600-99-C2022-R99	600	150	330	960	10	10	25	3
Very high performance:								
FN2231-600-99-C2022-R99	600	150	330	960	10	10	25	3
1000 VDC - slim housing style								
High performance:								
FN2240-150-99-C2222-R99	150	330	330	990	10	10	6	3
FN2240-300-99-C2222-R99	300	330	330	990	10	10	14	3
FN2240-450-99-C2222-R99	450	330	330	990	10	10	14	3
FN2240-600-99-C2222-R99	600	330	330	990	10	10	25	3
Very high performance:								
FN2241-600-99-C2222-R99	600	330	330	990	10	10	25	3

* Tolerances apply: Capacitance: ±20%, Resistance: ±10%

Product Selector*

FN22rs-ttt-uu-Cvvzz-Rxy

xy – X-capacitor discharger resistor: x = RX / y = RY (e.g. -R99)
9: 10 Mohm

vvzz – Y-capacitor option: vv = Y-capacitor CY1 / zz = Y-capacitor CY2 (e.g. -C2222)
22: 330 nF
20: 150 nF

uu – Electrical connection
99: Ni-plated busbar connection

ttt – Rated current
150: 150 A
300: 300 A
450: 450 A
600: 600 A

s – Performance
0: High performance (recommended for most applications)
1: Very high performance
2: Standard performance (on request)

r – Version
2: 1000 V – compact housing style
3: 500 V – compact housing style
4: 1000 V – slim housing style

*Filter can be adapted to specific requirements. Variations of resistor and capacitor values available on request.

Typical electrical schematic FN222X and FN224X (up to 1000 VDC)

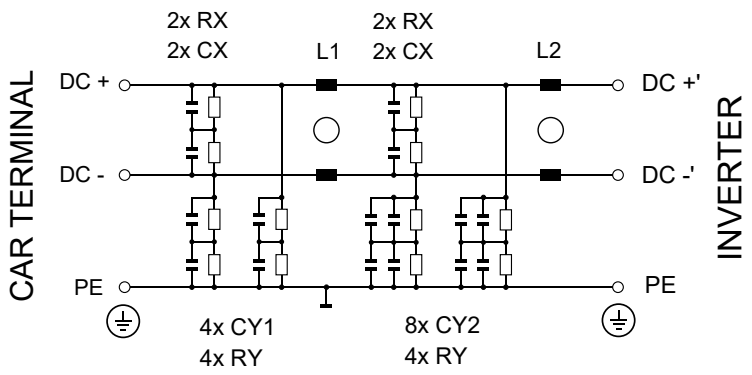

Typical electrical schematic FN223X (up to 500 VDC)

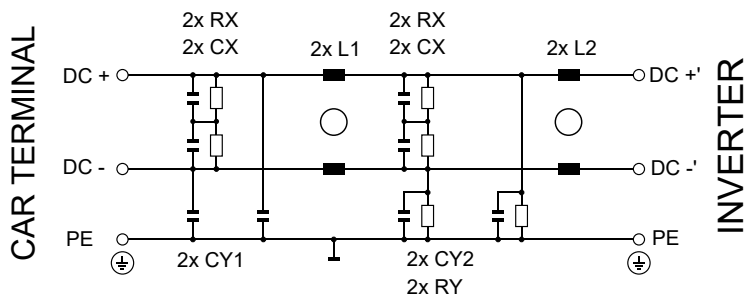

Typical Filter Attenuation

Per CISPR 17: symmetrical 50 Ω/50 Ω -> Differential Mode (DM); asymmetrical 50 Ω/50 Ω -> Common Mode (CM)

FN2220-ttt-uu-C2222-Rxy and FN2240-ttt-uu-C2222-Rxy

High Performance

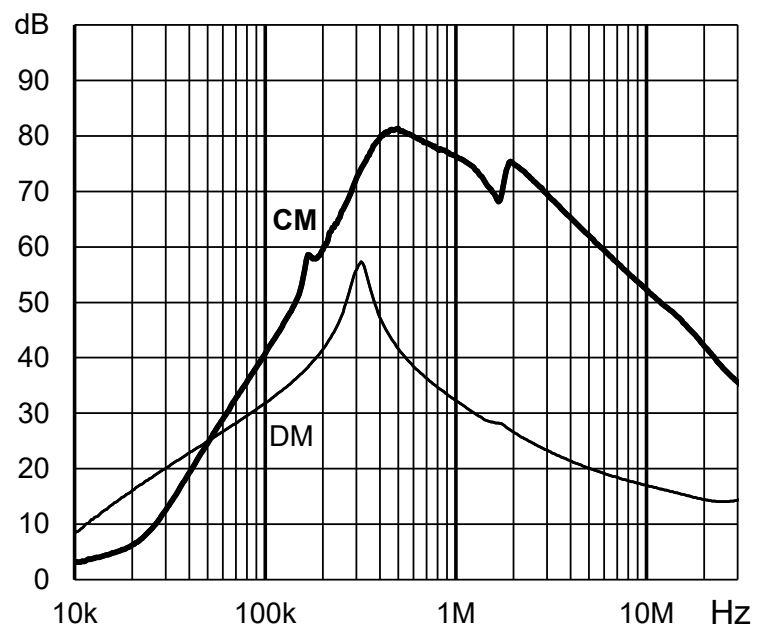

FN2221-ttt-uu-C2222-Rxy and FN2241-ttt-uu-C2222-Rxy

Very High Performance

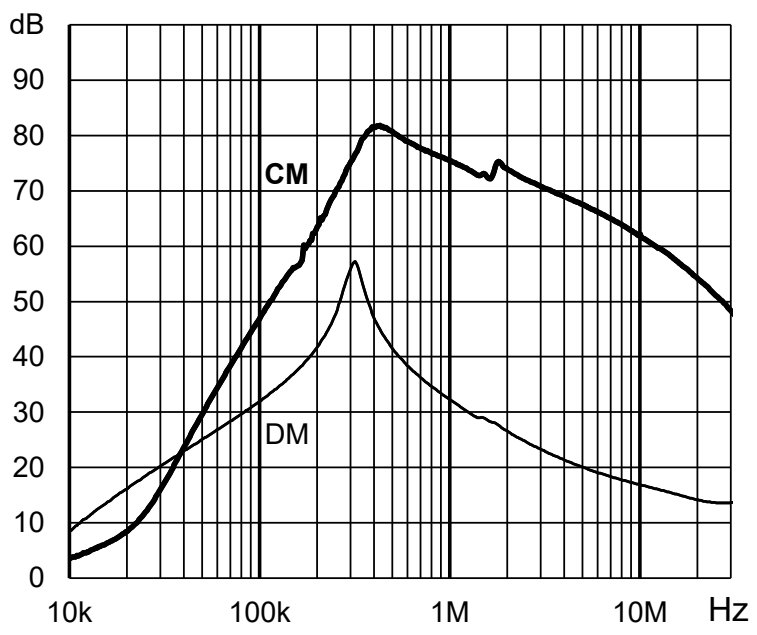

FN2230-ttt-uu-C2022-Rxy

High Performance

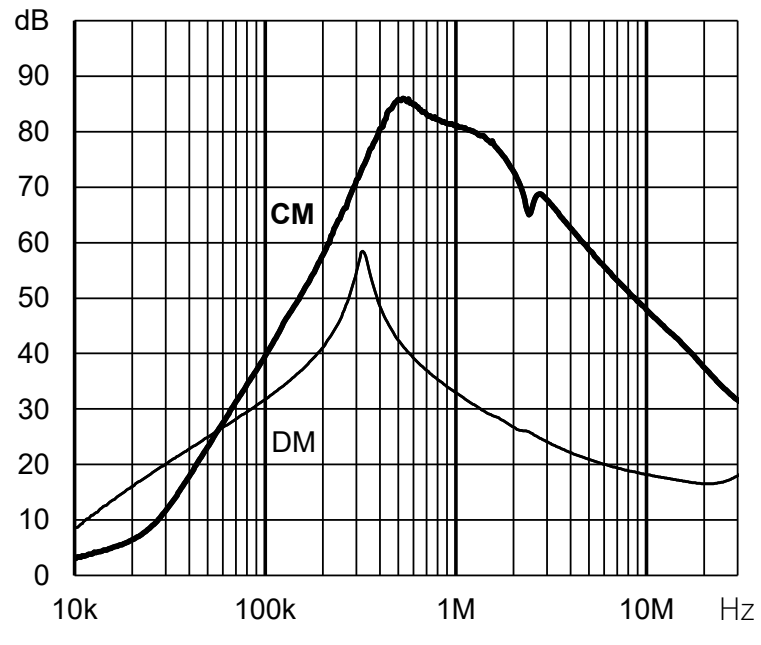

FN2231-ttt-uu-C2022-Rxy

Very High Performance

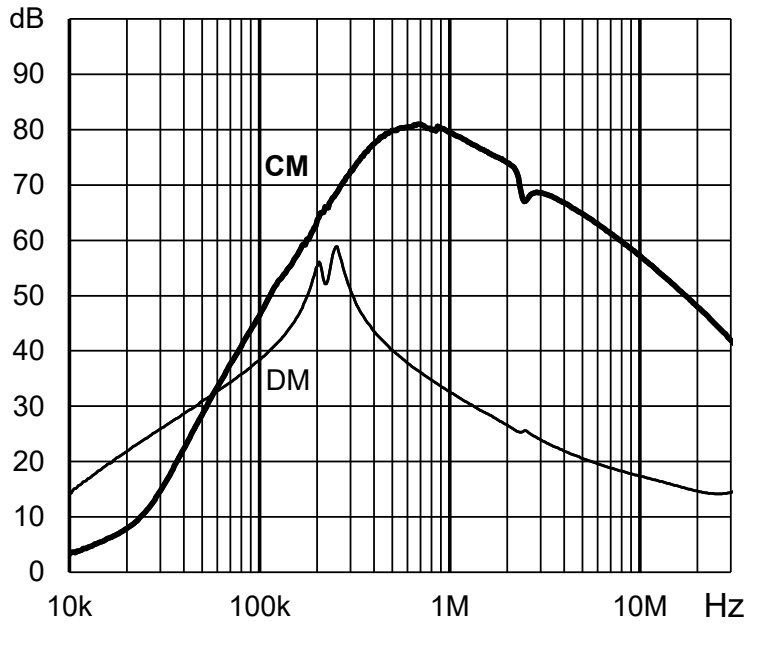

FN222X and FN223X

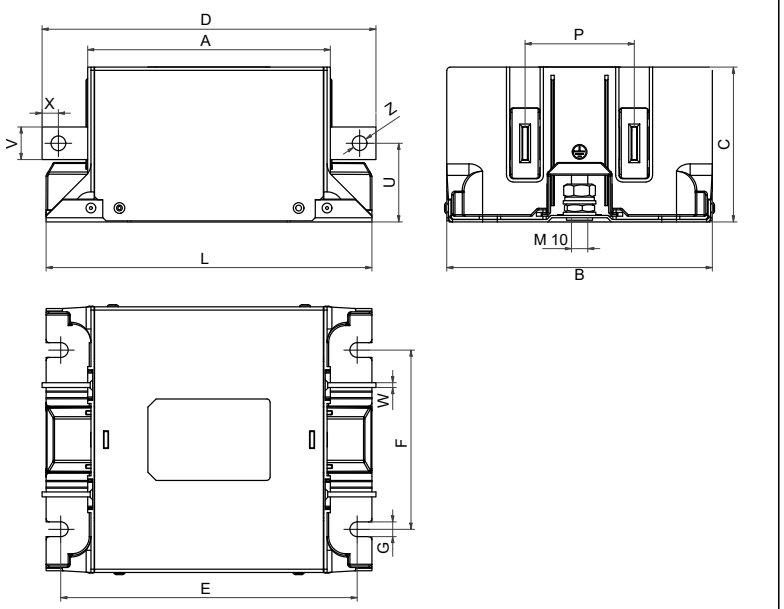

FN224X

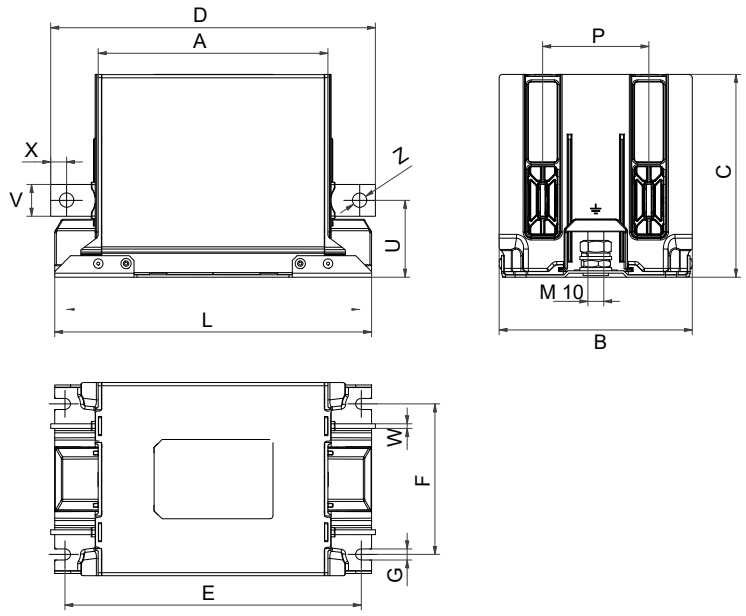

Dimensions*

	FN222X and FN223X				FN224X				
	150 A	**300 A**	**450 A**	**600 A**	**150 A**	**300 A**	**450 A**	**600 A**	**Tolerances**
A	145	145	145	145	145	145	145	145	±1
B	163	163	163	163	122	122	122	122	
C	95	95	95	95	128	128	128	128	±1
D	205	210	210	210	205	210	210	210	±2
E	182	182	182	182	187	187	187	187	
F	110	110	110	110	95	95	95	95	
G	9	9	9	9	7	7	7	7	
L	200	200	200	200	200	200	200	200	
P	67	67	67	67	67	67	67	67	±1
U	48	48	48	48	48	48	48	48	±1
V	20	25	25	25	20	25	25	25	
W	3	4	8	8	3	4	8	8	
X	10	12.5	12.5	12.5	10	12.5	12.5	12.5	
Z	9	11	11	11	9	11	11	11	

* All dimensions in mm. For dimensions without stated tolerances: ISO 2768-m/EN 22768-m applies.

We are here to help



Read more insights from TE's experts:

Schaffner is now part of TE Connectivity

Learn more about Corcom products

Connect With Us

We make it easier to connect with our experts and are ready to provide the support you need.
Visit **te.com/support** to chat with a Product Information Specialist.

Contact a TE expert today

te.com

©2025 TE Connectivity plc. All Rights Reserved.

TE Connectivity, TE, TE connectivity (logo), and EVERY CONNECTION COUNTS, ECOsine, Schaffner are trademarks owned or licensed by TE Connectivity plc. family of companies. All other logos, products and/or company names referred to herein might be trademarks of their respective owners.

While TE has made every reasonable effort to ensure the accuracy of the information in this document, TE does not guarantee that it is error-free, nor does TE make any other representation, warranty or guarantee that the information is accurate, correct, reliable or current. TE reserves the right to make any changes to the information contained herein without prior notice. TE Connectivity assumes only those obligations set forth in the terms and conditions for this product and shall in no event be liable for any incidental, indirect, or consequential damages arising out of the sale, resale, use, or misapplication of the product. TE expressly disclaims any implied warranties with respect to the information contained herein, including, but not limited to, implied warranties of merchantability or fitness for a particular purpose. Dimensions, specifications and/or information contained herein are for reference purposes only and are subject to change without notice. Consult TE for the latest dimensions, specifications and/or information. Users of TE Connectivity products must make their own assessment as to whether the respective product is suitable for the respective desired application.

ED 01/25

schaffner MORE POWER TO YOU is now part of TE connectivity