# FCAC-150 Series, 50 Amps, 1PST/NO (DM) with 1PDT Auxiliary Contacts

## Product Facts

- **Non-latching relay**
- **Balanced force design**
- **Corrosion protected metal enclosure**
- **All welded hermetically sealed enclosure occupies about 1 in³ (16.4 cm³)**
- **1 Form C (SPDT) auxiliary contact**
- **6, 12 and 28 Vdc coils**
- **Weight: 90 grams**
- **Designed and built in accordance to MIL-PRF-6106**

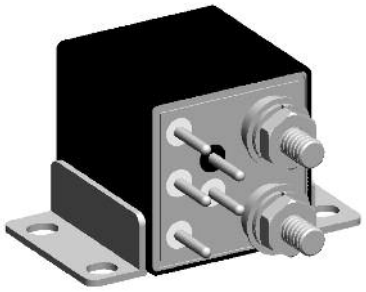

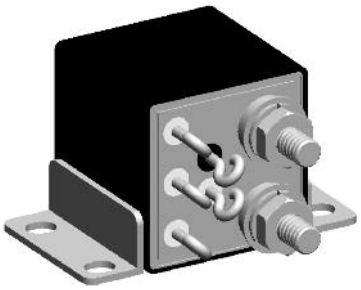

The FCAC-150 series relay is a polarized, single-side stable design, where the flux from a permanent magnet provides the armature holding force in the deactivated state, and its flux path is switched and combined with the coil flux in the operated state. This results in appreciably increased contact pressure in both states over that of a spring return non-polar design.

A 1 form C (SPDT) auxiliary contact set rated 2 amps is available.

## Specifications

**Auxiliary Contact Data**

| | | | | |
|---|---|---|---|---|
| Contact Form | 1 Form X (SPDT-NO-DM) with 1 Form C (SPDT) Auxiliary | | | |
| Contact Rating in Amps (Continuous Duty) | | | | |
| | Type of Load | Life (Min.) Cycles | 28 Vdc | 115 Vac 400Hz |
| | Resistive | 50,000 | 50 | 50 |
| | Inductive (L/R=5ms) | 20,000 | 20 | 20 |
| | Motor | 20,000 | 20 | 20 |
| | None | 100,000 | – | – |

**Coil Data**

| Coil Code | 1 | 2 | 3 | 4(A) |
|---|---|---|---|---|
| Nominal Operating Voltage (Vdc) | 6 | 12 | 28 | 28 |
| Maximum Operating Voltage (Vdc) | 7.3 | 14.5 | 29 | 29 |
| Maximum Pick-Up Voltage at +125°C | 4.5 | 9 | 18 | 18 |
| Maximum Pick-Up Voltage at +125°C, continuous current test (Vdc) | 5.7 | 11.25 | 22.5 | 22.5 |
| Drop-Out Voltage at OTR | 0.3 – 2.5 | 0.75 – 4.5 | 1.5 – 7.0 | 1.5 – 7.0 |
| Maximum Coil Current at +25°C (mA) | .50 | .26 | .15 | .15 |
| Back EMF Suppressed to (Vdc) (max) | N/A | N/A | N/A | -42 |
| Coil Resistance ±10% | 18Ω | 70Ω | 290Ω | 290Ω |



Catalog 5-1773450-5
Revised 3-13

www.te.com

Dimensions are shown for reference purposes only. Specifications subject to change.

Dimensions are in millimeters unless otherwise specified.

USA: +1 800 522 6752
Asia Pacific: +86 0 400 820 6015
UK: +44 800 267 666

For additional support numbers please visit www.te.com

## FCAC-150 Series, 50 Amps, 1PST/NO (DM) with 1PDT Auxiliary Contacts (Continued)

### Specifications

| | |
|---|---|
| **Electrical Data** | |
| Initial Insulation Resistance (note 1) | 100 megohms, minimum, at 500Vdc, between each pin and case |
| Insulation Resistance After Life or Environmental Test (note 1) | 50 megohms, minimum, at 500Vdc, between each pin and case |
| Dielectric Strength At Sea Level | |
| Contacts to Ground and Between Contacts | 1,250Vrms, 60 Hz. |
| Coil to Ground | 1,000Vrms, 60 Hz. |
| Dielectric Strength at 80,000 ft (25,000m), All Points (note 4) | 500Vrms, 60 Hz |
| **Environmental Data** | |
| Ambient Temperature Range, Operating | -70°C to +125°C |
| Altitude | 300,000 feet |
| Shock Resistance | 50 G's, 11 ms. |
| Vibration Resistance, Sinusoidal | 20 G's, 75-3000Hz. |
| **Mechanical Data** | |
| Approximate Weight | 3.2 oz. (90g) Max. |

**NOTES**

1. All wired terminals must be connected together during this test. Dielectric withstanding voltage and insulation resistance are measured between all mutually insulated wired terminals and between all these terminals and case.

### Terminals

**CODE "B"**

**Solder Pin Terminals**
Tin/Lead Plated

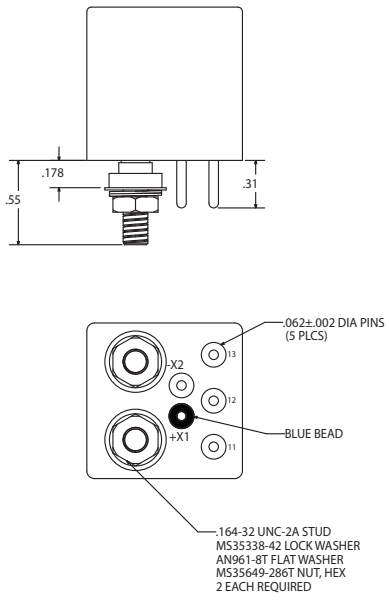


**CODE "C"**

**Solder Hook Terminals**
Tin/Lead Plated

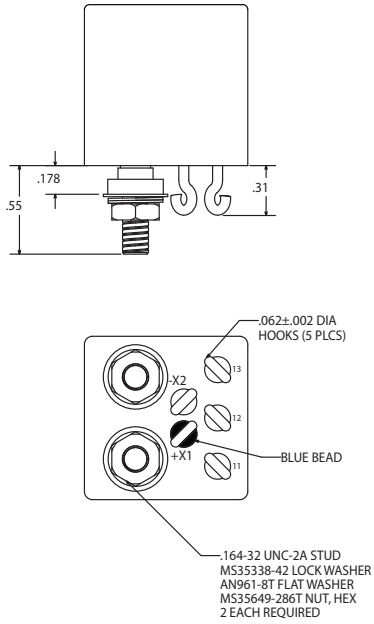


**CODE "K"**

**Terminal Shield**

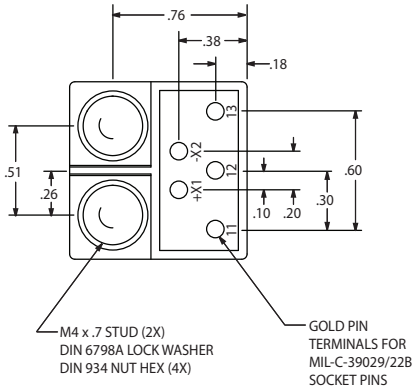






Catalog 5-1773450-5
Revised 3-13

www.te.com

Dimensions are shown for reference purposes only. Specifications subject to change.

Dimensions are in millimeters unless otherwise specified.

USA: +1 800 522 6752
Asia Pacific: +86 0 400 820 6015
UK: +44 800 267 666

For additional support numbers please visit www.te.com

## FCAC-150 Series, 50 Amps, 1PST/NO (DM) with 1PDT Auxiliary Contacts (Continued)

### Outline Dimensions

The standard terminal types and enclosures are illustrated below with dimensions in inches ± 0.010 and (millimeters ±0.25).

#### Enclosures

**CODE "U"**

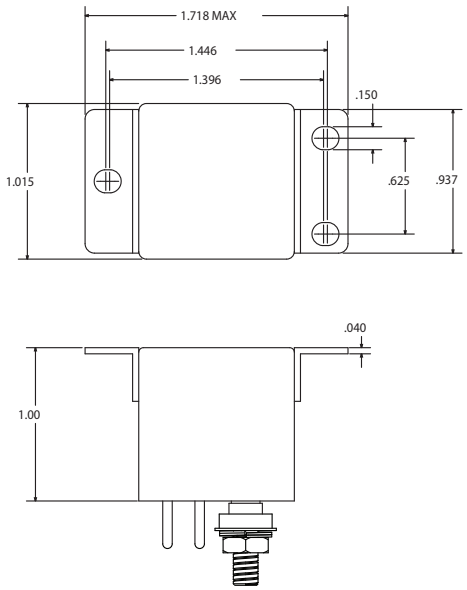


**CODE "Y"**

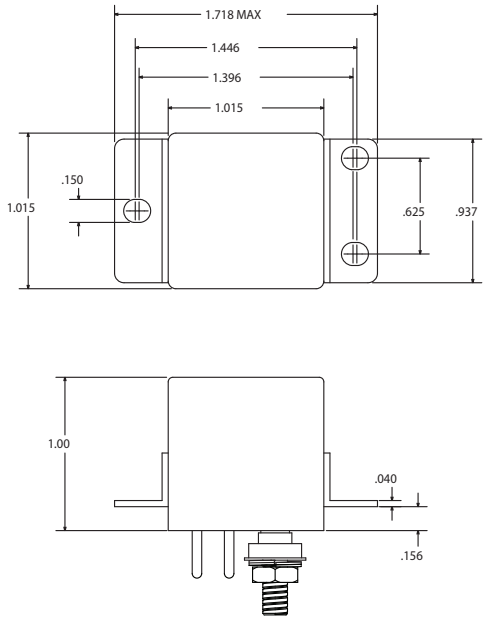


**CODE "X"**

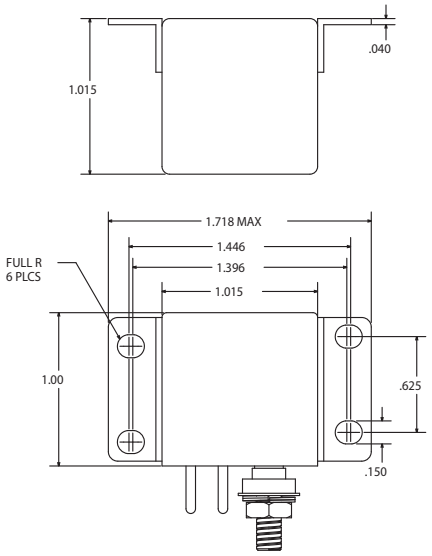


**CODE "R"**

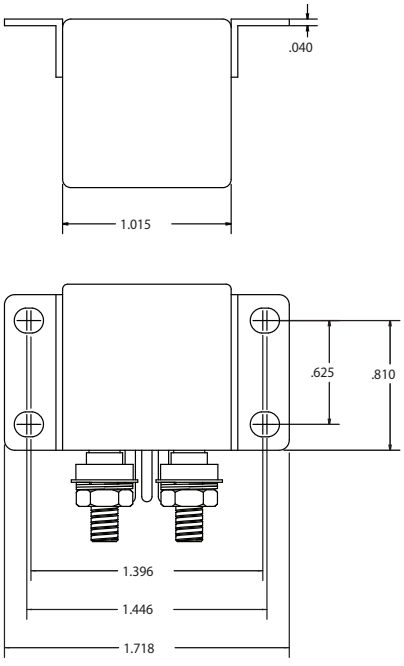




Catalog 5-1773450-5
Revised 3-13

www.te.com

Dimensions are shown for reference purposes only. Specifications subject to change.

Dimensions are in millimeters unless otherwise specified.

USA: +1 800 522 6752
Asia Pacific: +86 0 400 820 6015
UK: +44 800 267 666

For additional support numbers please visit www.te.com

## FCAC-150 Series, 50 Amps, 1PST/NO (DM) with 1PDT Auxiliary Contacts (Continued)

### Terminal Wiring

**DC Coils**

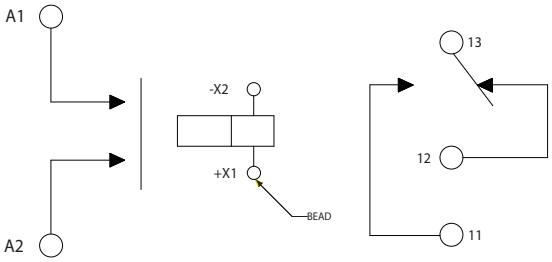


**DC Coils with Transient Suppression**

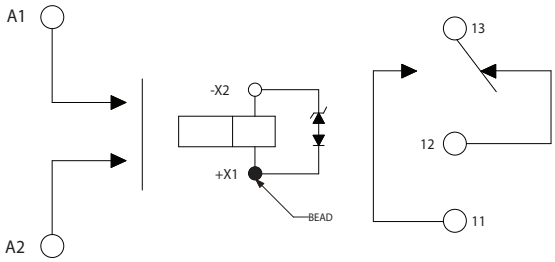


**NOTE:** Polarity must be observed with DC coil supply. Relay is polarized with a permanent magnet and will not operate or be damaged by reverse polarity.

Diodes used in transient suppression and in AC rectifier circuits have peak inverse voltage rating of 600 VDC minimum. Zener diodes have a minimum rating of 1 watt.

Terminal designations are for reference only and do not appear on the header.

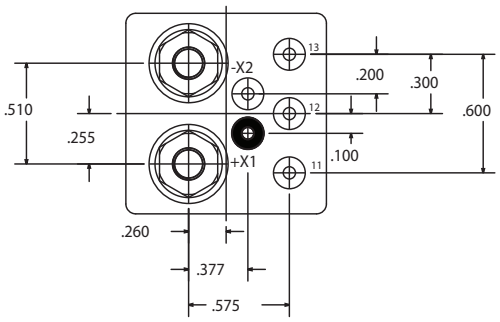


**TERMINAL VIEW**



### How to Order

| Typical Part Number | FCAC-150 | B | Y | 3 |
|---|---|---|---|---|

Series and Contact Arrangement:
FCAC-150 = Relay with 1 Form X Main Contacts, 1 Form C Aux. Contacts

Terminals (see drawings for details):
B = Solder Pin Coil Terminals, Stud Power Terminals
C = Solder Hook Coil Terminals, Stud Power Terminals
K = Terminal Block, Stud Power Terminals

Enclosure (see drawings for details):
R = Horizontal Flange Mount, Rotated
Y = Raised Vertical Flange Mount
U = Flush Vertical Flange Mount
Z = No Mount
X = Horizontal Flange Mount

Coil:
1 = 6Vdc nominal
2 = 12Vdc nominal
3 = 28Vdc nominal
4 = 28Vdc nominal, with back EMF suppression



Catalog 5-1773450-5
Revised 3-13

www.te.com

Dimensions are shown for reference purposes only. Specifications subject to change.

Dimensions are in millimeters unless otherwise specified.

USA: +1 800 522 6752
Asia Pacific: +86 0 400 820 6015
UK: +44 800 267 666

For additional support numbers please visit www.te.com