FCA-210-1027M ✔ ACTIVE

CII | CII FCA-125 Series

TE Internal #: 2-1617749-5

General Purpose Power Relay, DC, Polarized, Monostable, 2 Form C DPDT-CO, 10 A Contact Rating, 28 VDC Coil Voltage, CII FCA-125 Series

View on TE.com >

Relays & Contactors > Electromechanical Relays

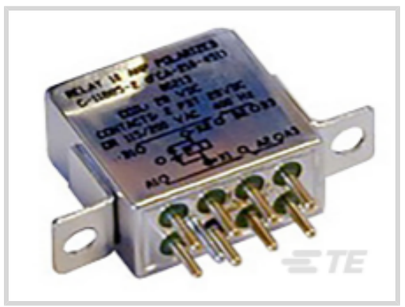

Relay & Contactor Type: **General Purpose Power Relay**

Coil Magnetic System: **Polarized, Monostable**

Contact Arrangement: **2 Form C DPDT-CO**

Current Type: **DC**

Contact Current Rating: **10 A**

Features

Product Type Features

Relay & Contactor Type	General Purpose Power Relay

Configuration Features

Coil Special Features	Coil Suppression Diode
Relay Options	Back EMF Suppression
Contact Arrangement	2 Form C DPDT-CO

Electrical Characteristics

Coil Resistance	320 Ω
Contact Current Rating	10 A
Coil Voltage Rating	28 VDC

Body Features

Enclosure Type	Hermetically Sealed

Contact Features

Contact Material	Silver Cadmium Oxide
Terminal Plating	Tin-Lead

Termination Features

Main Termination & Connection Type	Solder Pins
Coil Termination & Connection Type	Solder Pins

Mechanical Attachment

Product Mounting Feature Type	Mounting Brackets
Product Mount Type	Panel & Printed Circuit Board

Usage Conditions

Operating Temperature Range	-70 – 125 °C[-94 – 257 °F]
Environmental Ambient Temperature (Max)	125 °C[257 °F]

Operation/Application

Vibration Resistance	30G's, 10 – 3000Hz
Shock Resistance	200G's, 6ms
Coil Magnetic System	Polarized, Monostable
Current Type	DC

Other

Contact Current Class	>5 – ≤10 A

Product Compliance

For compliance documentation, visit the product page on TE.com>

EU RoHS Directive 2011/65/EU	Not Compliant
EU ELV Directive 2000/53/EC	Not Compliant
China RoHS 2 Directive MIIT Order No 32, 2016	有害物质含量超出标准 Restricted Substance(s) Above Threshold
EU REACH Regulation (EC) No. 1907/2006	Current ECHA Candidate List: JUNE 2025 (250) Candidate List Declared Against: JUNE 2025 (250) SVHC > Threshold: Cadmium oxide (15% in M-45593-1) **Article Safe Usage Statements:** Use personal protective equipment as required. Do not eat, drink or smoke when using this product. Recycle if possible and dispose of the article by following all applicable governmental regulations relevant to your geographic location.
Halogen Content	Low Halogen - Br, Cl, F < 900 ppm per homogenous material. Also BFR/CFR/PVC Free
Solder Process Capability	Not lead free process capable

Product Compliance Disclaimer

This information is provided based on reasonable inquiry of our suppliers and represents our current actual knowledge based on the information they provided. This information is subject to change. The part numbers that TE has identified as EU RoHS compliant have a maximum concentration of 0.1% by weight in homogenous materials for lead, hexavalent chromium, mercury, PBB, PBDE, DBP, BBP, DEHP, DIBP, and 0.01% for cadmium, or qualify for an exemption to these limits as defined in the Annexes of Directive 2011/65/EU (RoHS2). Finished electrical and electronic equipment products

will be CE marked as required by Directive 2011/65/EU. Components may not be CE marked. Additionally, the part numbers that TE has identified as EU ELV compliant have a maximum concentration of 0.1% by weight in homogenous materials for lead, hexavalent chromium, and mercury, and 0.01% for cadmium, or qualify for an exemption to these limits as defined in the Annexes of Directive 2000/53/EC (ELV). Regarding the REACH Regulation, the information TE provides on SVHC in articles for this part number is based on the latest European Chemicals Agency (ECHA) 'Guidance on requirements for substances in articles' posted at this URL: https://echa.europa.eu/guidance-documents/guidance-on-reach

Compatible Parts



TE Part # 5-1617825-5
TD229C-2001SY=TDFO 2 SEC



TE Part # 2-1617826-5
TD229-2003P=TDFR 2 SEC M83726/29-2003P



TE Part # 3-1617805-2
TD229-9002S=TDFR 90 SEC M83726/29-9002S



TE Part # 3-1617805-1
TD229-3002S=TDFR 30 SEC M83726/29-3002S



TE Part # 1-1617806-3
TD228-6002P=TDFO 60 SEC M83726/28-6002P



TE Part # 1-1617820-3
TD228-4000S=TDFO .40 SEC M83726/28-4000S



TE Part # 2-1617813-8
TD231-5003P=TDAR50-500SECM83726/31-5003P



TE Part # 8-1617814-9
TD231C-1002TY=TDAR 1-10 SEC



TE Part # 2-1617805-7
TD228-8001P=TDFO 8 SEC M83726/28-8001P



TE Part # 1-1617805-6
TD228-1001P=TDFO 1SEC M83726/28-1001P



TE Part # 1617820-5
TD229C-4000TZ=TDFR .4 SEC SOLDPINNOMT



TE Part # 1617814-1
TD229-9001S=TDFR 9 S M83726/29-9001S



TE Part # 1-1617805-8
TD228-1002P=TDFO 1O SEC M83726/28-1002P



TE Part # 4-1617819-1
TD228-4502S=TDFO 45 SEC M83726/28-4502S



TE Part # 4-1617801-0
FCA-415-CX3=4PDT MID-RANGE RELAY



TE Part # 9-1617812-6
TD230-5002P=TDAO 50 SEC M83726/30-5002P



TE Part # 9-1617805-2
TD230-6002S=TDAO 6-60SEC M83726/30-6002S



TE Part # 7-1617816-5
TD230-1002S=TDAO 10 S M83726/30-1002S



TE Part # 8-1617808-0
TD229-9002P= TDFR 90 SEC M83726/29-9002P



TE Part # 8-1617815-6
TD231-5003S=TDAR 500 SEC M83726/31-5003S

Also in the Series | CII FCA-125 Series

General Purpose Power Relays(78)



PCB Relays(22)



Plug-In Relays(25)

Customers Also Bought

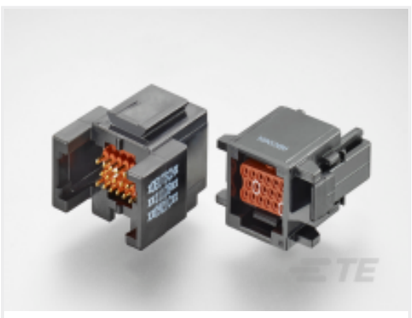

TE Part #ABC06N-20P-4048
IN-LINE PLUG

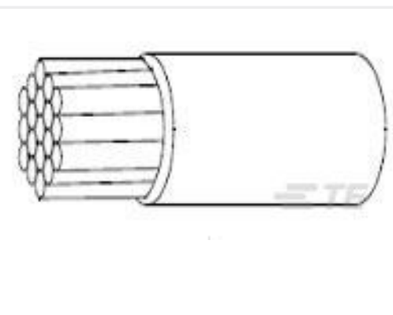

TE Part #223339-000
22759/33-30-6



TE Part #9-146253-0
80 MODII HDR DRST B/A .100CL L



TE Part #530341-7
BOX PIN HEADER KIT



TE Part #1-1437559-1
MTG106D=(MSTG) SW TOG MUSTANG



TE Part #1469265-1
UPM R/A KEYED GUIDE PIN



TE Part #8-1625963-6
HSA5 330R 5%



TE Part #1658622-7
30 NOVO MIL/CTR 30DP,LEAD FREE

TE Part #PC4B1304PN-1-B
PC4B1304PN-1-B

TE Part #PC4B0935SN-1-B
PC4B0935SN-1-B

Documents

Product Drawings

FCA-210-1027M=M83536/10-027M

English

CAD Files

3D PDF

3D

Customer View Model

ENG_CVM_CVM_2-1617749-5_B.2d_dxf.zip

English

Customer View Model

ENG_CVM_CVM_2-1617749-5_B.3d_igs.zip

English

Customer View Model

ENG_CVM_CVM_2-1617749-5_B.3d_stp.zip

English

By downloading the CAD file I accept and agree to the Terms and Conditions of use.

Datasheets & Catalog Pages

5-1773450-5_sec5_FCA-210

English