FCA-125-3601L ✔ ACTIVE

CII

TE Internal #: 4-1617791-2

General Purpose Power Relay, DC, Polarized, Monostable, 1 Form C SPDT-CO, 25 A Contact Rating, 28 VDC Coil Voltage, Chassis Mount, Hermetically Sealed

View on TE.com >

Relays & Contactors > Electromechanical Relays



Relay & Contactor Type: **General Purpose Power Relay**

Coil Magnetic System: **Polarized, Monostable**

Contact Arrangement: **1 Form C SPDT-CO**

Current Type: **DC**

Contact Current Rating: **25 A**

Features

Product Type Features

Relay & Contactor Type	General Purpose Power Relay

Configuration Features

Contact Arrangement	1 Form C SPDT-CO

Electrical Characteristics

Coil Resistance	320 Ω
Contact Switching Voltage (Max)	115 VAC
Contact Current Rating	25 A
Coil Voltage Rating	28 VDC

Body Features

Enclosure Type	Hermetically Sealed

Contact Features

Contact Material	Silver Cadmium Oxide
Terminal Plating	Tin-Lead

Termination Features

Main Termination & Connection Type	Solder Hook Terminals
Coil Termination & Connection Type	Solder Hook Terminals

Mechanical Attachment

Product Mounting Feature Type	Mounting Brackets
Product Mount Type	Chassis Mount

Usage Conditions

Operating Temperature Range	-70 – 125 °C[-94 – 257 °F]
Environmental Ambient Temperature (Max)	125 °C[257 °F]

Operation/Application

Vibration Resistance	30G's, 10 – 3000Hz
Shock Resistance	200G's, 6ms
Coil Magnetic System	Polarized, Monostable
Current Type	DC

Other

Contact Current Class	>16 – ≤25 A

Product Compliance

For compliance documentation, visit the product page on TE.com>

EU RoHS Directive 2011/65/EU	Not Compliant
EU ELV Directive 2000/53/EC	Not Compliant
China RoHS 2 Directive MIIT Order No 32, 2016	有害物质含量超出标准 Restricted Substance(s) Above Threshold
EU REACH Regulation (EC) No. 1907/2006	Current ECHA Candidate List: JUNE 2025 (250) Candidate List Declared Against: JAN 2025 (247) SVHC > Threshold: Cd (10% in Component Part) Cadmium oxide (7.84% in M-15215-1) Pb (.13% in M-15215-2) **Article Safe Usage Statements:** Use personal protective equipment as required. Do not eat, drink or smoke when using this product. Wash thoroughly after handling. Recycle if possible and dispose of the article by following all applicable governmental regulations relevant to your geographic location.
Halogen Content	Low Halogen - Br, Cl, F < 900 ppm per homogenous material. Also BFR/CFR/PVC Free
Solder Process Capability	Not lead free process capable

Product Compliance Disclaimer

This information is provided based on reasonable inquiry of our suppliers and represents our current actual knowledge based on the information they provided. This information is subject to change. The part numbers that TE has identified as EU RoHS compliant have a maximum concentration of 0.1% by weight in homogenous materials for lead, hexavalent

chromium, mercury, PBB, PBDE, DBP, BBP, DEHP, DIBP, and 0.01% for cadmium, or qualify for an exemption to these limits as defined in the Annexes of Directive 2011/65/EU (RoHS2). Finished electrical and electronic equipment products will be CE marked as required by Directive 2011/65/EU. Components may not be CE marked.Additionally, the part numbers that TE has identified as EU ELV compliant have a maximum concentration of 0.1% by weight in homogenous materials for lead, hexavalent chromium, and mercury, and 0.01% for cadmium, or qualify for an exemption to these limits as defined in the Annexes of Directive 2000/53/EC (ELV). Regarding the REACH Regulations, TE's information on SVHC in articles for this part number is still based on the European Chemical Agency (ECHA) 'Guidance on requirements for substances in articles'(Version: 2, April 2011), applying the 0.1% weight on weight concentration threshold at the finished product level. TE is aware of the European Court of Justice ruling of September 10th, 2015 also known as O5A (Once An Article Always An Article) stating that, in case of 'complex object', the threshold for a SVHC must be applied to both the product as a whole and simultaneously to each of the articles forming part of its composition. TE has evaluated this ruling based on the new ECHA "Guidance on requirements for substances in articles" (June 2017, version 4.0) and will be updating its statements accordingly.

Compatible Parts

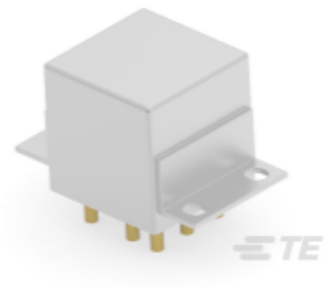

TE Part # 3-1617753-9
FCA-325-AY4

Customers Also Bought



TE Part #CAT-D48-ST273
DEUTSCH Connector Solid Contacts



TE Part #CAT-D487-W416
Wedgelocks: DEUTSCH DT



TE Part #DT06-2S
PLG, 2P, GRY, N



TE Part #DT04-2P
REC, 2P, GRY, N



TE Part #114017-ZZ
SEALING PLUG, SIZE 12/16, WHT

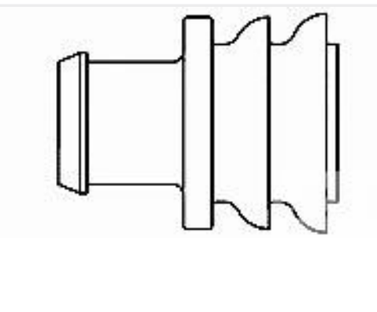

TE Part #281934-2
SINGLE WIRE SEAL



TE Part #CAT-AM71-CH8172
AMP SUPERSEAL 1.5MM, CONNECTOR HOUSING

Documents

Product Drawings

FCA-125-3601L=M83536/36-001L

English

Datasheets & Catalog Pages

5-1773450-5_sec5_FCA-125

English