EM5015 Series
EuroMag Terminal Blocks
Pluggable Block
(Mates with EM5025 Series); 5.00 Centers

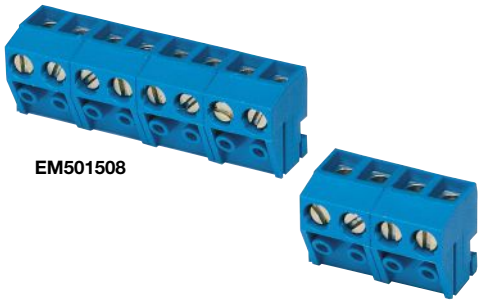

SPECIFICATIONS
Rating: 15A, 300V
Center Spacing: 0.197" (5.00mm)
Wire Range: #16-24 AWG
Housing Material: Blue UL 94V0 Thermoplastic
Contact Material: Tin-Plated Brass
Screw Size: M2x6 Chromatized Steel
Operating Temperature: 120°C (221°F) max., -40°C (-40°F) min.
Torque Rating: 3.0 lb-in.
Construction: Modular design features dovetails for interlocking to achieve longer lengths
Connector Style: Spring and Screw
Agency Information: File E62622; CE Certified

Poles	L (mm)	Poles	L (mm)
2*	10.0	14	70.0
3*	15.0	15	75.0
4	20.0	16	80.0
5	25.0	17	85.0
6	30.0	18	90.0
7	35.0	19	95.0
8	40.0	20	100.0
9	45.0	21	105.0
10	50.0	22	110.0
11	55.0	23	115.0
12	60.0	24	120.0
13	65.0		

To convert to inches, divide by 25.4
*Mold-to-Length

Dimensions - in (mm)

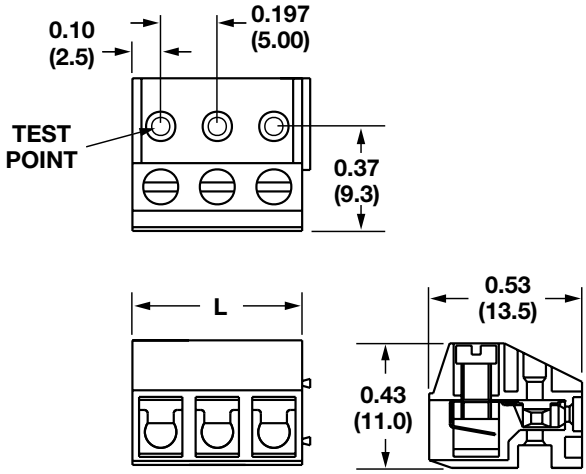

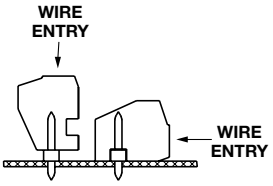

Mating orientations

Part Numbering System

Series

E M 5 0 1 5

# of Poles

□□

02 to **24**

Mating Header: EM5025 pg. 104