ECE05 Series

XP Power

5W CONVECTION COOLED

AC-DC POWER SUPPLIES

The ECE05 is a series of open frame and encapsulated AC-DC single output power supplies designed for low power ITE and industrial applications. The series provides two mechanical options including open frame and encapsulated PCB mount. With approvals to world-wide safety standards, compliance with class B for conducted and radiated emissions and a 20%, 30s peak load capability, these class II isolation parts benefit system designers with easy integration into a wide range of applications.

Features

- Ultra Compact Size
- Single Outputs from 3.3 to 48V
- Encapsulated PCB Mount
- <0.3W No Load Input Power
- Peak Load Capability
- No External Components Required
- 3 Year Warranty

Applications

Instrumentation | IoT | Security | Technology

Dimensions

ECE05:
1.00” x 1.00” x 0.60” (25.4 x 25.4 x 15.24mm)

ECE05-P:
0.94” x 0.94” x 0.61” (23.9 x 23.9 x 15.5mm)

Models & Ratings

Model Number[2]	Output Voltage	Output Current		Efficiency[3]	Output Power
		Nominal	Peak[1]		
ECE05US03	3.3VDC	1.51A	1.81A	74%	5W
ECE05US05	5.0VDC	1.00A	1.20A	80%	5W
ECE05US09	9.0VDC	0.55A	0.66A	82%	5W
ECE05US12	12.0VDC	0.41A	0.49A	82%	5W
ECE05US15	15.0VDC	0.33A	0.40A	84%	5W
ECE05US24	24.0VDC	0.21A	0.25A	83%	5W
ECE05US48	48.0VDC	0.10A	0.12A	85%	5W

Notes:

1. Peak load lasting <30s with a maximum duty cycle of 10%, average output power not to exceed nominal power.
2. Add suffix-P to model number to denote open frame version. Available for OEM quantities.
3. Efficiencies measured at 100% load with 115VAC input.

Summary

Characteristic	Minimum	Typical	Maximum	Units	Notes & Conditions
Input Voltage Range	85		264	VAC	Derate from 100% at 90VAC to 90% at 85VAC
No Load Input Power			0.3	W	
Efficiency		83		%	Model dependent
Operating Temperature	-25		+70	°C	Derate linearly from 100% at +50°C to 50% at +70°C
EMC	EN55032 Level B Conducted & Radiated, EN601000-3-2, EN61000-3-3, EN60601-1-2				
Safety Approvals	IEC62368-1, IEC60950-1, EN62368-1, UL62368-1				

Input

Characteristic	Minimum	Typical	Maximum	Units	Notes & Conditions
Input Voltage Range	85		264	VAC	Derate load from 100% at 90VAC to 90% at 85VAC
Input Frequency	47		63	Hz	
Input Current			0.1	A rms	At 230VAC
No Load Input Power			0.3	W	
Inrush Current			5/10	A	5A at 115VAC, 10A at 230VAC
Earth Leakage Current					Class II construction no earth
Input Protection	Internal T1 A/250VAC fuse				
Power Factor	EN61000-3-2 Class A				

Output

Characteristic	Minimum	Typical	Maximum	Units	Notes & Conditions
Output Voltage	3.3		48	VDC	
Initial Set Accuracy			±1	%	
Minimum Load	0			A	No minimum load required
Line Regulation			±0.5	%	
Load Regulation			±1		
Start Up Delay			2	s	
Start Up Rise Time			25	ms	
Hold Up Time		8		ms	At full load and 115VAC
		40			At full load and 230VAC
Transient Response			4	%	Deviation, recovery within 1% in less than 500µs for a 25% load change
Ripple & Noise			60	mV pk-pk	3.3 & 5V models, 20MHz bandwidth
			1	% pk-pk	All other models, 20MHz bandwidth
Overvoltage Protection	125		190	%	
Overload Protection	125		190	%	
Short Circuit Protection					Trip & Restart (hiccup mode)
Temperature Coefficient			0.05	%/°C	

General

Characteristic	Minimum	Typical	Maximum	Units	Notes & Conditions
Efficiency		83		%	
Isolation: Input to Output	4000			VAC	
Switching Frequency		130		kHz	
Power Density			8.3	W/in^3	
Mean Time Between Failure	450			khrs	MIL-HDBK-217F, +25°C GB
Weight		0.035 (16)		lb (g)	ECE05
		0.022 (10)			ECE05-P

Environmental

Characteristic	Minimum	Typical	Maximum	Units	Notes & Conditions
Operating Temperature	-25		+70	°C	Derate linearly from 100% at +50°C to 50% at +70°C
Storage Temperature	-40		+85	°C	
Cooling	Convection-cooled				
Humidity			95	%RH	Non-condensing
Operating Altitude			3048 (10 000)	m (ft)	
Vibration	2g, 10Hz to 500Hz, 10 mins/cycle, 60 mins each of 3 axes.				

Safety Approvals

Certification	Standard	Notes & Conditions
CB	IEC60950-1	ITE
	IEC62368-1	
UL	UL62368-1	ITE
TUV	EN62368-1	
CE	Meets all applicable directives	
UKCA	Meets all applicable legislation	

EMC: Emissions

Phenomenon	Standard	Test Level	Notes & Conditions
Conducted	EN55032	Class B	If output is connected to ground, please contact applications engineering for further information
Radiated	EN55032	Class B	
Harmonic Current	EN61000-3-2, EN61000-3-3	Class A	

EMC: Immunity

Phenomenon	Standard	Test Level	Criteria	Notes & Conditions
ESD Immunity	EN61000-4-2	3	A	
Radiated Immunity	EN61000-4-3	10 V/m, 80%	A	
EFT/Burst	EN61000-4-4	3	A	
Surge	EN61000-4-5	3	A	Line to line
Conducted	EN61000-4-6	10Vrms	A	
Magnetic Fields	EN61000-4-8	10A/m	A	
Dips and Interruptions	EN61000-4-11	30% for 10ms	A	
		60% for 100ms	B	
		100% for 5000ms	B	

Mechanical Details

ECE05

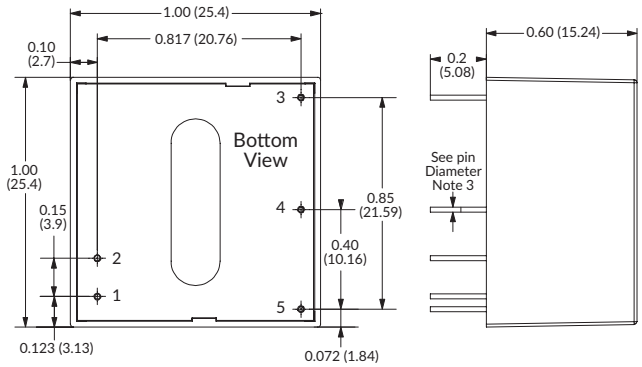

Pin	Function
1	ACN
2	ACL
3	NC
4	+Vout
5	-Vout

ECE05-P

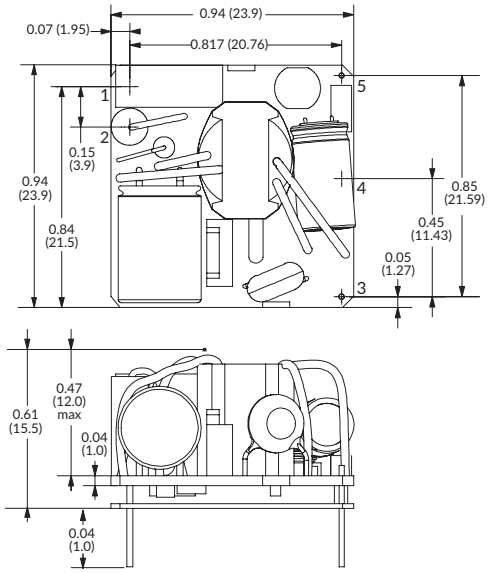

Notes:

1. All dimensions in inches (mm).
2. Weight: ECE05: 0.035lbs (16g), ECE05-P: 0.022lbs (10g)
3. Pin 1, 2 Size is 0.024" (0.6mm) DIA 0.002" (0.05mm) Pin 3, 4, 5 Size is 0.02" (0.5mm) DIA 0.002" (0.05mm)
4. Tolerances: x.xx = ± 0.02 (x.x = ± 0.5), x.xxx = ± 0.01 (x.xx = ± 0.25)
5. The solder pads for pins 1 & 2 should have a maximum diameter of 1.3mm to ensure that the creepage requirements of IEC62363 are met.