| SERIESONE DR DUAL SERIES

DIN RAIL MOUNT SOLID STATE RELAYS

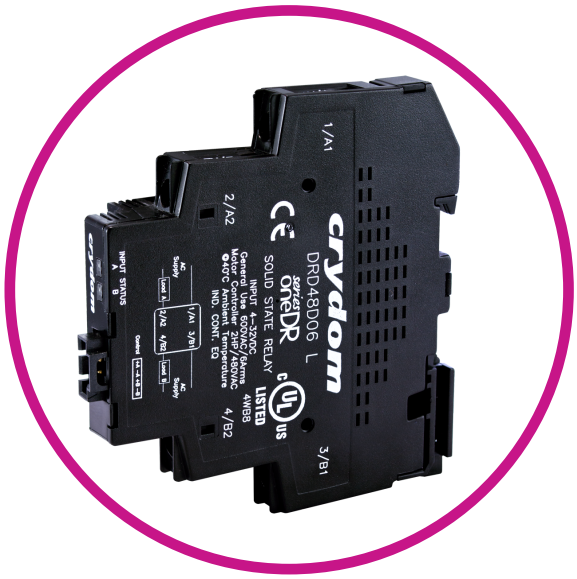

Features

- Dual Output with Ratings of 6 Amps each channel
- Load voltage ratings of 24-280 VAC and 48-600 VAC
- Fits standard 35mm DIN Rail
- LED input status indicator
- DC control (4-32V)
- Zero Voltage (resistive loads) or Instantaneous (inductive loads) turn-on output
- UL and cUL Listed, HP Rated (General Purpose and Motor Control)
- CE & RoHs Compliant
- UL 508 Endurance Rating for Enhanced Reliability
- UL Class I and II, Division 2, for Hazardous Locations

PRODUCT SELECTION

Control Voltage	280V, 6 A	600V, 6A
4-32 VDC	DRD24D06	DRD48D06

SPECIFICATIONS

AC Output [1]

Description	DRD24D06	DRD48D06
Operating Voltage Range (47-63Hz) [Vrms]	24-280	48-600
Transient Overvoltage [Vpk]	600	1200
Maximum Load Current, resistive [Arms] [2]	6	6
Minimum Load Current [mArms]	150	150
Maximum Off-State Leakage Current @ Rated Voltage [mArms]	0.1	0.25
Minimum Off-State dv/dt @ Maximum Rated Voltage [V/µsec] [3]	500	500
Maximum On-State Voltage Drop @ Rated Current [Vrms]	1.3	1.3
Maximum Surge Current (50/60Hz, 1 cycle) [Apk]	715/750	715/750
Maximum I^2t for Fusing (50/60 Hz, 1/2 cycle) [A^2 sec]	2560/2330	2560/2330

Copyright © 2025 Sensata Technologies, Inc.

HP Rating UL 508/IEC60947 [HP (KW)] @ 240V	1/2 (.37)	1/2 (.37)
HP Rating UL 508/IEC60947 [HP (KW)] @ 380V	N/A	1 (.75)
HP Rating UL 508/IEC60947 [HP (KW)] @ 480V	N/A	2 (1.5)
Minimum Power Factor (at Maximum Load)	0.5	0.5
Min/Max stranded wire	22/14 AWG	22/14 AWG
Min/Max solid wire	22/14 AWG	22/14 AWG

Input [1]

Description	DRDxxD06
Control Voltage [Vdc] [4]	4.0-32
Minimum Turn-On Voltage [Vdc]	1.0
Must Turn-Off Voltage [Vdc]	4.0
Minimum Input Current for [mA] [5]	9
Maximum Input Current for [mA] [5]	11
Maximum Turn-on Time [msec] [6]	1/2 Cycle
Maximum Turn-off Time [msec]	1/2 Cycle
Min/Max stranded/solid wire	22/16 AWG

General [1]

Dielectric Strength, Input/Output/Base (50/60Hz)	2500 Vrms
Minimum Insulation Resistance (@ 500 V DC)	10^9 Ohms
Maximum Capacitance, Input/Output	10 pF
Ambient Operating Temperature Range	-30 to 80 °C
Ambient Storage Temperature Range	-30 to 100 °C
Recommended Terminal Screw Torque Range	4.4-7.0 lb-in (0.5-0.8Nm)
Weight (Typical)	3.17 oz (90g)

Copyright © 2025 Sensata Technologies, Inc.

MECHANICAL SPECIFICATIONS [1]

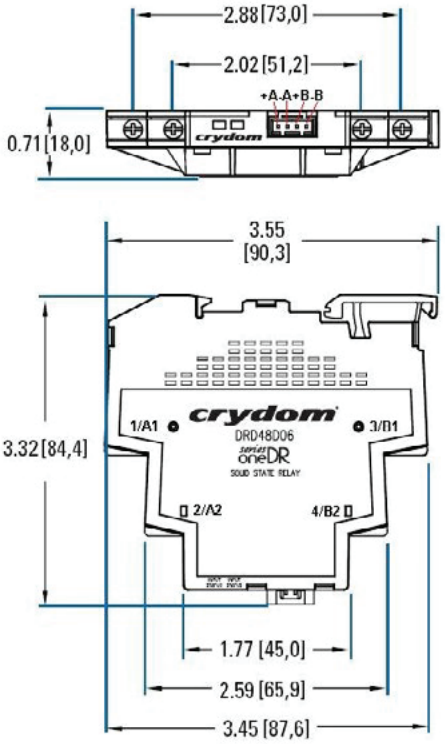

Tolerances: + 0.02in / 0.5mm
Dimensions are in inches [millimeters]
Mating connector is Molex 050579404 or equivalent

EQUIVALENT CIRCUIT BLOCK DIAGRAMS/WIRING DIAGRAMS

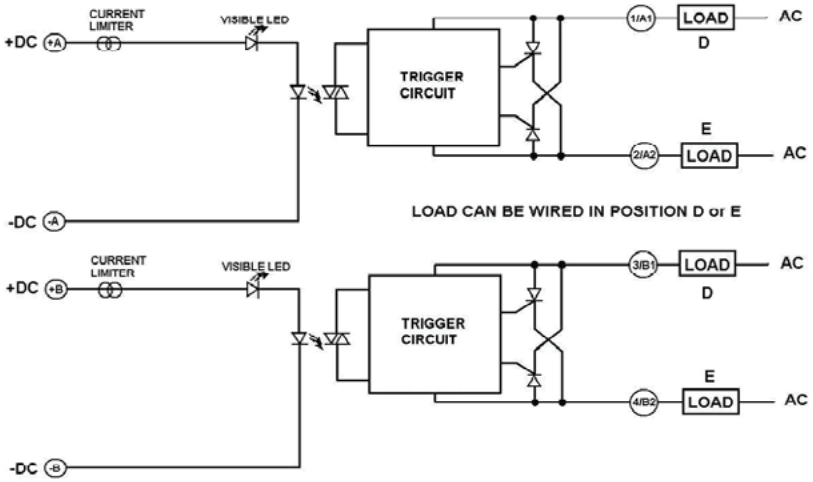

Copyright © 2025 Sensata Technologies, Inc.

THERMAL DERATE INFORMATION

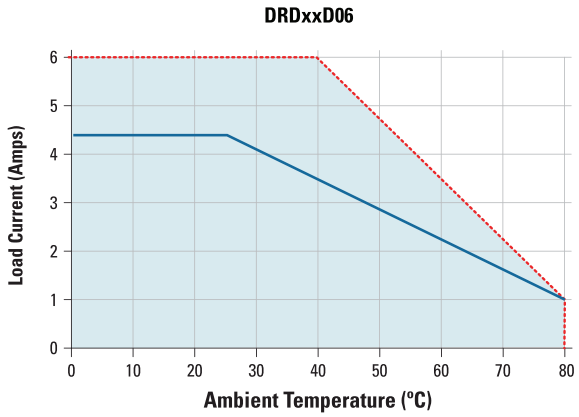

---- Single or Multi unit ***

— Multi Units No Spacing

*** Minimum Spacing between Units is 18mm

STANDARDS OF COMPLIANCE

IEC 62314
LC A, Resistive or Slightly Inductive Load Ratings: 6A per channel @ 40°C ambient for DRD24D06X, 6A per channel @ 40°C ambient for DRD48D06X
LC B, Motor Loads Ratings: 0.375KW @ 240VAC for DRD24x06X and 1.5KW @ 480VAC DRD48x06X

Shock and Vibration (Applies to all part numbers)
Vibration Resistence according to IEC 60068-2-6: **0.35mm and 0.75mm Amplitude over 10-55 Hz**
Shock Resistance according to IEC 60068-2-27: **15g/11ms**

EMC (Applies to all part numbers)
IEC 61000-4-2: Electrostatic Discharge- Level 3
IEC 61000-4-4: Electrically Fast Transients- Level 3
IEC 61000-4-5: Electrical Surges- Level 3

ANSI / ISA 12.12.01-2013
Nonincendive Electrical Equipment for Use in Class I and II, Division 2 and Class III, Division 1 and 2 Hazadous (classified) locations
This equipment is open-type device and is meant to be installed in an enclosure suitable for the enviroment such that the equipment is only accesible with the use of a tool suitable for use in Class 1, Division 2, Group A,B,C and Hazardous locations, or Nonhazardous locations only

WARNING-Explosion Hazard- Do not disconnect equipment while the circuit is live or unless the area is known to be free of ignitable concentrations
WARNING-Explosion Hazard- Substitution of any component may impair suitability for Class I, Division 2

ORDERING OPTIONS

Example : DRD24D06R

DRD	24	D	06	X	R

Series
DRD

Operating Voltage
24: 24-280 VAC
48: 48-600 VAC

Control Voltage
D: 4-32 VDC

Rated Load Current
06: 6 Amps

Agency Approvals
X: ATEX II 3G Ex nA IIC T4 Gc approved

Switching Type
Blank: Zero Voltage Turn-On
R: Instantaneous Turn-On

— Required for valid part number
☐ For options only and not required for valid part number

Copyright © 2025 Sensata Technologies, Inc.

GENERAL NOTES

(1) All parameters at 25°C unless otherwise specified.
(2) See Derating curves
(3) Off-State dv/dt test method per EIA/NARM standard RS-443, paragraph 13.11.1
(4) DC control includes reverse polarity protection.
(5) Input circuitry incorporates active current limiter.
(6) Turn-on time for DC control random turn-on versions is 0.1 msec.

AGENCY APPROVALS & CERTIFICATIONS

c UL US LISTED IND. CONT. EQ. 4WB8 E116949 CE RoHS

WARNINGS

DANGER

RISK OF MATERIAL DAMAGE AND HOT ENCLOSURE
- The product's side panels may be hot, allow the product to cool before touching
- Follow proper mounting instructions including torque values
- Do not allow liquids or foreign objects to enter this product

Failure to follow these instructions can result in serious injury, or equipment damage.

Danger
Electric shock risk

HAZARD OF ELECTRIC SHOCK, EXPLOSION OR ARC FLASH
- Disconnect all power before installing or working with this equipment
- Verify all connections and replace all covers before turning on power

Failure to follow these instructions will result in death or serious injury.

Datasheets provided by Sensata Technologies, Inc., its subsidiaries and/or affiliates ("Sensata") are solely intended to assist third parties ("Buyers") who are developing systems that incorporate Sensata products (also referred to herein as "components"). Buyer understands and agrees that Buyer remains responsible for using its independent analysis, valuation, and judgment in designing Buyer's systems and products. Sensata datasheets have been created using standard laboratory conditions and engineering practices. Sensata has not conducted any testing other than that specifically described in the published documentation for a particular datasheet. Sensata may make corrections, enhancements, improvements, and other changes to its datasheets or components without notice.
Buyers are authorized to use Sensata datasheets with the Sensata component(s) identified in each particular datasheet. HOWEVER, NO OTHER LICENSE, EXPRESS OR IMPLIED, BY ESTOPPEL OR OTHERWISE TO ANY OTHER SENSATA INTELLECTUAL PROPERTY RIGHT, AND NO LICENSE TO ANY THIRD PARTY TECHNOLOGY OR INTELLECTUAL PROPERTY RIGHT, IS GRANTED HEREIN. SENSATA DATASHEETS ARE PROVIDED "AS IS". SENSATA MAKES NO WARRANTIES OR REPRESENTATIONS WITH REGARD TO THE DATASHEETS OR USE OF THE DATASHEETS, EXPRESS, IMPLIED, OR STATUTORY, INCLUDING ACCURACY OR COMPLETENESS. SENSATA DISCLAIMS ANY WARRANTY OF TITLE AND ANY IMPLIED WARRANTIES OF MERCHANTABILITY, FITNESS FOR A PARTICULAR PURPOSE, QUIET ENJOYMENT, QUIET POSSESSION, AND NON-INFRINGEMENT OF ANY THIRD PARTY INTELLECTUAL PROPERTY RIGHTS WITH REGARD TO SENSATA DATASHEETS OR USE THEREOF.
All products are sold subject to Sensata's terms and conditions of sale supplied at www.sensata.com SENSATA ASSUMES NO LIABILITY FOR APPLICATIONS ASSISTANCE OR THE DESIGN OF BUYERS' PRODUCTS. BUYER ACKNOWLEDGES AND AGREES THAT IT IS SOLELY RESPONSIBLE FOR COMPLIANCE WITH ALL LEGAL, REGULATORY, AND SAFETY-RELATED REQUIREMENTS CONCERNING ITS PRODUCTS, AND ANY USE OF SENSATA COMPONENTS IN ITS APPLICATIONS, NOTWITHSTANDING ANY APPLICATIONS-RELATED INFORMATION OR SUPPORT THAT MAY BE PROVIDED BY SENSATA.
Mailing Address: Sensata Technologies, Inc., 529 Pleasant Street, Attleboro, MA 02703, USA.

CONTACT US

Americas
+1 (800) 350 2727
sales.crydom@sensata.com
Europe, Middle East & Africa
+44 (1202) 416170
ssr-info.eu@sensata.com
Asia Pacific
sales.isasia@list.sensata.com
China +86 (21) 2306 1500
Japan +81 (45) 277 7117
Korea +82 (31) 601 2004
India +91 (80) 67920890
Rest of Asia +886 (2) 27602006 ext 2808

Copyright © 2025 Sensata Technologies, Inc.

Rev:05/28/2025_ECN 20395 FDE-07-01 Rev. B