DMR35-DCA Series

Precision DC Shunt Ammeter

PRODUCT OVERVIEW

The DMR35-DCA series of panel meter performs precision measurements of DC current and is available in two models offering ranges from 1A to 25A . The 3-1/2 digit numeric display supports precision measurement, and a fast-responding 21 segment bargraph tracks quickly-changing measured values.

The internal precision shunt resistors simplify the meter's use and allow for increased accuracy compared with solutions relying on external shunt resistors. Rear-accessible DIP switches are provided for the selection of measurement range and display brightness.

The meter is powered from an external 9-32VDC power supply and typically requires only 37 mA when operated at 12V. The measurement inputs provide +/-48V of common-mode input range, simplifying the meter's use in a wide range of applications.

The DMR35 family features a rugged polycarbonate housing that is mountable in a round hole using supplied screws, and is designed as a mechanical drop-in replacement for many commonly available analog movement meters, making it ideal for use in laboratory instrumentation, factory automation, and other applications requiring precise DC current monitoring

Features

- Bright, easily readable LED display
- Up to 3-1/2 digit measurements
- Bar-graph display scale
- 0.8 % measurement accuracy
- Precision internal shunt resistor
- Selectable current measurement ranges
- Unipolar/ Bipolar measurement options
- User-adjustable display brightness
- Mechanical drop-in replacement for common analog-movement meters
- Operates from 9 to 32 VDC
- Low current consumption, 37 mA typical at 12VDC
- RoHS Compliant
- Two year warranty

ORDERING INFORMATION:

MODEL NUMBER	DESCRIPTION
DMR35-DCA1-DC1-R	DC Ammeter, 1-5A ranges, 9-32VDC powered, red display
DMR35-DCA2-DC1-R	DC Ammeter, 10-25A ranges, 9-32VDC powered, red display

SIMPLIFIED BLOCK DIAGRAM

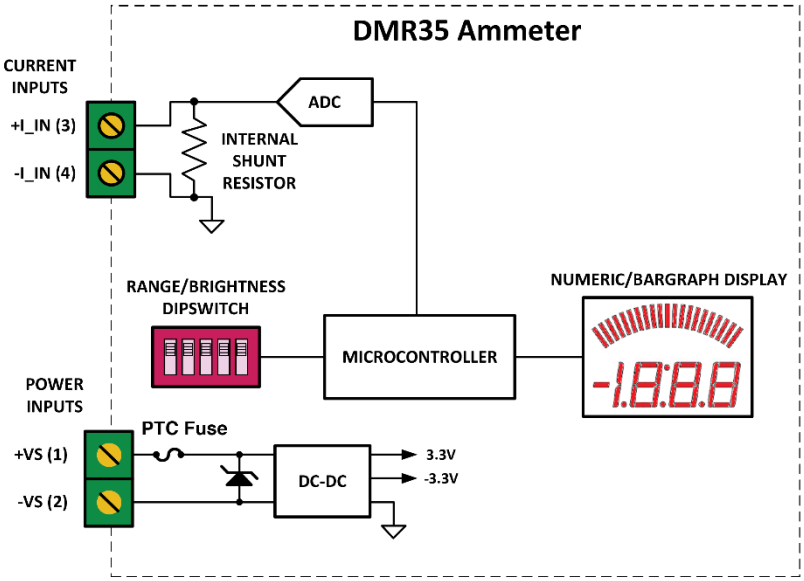

For full details go to
www.murata-ps.com/rohs

SPECIFICATIONS:

Measurement Performance	Min	Typ.	Max	Units
Measurement Ranges				
DMR35-DCA1	0-1, 0-2, 0-3, 0-5, ±1, ±2, ±3, ±5			A
DMR35-DCA2	0-10, 0-15, 0-20, 0-25, ±10, ±15, ±20, ±25			A
Accuracy (25 °C)			0.8% of reading + 2 counts	
Temperature Stability		0.01		% F.S. /°C
Burden voltage at highest range, full-scale input current (1)				
DMR35-DCA1 (5 A)		50		mV
DMR35-DCA2 (25 A)		50		mV
Absolute Maximum Input Current (+I_IN to –I_IN, applied for 1 minute max.) (2)				
DMR35-DCA1	-10		10	A
DMR35-DCA2	-27		27	A
Absolute Maximum voltage differential (either +I_IN or –I_IN to –VS) (2)	-48		+48	V

Notes:

1) 'Burden Voltage' is the voltage drop across the meter when measuring a current. Burden voltage is specified for a given input current – In this case the maximum rated current at the highest measurement range.
2) Exceeding Absolute Maximum ratings may result in permanent damage to the meter.

Power Supply Characteristics	Min	Typ.	Max	Units
Operating Supply Voltage	9		32	V
Absolute Maximum Supply Voltage	-1		34	V
Operating Supply Current				
12V supply		37		mA
24V supply		25		mA

Display & User Interface	
Display Type & Size	3-1/2 digit 7-segment, 11.4mm (0.45 in.) high 21 segment curved bar-graph
Display Color	Red (625nm)
Decimal Point Selection	Automatic
Out-of-range Indication	Flashing display
Measurement Range Selection	Dipswitch selectable (8 ranges)
Display Intensity Control	Dipswitch selectable (4 ranges)

Terminal Blocks	Small Terminals	Large Terminals (-DCA2 only)
Wire Size	14-24 AWG	10-24 AWG
Insulation Strip Length	6mm (0.24 in.)	10mm (0.39 in.)
Screw Tightening Torque	0.4 N-m (3.5 lb.-in)	1.13N-m (10 lb.-in)

Mechanical/Environmental				
Parameter	Min	Typ.	Max	Units
Operating Temperature	0		50	°C
Storage Temperature	-40		70	°C
Humidity (non-condensing)	0		85	%RH
Sealing (front face, when installed with included gasket)	Splash and dust resistant			
Mounting screws (4 included)	#4-20 0.5" thread forming			
Screw Tightening Torque	9 in-lb (1 N-m)			
Panel thickness when used with included mounting screws	0.062 in. (1.6mm)		0.25 in. (6.3mm)	
Dimensions	See Mechanical specifications for details			
Weight DCA1	2.3 (65)			oz. (g)
DCA2	2.7 (77)			

OPERATION:

Measurement Type and Capabilities

The DMR35 series of digital ammeters employ a precision ADC and a low-power microcontroller to measure DC current. These meters provide full-scale measurement ranges spanning 1 ampere to 25 amperes with extremely low burden voltages. These meters measurement systems supports a common-mode input voltage range of up to +/-48V with respect to the power supply return (-VS connection), simplifying high-side, low-side, and negative rail current measurements.

FRONT PANEL & FRONT PANEL LAYOUT AND FUNCTION

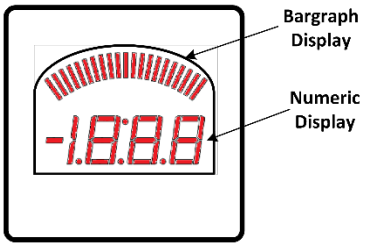

Bar-graph Display: The 21 segment bar-graph display responds quickly and smoothly like an analog meter movement to aid in reading rapidly changing measurements.

Numeric Display: The 3-1/2 digit display provides precise measurements for steady-state and slowly changing measurement values.

REAR PANEL LAYOUT AND SCREW TERMINAL CONNECTIONS

Four screw terminals are provided for power and measurement connections, as well as a 5-position DIP switch for meter configuration, as described below.

Rear Layout	Terminal #	Name	Function
DM35-DCA1 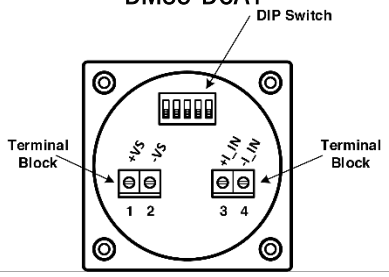	1	+VS	Power supply input terminals (9-32 VDC)
	2	-VS	
	3	+I_IN	Current measurement input terminals
	4	-I_IN	
DMR35-DCA2 (large terminal block for 25A) 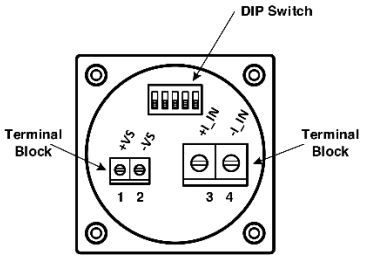	**DIP Switch**: Five individual switches support display intensity settings (SW1-SW2) and measurement range selection (SW3-SW5) Note: It is important to tighten all screw-terminals to their torque specifications. Proper tightening will help ensure reliable operation. Applications subject to vibration should use stranded wire.		

POWER SUPPLY CONNECTIONS

The meter is powered through the +VS and –VS terminals and requires a DC power supply which may range from 9VDC to 32VDC. This supply is electrically isolated from the meter's measurement electronics, so that the meter's measurement input terminals (+I_IN, -I_IN) do not need to be connected to the meter's power return terminal (-VS), and may vary as much as +/-48V from this connection. Please note that the meter's isolation barrier is intended only to simplify measurements, and not for safety purposes – the maximum voltage between the power supply terminals (+VS or –VS) and the measurement input terminals (+I_IN, -I_IN) must be limited to +/-48VDC. The DMR35 series of meters incorporates protection against momentary applications of both overvoltage and reverse polarity to the power supply(+VS, -VS) terminals. Depending on regulatory and application requirements it may also be necessary for the user to add external fusing.

MEASUREMENT INPUTS

Current to be measured by the DMR35 is passed through the +I_IN and –I_IN terminals. This requires that the meter be inserted in the line in which the current is to be measured. Unlike many panel meters, the DMR35 series' measurement inputs are electrically isolated from the power supply terminals, which allows for fully differential measurements over a common-mode range of +/-48V with respect to the power supply terminals +VS or -VS.

CONNECTION EXAMPLES

The schematic below shows how a DMR35 DC current meter can be used to perform a 'high-side' current measurement, where the meter is inserted into the load's positive leg. In this example, the meter is powered from the same power source powering the load, and the meter's current sensing terminals (+I_IN, -I_IN) are at a potential of 12 volts higher than the meter's negative power terminal (-VS). The meter can also just as easily be used to measure current in the load's negative leg ('low-side' current sensing).

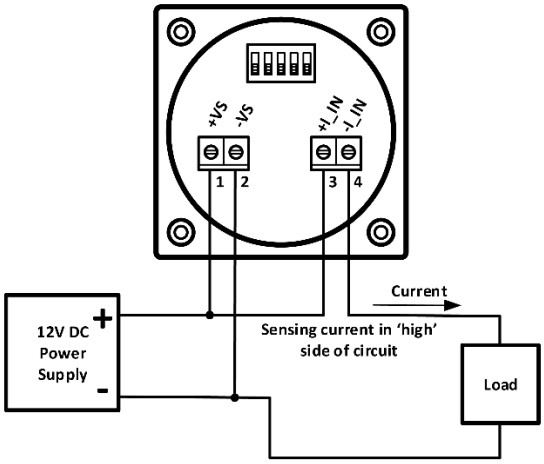

It is also possible to use the meter to monitor voltage in a circuit that is independent of the meter's power supply circuit, as shown in the schematic below. When used in this way, the meter's current measuring terminals may electrically float with respect to its power supply terminals, as long as the voltage difference between the two terminal pairs remains within +/- 48V of each other.

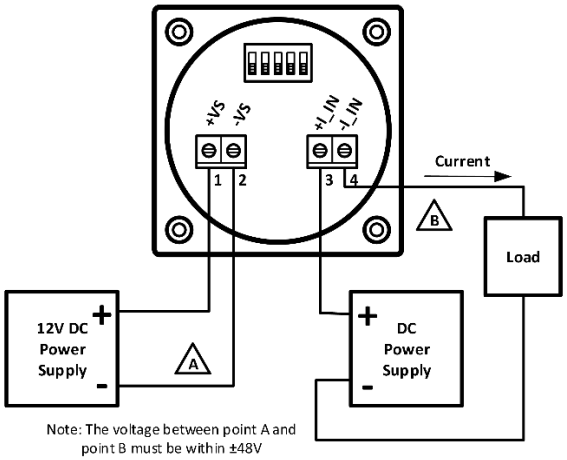

METER CONFIGURATION

Meter Range Settings

DMR35 meter configuration is controlled through a 5-position DIP switch (SW1-SW5) on the rear of the meter. The individual switches are labelled 1 through 5 on the unit, and the ON position of the switches is also labelled. These switches are used to select both the meter's measurement range and the display intensity (brightness).

Switches SW3 through SW5 select the meter's measurement range, as shown in the table below. Note that for these five meter models, switch SW3 selects either unipolar (OFF) or bipolar (ON) measurement ranges. Switches SW4 and SW5 select the magnitude of the measurement range.

Switch Setting				DMR35 Model	
SW3	SW4	SW5	DIP switch	-DCA1	-DCA2
OFF	OFF	OFF	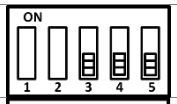	0-1 A	0-10 A
OFF	OFF	ON	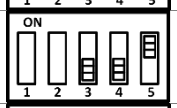	0-2 A	0-15 A
OFF	ON	OFF	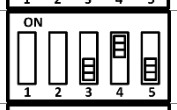	0-3 A	0-20 A
OFF	ON	ON	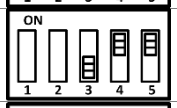	0-5 A	0-25 A
ON	OFF	OFF	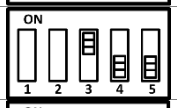	±1 A	±10 A
ON	OFF	ON	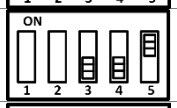	±2 A	±15 A
ON	ON	OFF	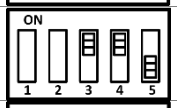	±3 A	±20 A
ON	ON	ON	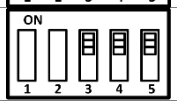	±5 A	±25 A

The meter behaves differently depending on whether bipolar or unipolar range setting is selected. When the meter is set to a bipolar range setting, it will display measurements over a +/- range, flashing the display to indicate overflow for input values greater than +RANGE, and flashing the display to indicate underflow for input values less than –RANGE. A zero-value measurement will illuminate a single center LED. Increasingly negative input values will illuminate the bargraph from center to the leftmost LED until all left-side LEDs are illuminated at negative full-scale, and increasingly positive input values will illuminate the bargraph from center to the rightmost LED until all right-side LEDs are illuminated at positive fullscale.

When set to a unipolar range setting, the meter will display measurements over a positive only range. Negative input values will result in an underflow condition of a flashing zero reading. Positive input values exceeding the maximum range will result in a flashing overflow condition. The bargraph will indicate a measurement of zero or less by illuminating the leftmost LED, and increasingly positive input values will illuminate the bargraph to the rightmost LED until all LEDs are illuminated at positive fullscale.

The DMR35 meter family provides the ability to adjust the display intensity to maximize readability over a range of ambient lighting conditions. Switches SW1 and SW2 select the display intensity, as shown in the table below. The meter provides for four settings (LOW, MEDIUM, HIGH, and HIGH+). Note that the HIGH2 setting results in only a slightly higher brightness than the HIGH setting.

Display Intensity Settings

Set the display intensity by setting the switches as shown:

SW1	SW2	Dipswitch	Display Intensity
OFF	OFF	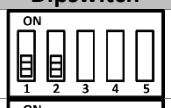	Low
OFF	ON	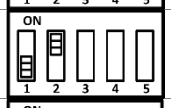	Medium
ON	OFF	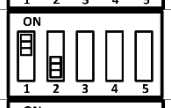	High
ON	ON	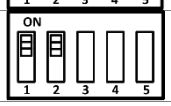	High2 †[3]

[3] Provides only slightly higher intensity than 'High' setting

TECHNICAL NOTES

1. Calibration

   The DMR35 is calibrated at the factory at manufacture. There are no user or field-adjustable calibration features.

2. Wiring

   Power supply and input wiring must be rated for the electrical and environmental conditions under which the meter will be operated. They must also comply with any regulatory or application-mandated requirements pertaining to the user's installation. The terminal blocks can accommodate wire gauges ranging from #14 to #24 AWG (#10-#24 for the large terminal blocks used on the DMR35-DCA2). Wiring Insulation should be stripped to the proper length as described in Terminal Block specifications table and wires must be inserted into the terminal block openings such that the screw terminal does not pinch any insulation. It is important to tighten all screw-terminals to their torque specification, which also may be found in the Terminal Block specifications table. Proper tightening will help ensure reliable operation. Applications subject to vibration should use stranded wire. After final assembly, inspect all terminal block connections for shorts between adjacent conductors; this step is especially important when using stranded wire.

3. Protection and Fusing

   DMR35 meters' power supply leads (+VS, -VS) are protected against momentary overvoltage and reverse polarity conditions. Input terminals +I_IN and –I_IN are protected against noise and brief transients. Protection, however, is not provided against sustained conditions exceeding the limits listed in in the Performance & Functional Specifications Table. External fusing must be supplied by the user in accordance to applicable safety and regulatory requirements for the system in which the DMR35 is installed.

4. Noisy Power Supplies

   Some power supplies contain high-frequency switching devices that may conduct and/or radiate significant noise onto the low-level signal developed across the measurement inputs. Even though the DMR35 incorporates built-in input filtering, some portion of this noise may be amplified and subsequently measured by its sensitive input circuitry. Limiting runs of wire to less than 3 meters (10 feet) is strongly recommended. Also, in systems with noisy power supplies, connecting an external, non-polarized capacitor across the +VS and -VS inputs can help reduce measurement errors. In certain situations, the use of twisted pair or shield wiring may be required.

5. Self-Diagnostics

   On power-on the meter performs a self-test and checks the integrity of calibration data stored in internal non-volatile memory. If the factory calibration data has been corrupted, the meter will display 'CAL' on power-on and approximately once a minute thereafter to indicate that the meter is relying on default calibration factors and that displayed measurements may have more than the datasheet-specified amount of error. If the meter detects other internal fault conditions, it will attempt to reset itself. Repeated restarts, which appear in the form of a highly intermittent display, are indicative of a hardware fault that cannot be cleared through a reset operation, in which case the meter should no longer be used.

PANEL INSTALLATION

Panel Drill Template

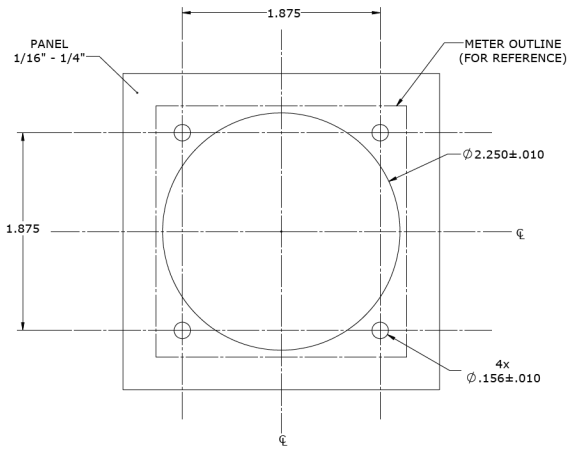

PANEL DRILLING TEMPLATE

Panel Mounting

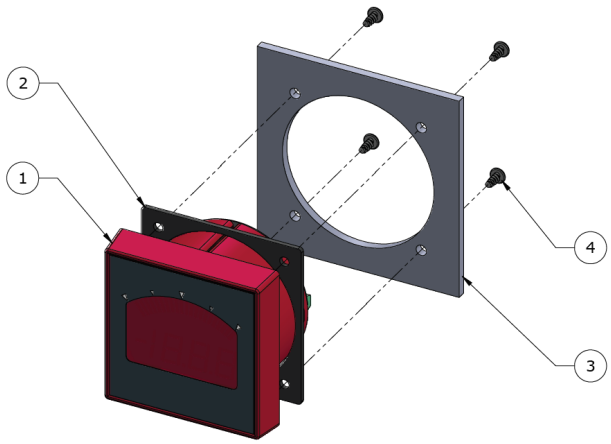

MECHANICAL SPECIFICATIONS

DMR35-DCA1-DC1-R

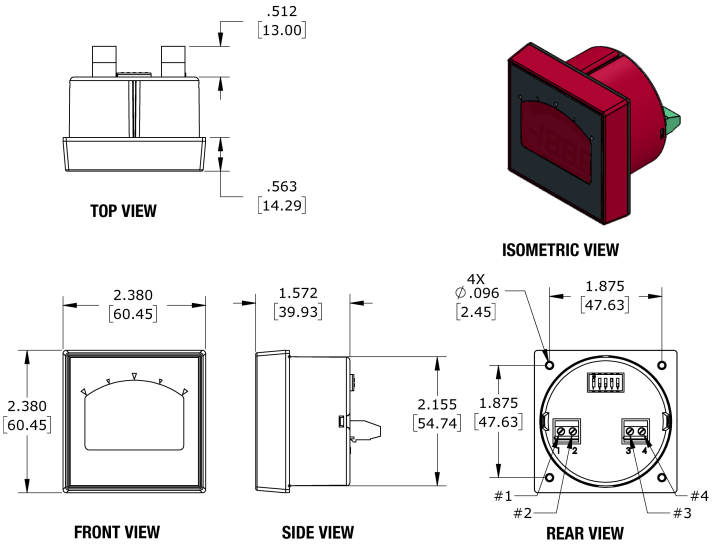

DMR35-DCA2-DC1-R

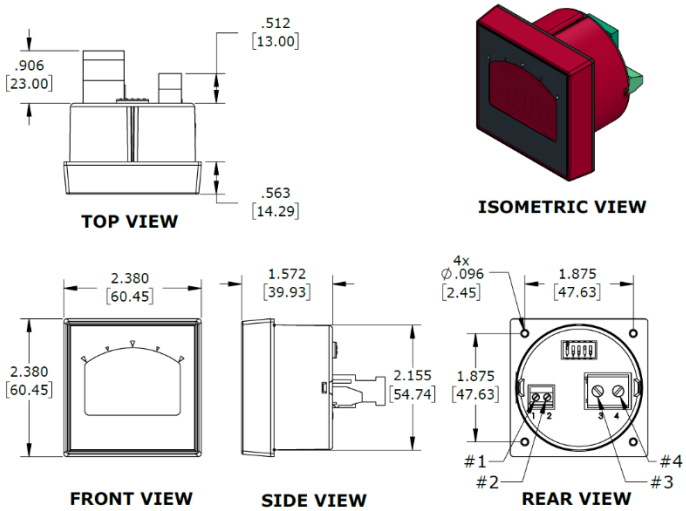

DIMENSIONS ARE IN INCHES [mm]

TOLERANCES:
2 PLACE ±.01 ANGLES: ±0.5°
3 PLACE ±.005

COMPONENTS SHOWN ARE FOR REFERENCE ONLY

MATERIAL:
HOUSING: POLYCARBONATE
GASKET: EPDM RUBBER