TAOGLAS

Datasheet

# 5.9GHz C-V2X Antenna

**Part No:**
**DCPP.25A.07.0150E**

**Description:**

5.9GHz C-V2X PTFE Patch Antenna on PCB board 30*30mm with 150mm RG-178 & IPEX MHFI 4.2dBi

**Features:**

5.9GHz C-V2X Ceramic Patch Antenna

5850MHz to 5925MHz

2.4dBi Gain

Cable: 150mm RG-178

Connector: IPEX MHFI

Dimensions: 30*30*5mm

Manufactured in an IATF16949 Approved Facility

ISO16750 Automotive Reliability Tested

RoHS & REACH Compliant

| | | |
|---|---|---|
| 1. | Introduction | 3 |
| 2. | Specifications | 4 |
| 3. | Antenna Characteristics | 5 |
| 4. | 2D Radiation Patterns | 9 |
| 5. | 3D Radiation Patterns | 11 |
| 6. | Mechanical Drawing | 12 |
| 7. | Packaging | 13 |
| | Changelog | 14 |


Taoglas makes no warranties based on the accuracy or completeness of the contents of this document and reserves the right to make changes to specifications and product descriptions at any time without notice. Taoglas reserves all rights to this document and the information contained herein.

Reproduction, use or disclosure to third parties without express permission is strictly prohibited.

Ireland ISO 9001: 2015 Certified

Taiwan ISO 9001: 2015 Certified

# 1. Introduction

The DCPP.25A is a 25*25*4mm PTFE patch antenna, designed to operate at 5850-5925MHz for C-V2X (& DSRC) systems. This antenna features high efficiency and circular polarization to enable a more stable system signal strength on moving vehicles where orientation is constantly changing.

Custom patch tuning is available to optimize to specific device environments, including off-center positioning or different ground plane sizes, subject to NRE and MOQ. The DCPP.25A is manufactured in an IATF16949 approved facility. Contact your regional Taoglas office for this and other support with integration and testing of antenna performance in your device.

C-V2X is the communications medium of choice for active safety V2V/V2X (Vehicle-to-Vehicle and Vehicle-to-Other) systems. Primarily allocated for vehicle safety applications, C-V2X supports high-speed, low-latency, short-range, V2V/V2X wireless communications.

For further optimization to customer-specific device environments and for support to integrate and test this antennas performance in your device, contact your regional Taoglas Customer Services Team

# 2. Specifications

| DSRC Antenna * | |
|---|---|
| Frequency | 5850~5925MHz |
| Efficiency | 46.88% |
| Peak Gain | 4.2 dBi |
| Average Gain | -3.29 dBi |
| Return Loss | <-6 in band |
| Polarization | RHCP |
| Axial Ratio | < 2 at zenith |
| Impedance | 50 Ohms |
| **Mechanical** | |
| Dimensions | 30*30*5mm |
| Cable | 150mm RG-178 |
| Connector | IPEX MHFI |
| Weight | 9.3g |
| **Environmental** | |
| Operating and Storage Temperature | -40°C to 85°C |
| Humidity | Non-condensing 65°C 95% RH |

# 3. Antenna Characteristics

## 3.1 Return Loss

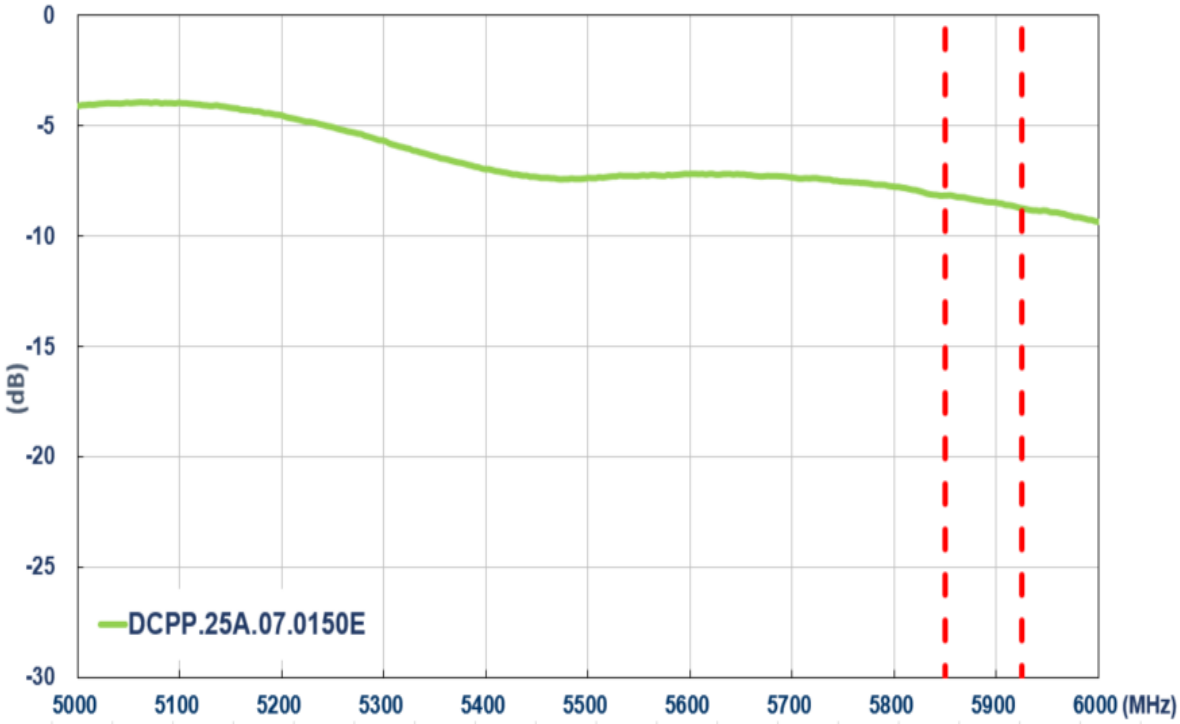


## 3.2 Efficiency

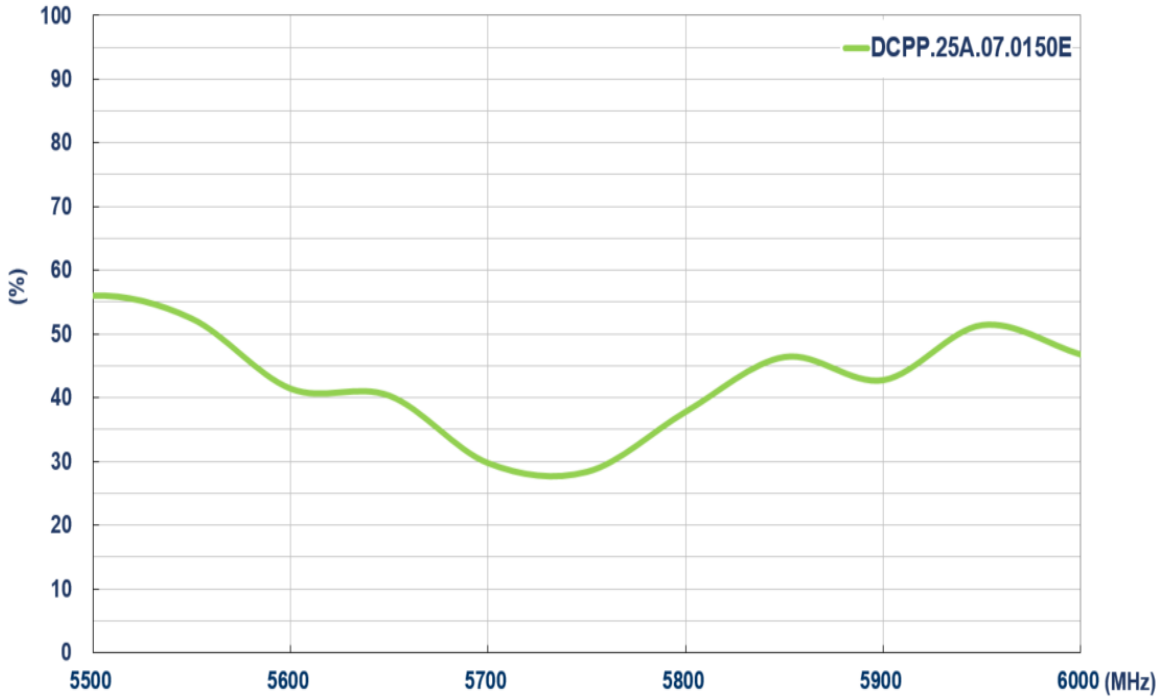

## 3.3 Average Gain

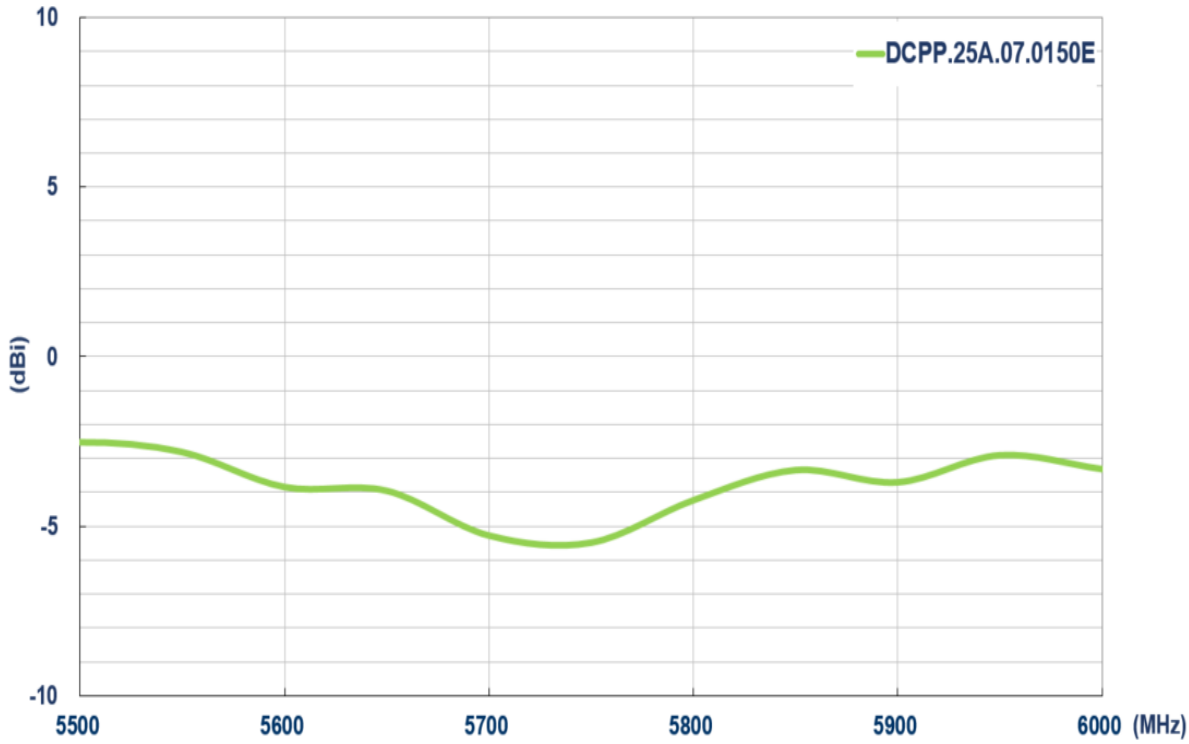


## 3.4 Peak Gain

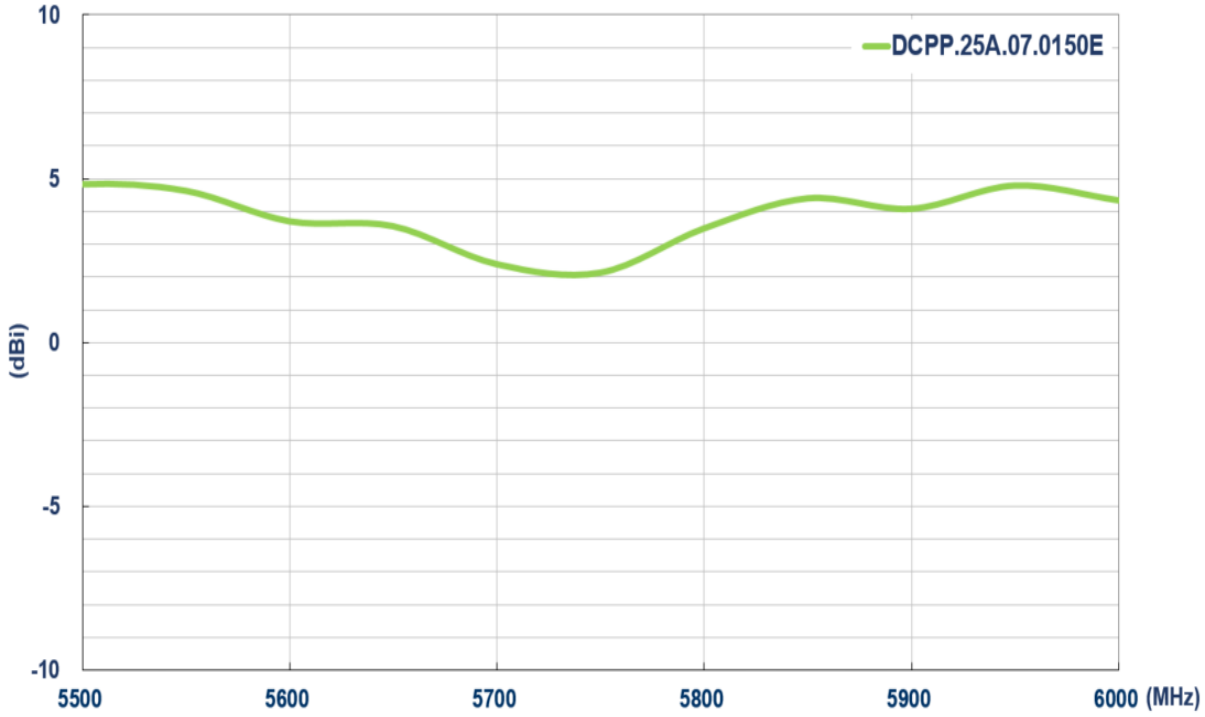

## 3.5 Axial Ratio – 5850MHz

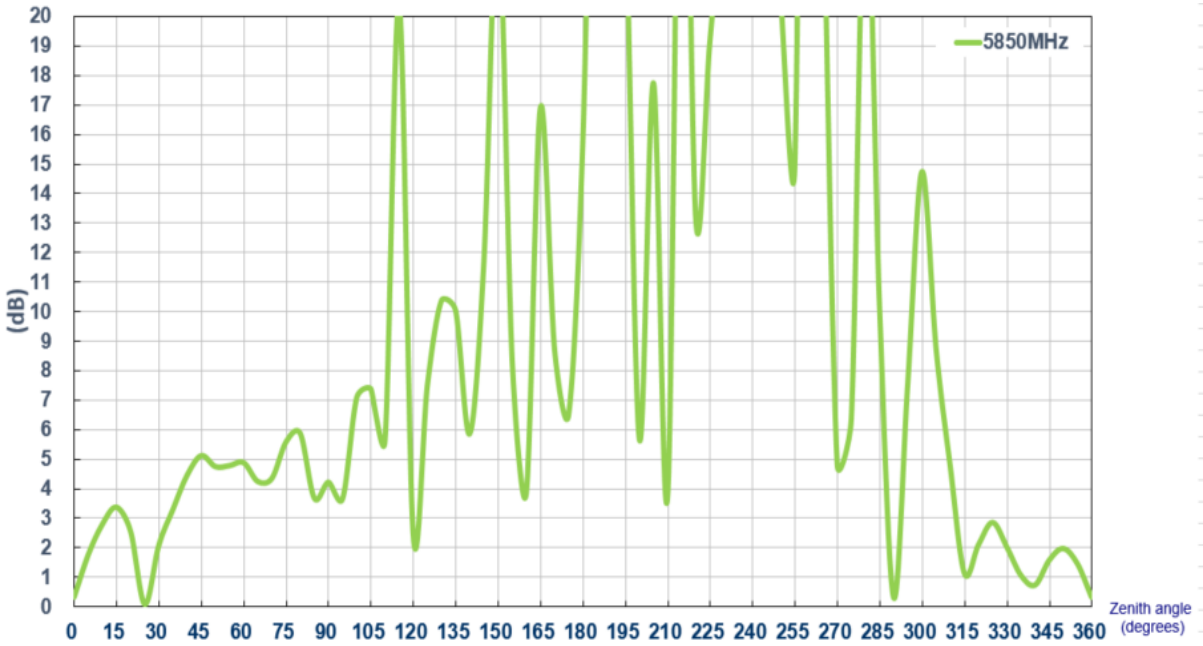


## 3.6 Axial Ratio – 5900MHz

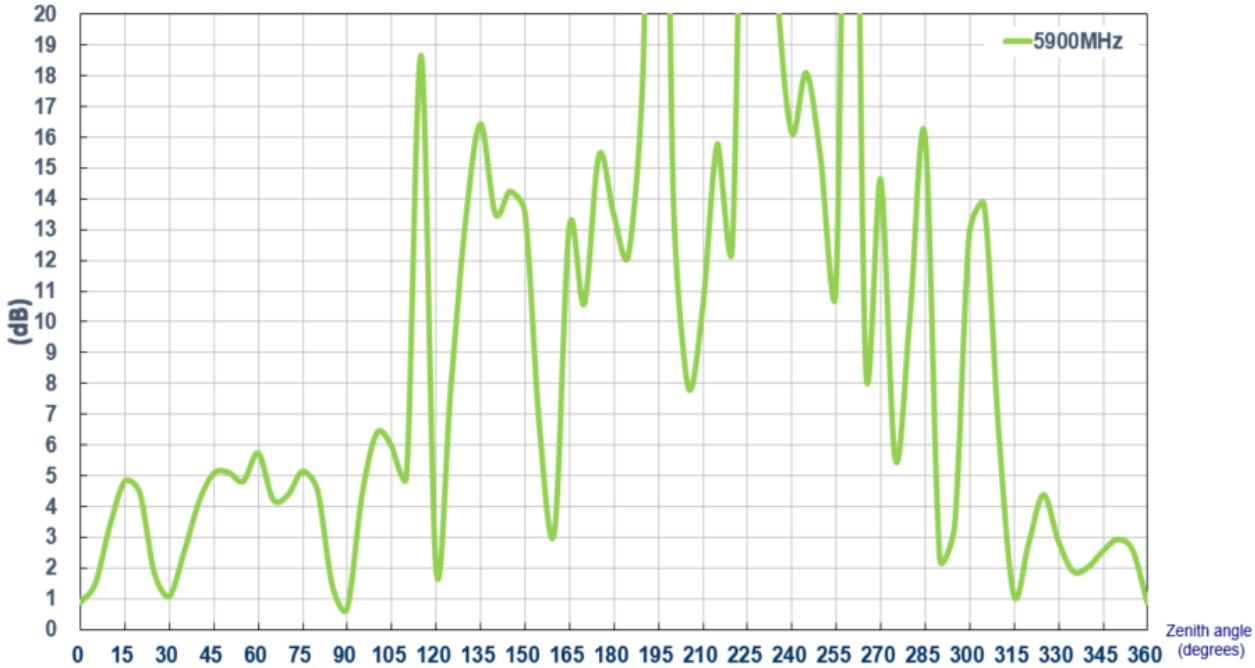

## 3.7 Axial Ratio – 5925MHz

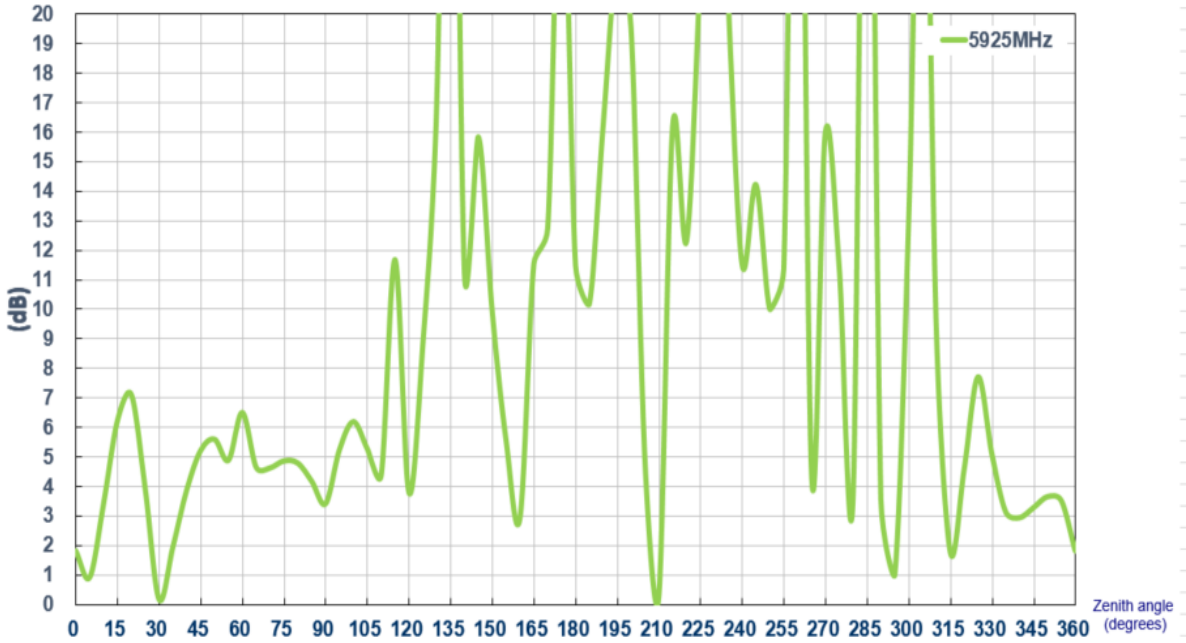


$0^{o}$ is toward Zenith

# 4. 2D Radiation Patterns

## 4.1 Test Setup

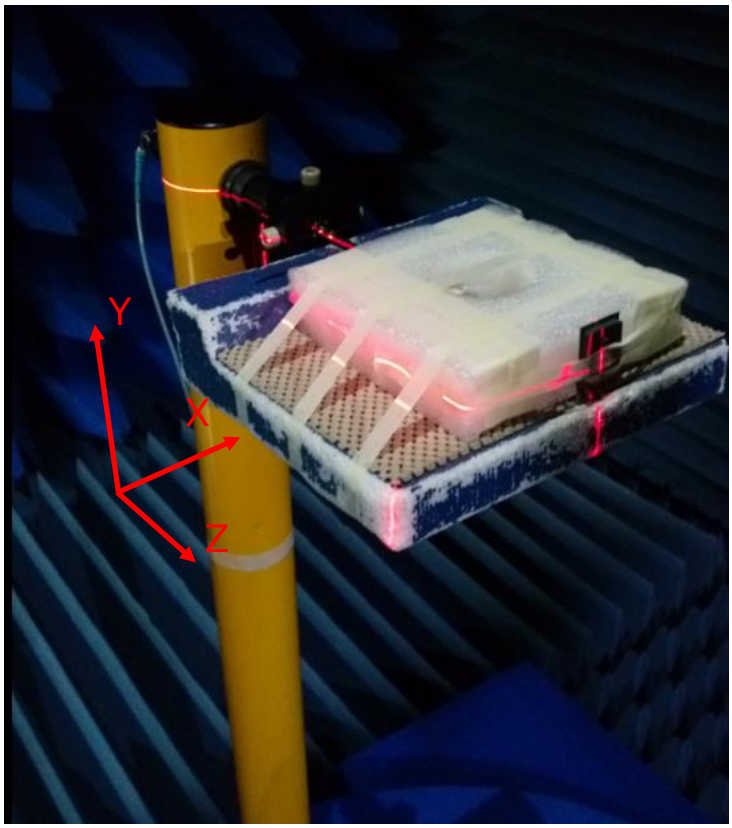


Free space

## XY Plane

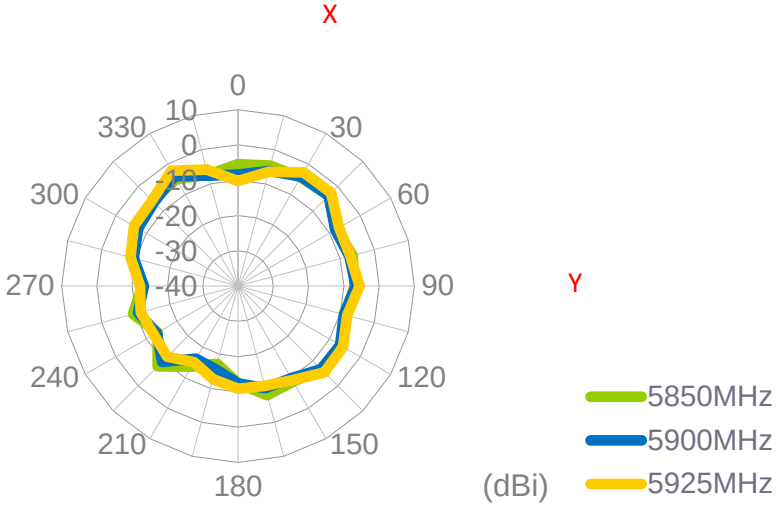


## XZ Plane

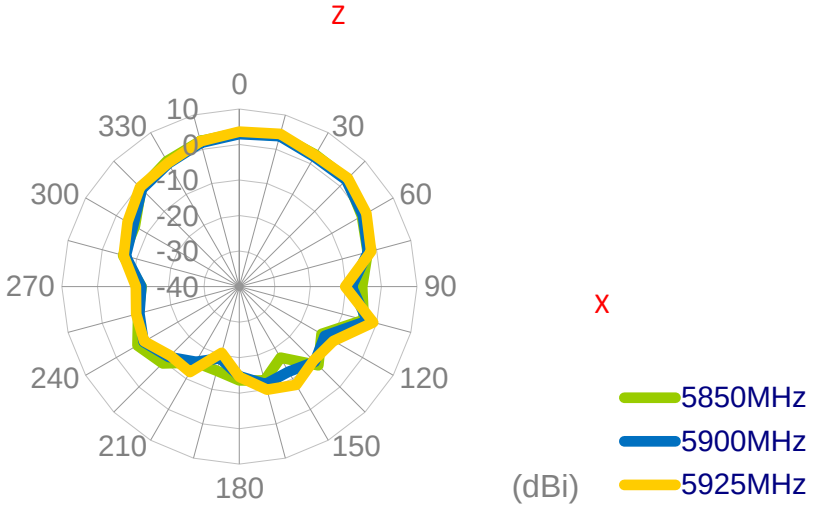


## YZ Plane

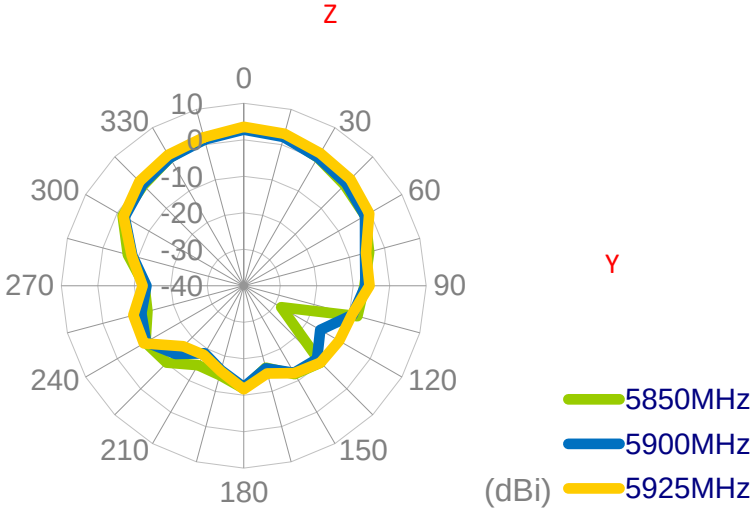

# 5. 3D Radiation Patterns

## 5.1 Free Space

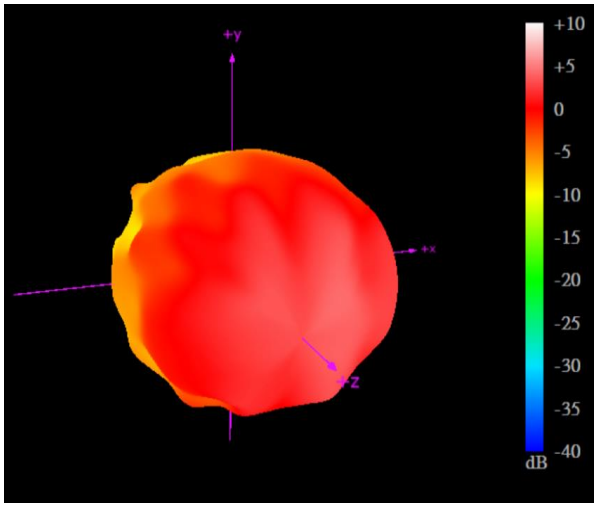


5850MHz

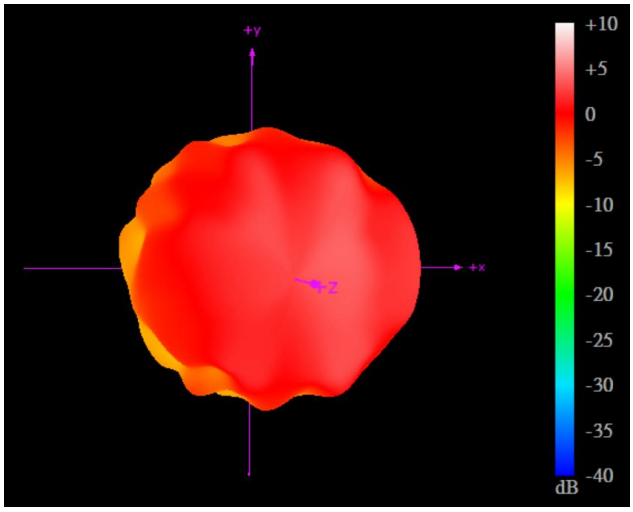


5900MHz

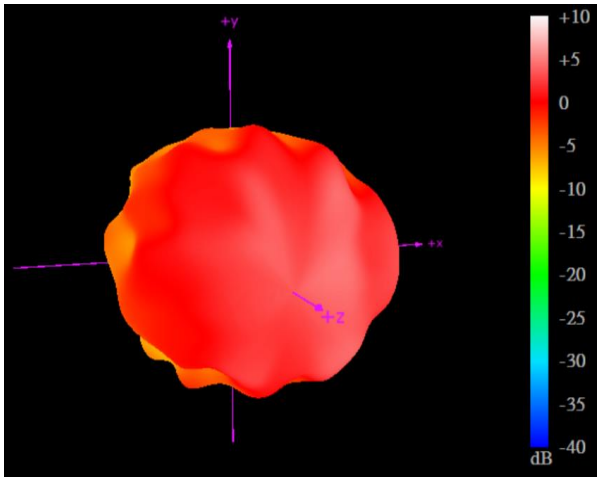


5925MHz

# 6. Mechanical Drawing (Units: mm)

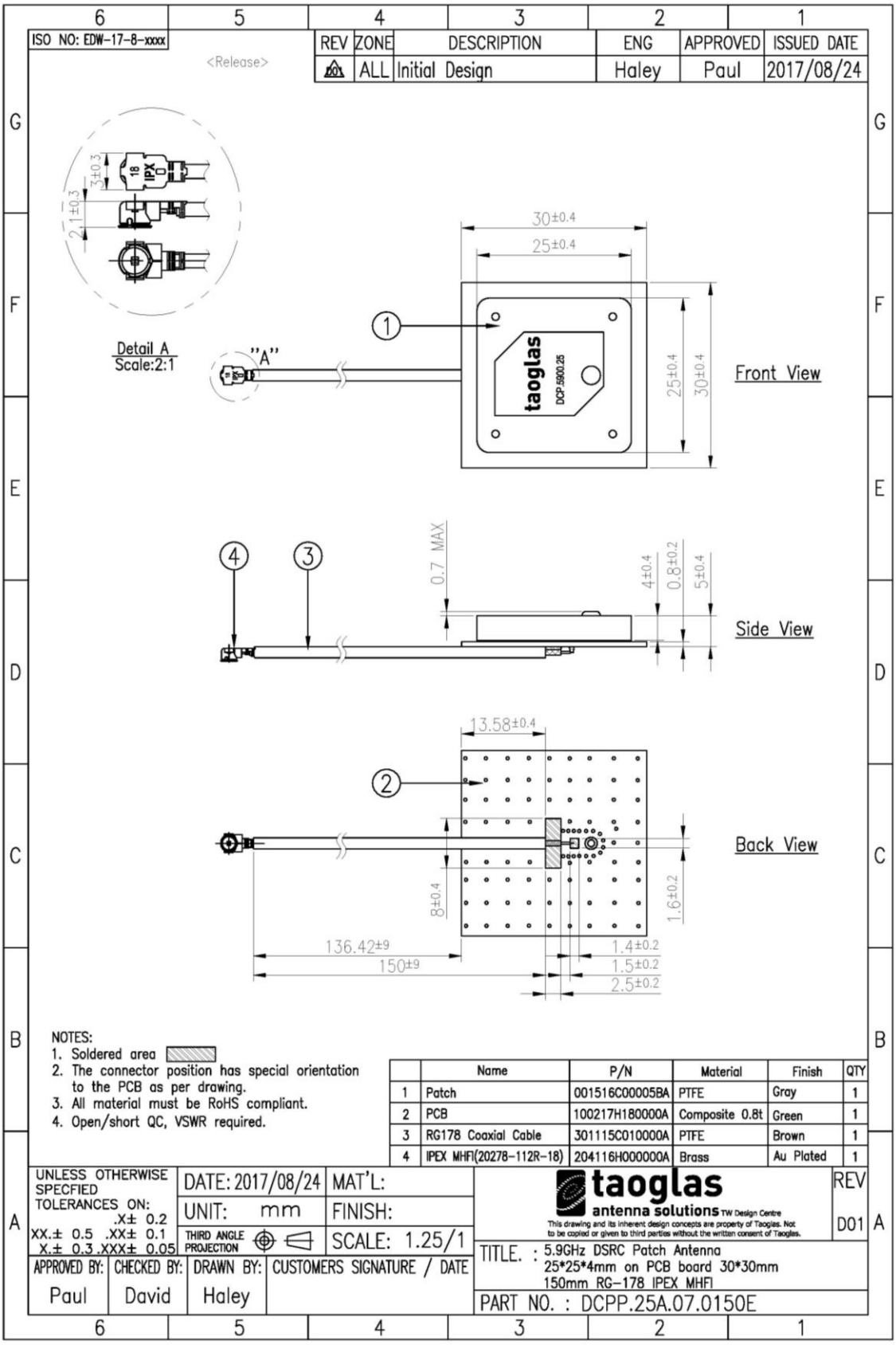

# 7. Packaging

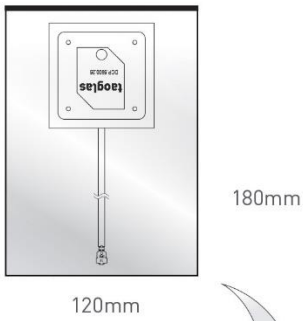


1pc DCPP.25A.07.0150E per small PE bag
Bag Dimensions - 180*120 mm
Weight - 10.5g

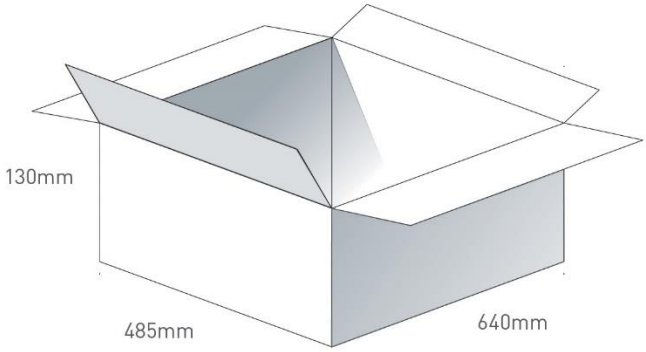


200pcs DCPP.25A.07.0150E per carton
Carton Dimensions - 485*640*130mm
Weight - 3.6Kg

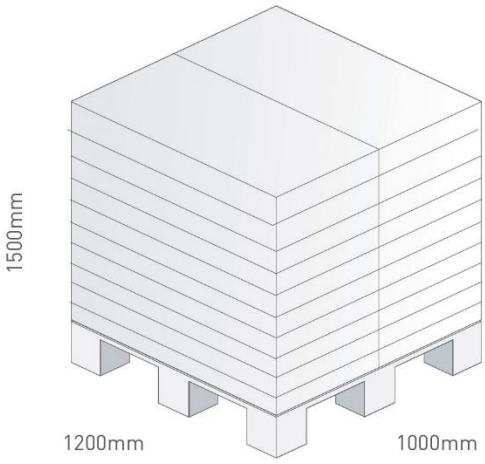


Pallet Dimensions 1200mm*1000mm*1500mm
20 Cartons per Pallet
2 Cartons per layer
10 Layers

Changelog for the datasheet

## SPE-18-8-051 – DCPP.25A.07.0150E

| Revision: C (Current Version) | |
|---|---|
| Date: | 2019-10-25 |
| Changes: | Updated to Include C-V2X |
| Changes Made by: | Jack Conroy |

### Previous Revisions

| Revision: B | |
|---|---|
| Date: | 2019-05-10 |
| Changes: | Data Amended and Format updated |
| Changes Made by: | Jack Conroy |

| Revision: A (Original First Release) | |
|---|---|
| Date: | 2018-04-27 |
| Notes: | |
| Author: | Jack Conroy |

TAOGLAS®

www.taoglas.com

© Taoglas