Safety Limit Switch

D4N

CSM_D4N_DS_E_6_1

Popular Safety Limit Switches Providing a Full Lineup Conforming to International Standards

- Lineup includes models with 1NC/1NO, 2NC, 2NC/1NO and 3NC contact forms.
  (Slow-action models with MBB contacts are available.)
- M12-connector models are also available, saving on labor and simplifying replacement.
- Standardized gold-clad contacts provide high contact reliability. Can be used with both standard loads and microloads.
- Conforms to EN115, EN81-1, and EN81-2 (slow-action models only).
- Certified standards: UL, EN (TÜV), and CCC

⚠ Be sure to read the *"Safety Precautions"* on page 17.

Note: Contact your sales representative for details on models with safety standard certification.

Model Number Structure

Model Number Legend

1-Conduit Models

D4N-□□□□
1 2 3

1. Conduit size
1: Pg13.5
2: G1/2
4: M20
9: M12 connector

2. Built-in Switch
1: 1NC/1NO (snap-action)
2: 2NC (snap-action)
A: 1NC/1NO (slow-action)
B: 2NC (slow-action)
C: 2NC/1NO (slow-action)
D: 3NC (slow-action)
E: 1NC/1NO (MBB contact) (slow-action)
F: 2NC/1NO (MBB contact) (slow-action)

3. Head and Actuator
20: Roller lever (resin lever, resin roller)
22: Roller lever (metal lever, resin roller)
25: Roller lever (metal lever, metal roller)
26: Roller lever (metal lever, bearing roller)
2G: Adjustable roller lever, form lock (metal lever, resin roller)
2H: Adjustable roller lever, form lock (metal lever, rubber roller)
31: Top Plunger
32: Top Roller Plunger
62: One-way roller arm lever (horizontal)
72: One-way roller arm lever (vertical)
80: Cat whisker
87: Plastic rod
RE: Fork lever lock (right operation)
LE: Fork lever lock (left operation)

2-Conduit Models

D4N-□□□□
1 2 3

1. Conduit size
6: G1/2
8: M20

2. Built-in Switch
1: 1NC/1NO (snap-action)
2: 2NC (snap-action)
A: 1NC/1NO (slow-action)
B: 2NC (slow-action)
C: 2NC/1NO (slow-action)
D: 3NC (slow-action)
E: 1NC/1NO (MBB contact) (slow-action)
F: 2NC/1NO (MBB contact) (slow-action)

3. Head and Actuator
20: Roller lever (resin lever, resin roller)
22: Roller lever (metal lever, resin roller)
25: Roller lever (metal lever, metal roller)
26: Roller lever (metal lever, bearing roller)
2G: Adjustable roller lever, form lock (metal lever, resin roller)
2H: Adjustable roller lever, form lock (metal lever, rubber roller)
31: Top Plunger
32: Top Roller Plunger
62: One-way roller arm lever (horizontal)
72: One-way roller arm lever (vertical)

Ordering Information

List of Models

Consult with your OMRON representative when ordering any models that are not listed in this table.

Switches with Two Contacts (with Direct Opening Mechanism)

Actuator	Conduit size		Built-in switch mechanism							
			1NC/1NO (Snap-action)		2NC (Snap-action)		1NC/1NO (Slow-action)		2NC (Slow-action)	
			Model	Direct opening	Model	Direct opening	Model	Direct opening	Model	Direct opening
Roller lever (resin lever, resin roller)	1-conduit	Pg13.5	D4N-1120	⊖	D4N-1220	⊖	D4N-1A20	⊖	D4N-1B20	⊖
		G1/2	D4N-2120		D4N-2220		D4N-2A20		D4N-2B20	
		M20	D4N-4120		D4N-4220		D4N-4A20		D4N-4B20	
		M12 connector	D4N-9120		D4N-9220		D4N-9A20		D4N-9B20	
	2-conduit	G1/2	D4N-6120	⊖	D4N-6220	⊖	D4N-6A20	⊖	D4N-6B20	⊖
		M20	D4N-8120		D4N-8220		D4N-8A20		D4N-8B20	
Roller lever (metal lever, resin roller)	1-conduit	Pg13.5	D4N-1122	⊖	D4N-1222	⊖	D4N-1A22	⊖	D4N-1B22	⊖
		G1/2	D4N-2122		D4N-2222		D4N-2A22		D4N-2B22	
		M20	D4N-4122		D4N-4222		D4N-4A22		D4N-4B22	
		M12 connector	D4N-9122		D4N-9222		D4N-9A22		D4N-9B22	
	2-conduit	G1/2	D4N-6122	⊖	D4N-6222	⊖	D4N-6A22	⊖	D4N-6B22	⊖
		M20	D4N-8122		D4N-8222		D4N-8A22		D4N-8B22	
Roller lever (metal lever, metal roller)	1-conduit	Pg13.5	D4N-1125	⊖	D4N-1225	⊖	D4N-1A25	⊖	D4N-1B25	⊖
		G1/2	D4N-2125		D4N-2225		D4N-2A25		D4N-2B25	
		M20	D4N-4125		D4N-4225		D4N-4A25		D4N-4B25	
		M12 connector	D4N-9125		D4N-9225		D4N-9A25		D4N-9B25	
Roller lever (metal lever, bearing roller)	1-conduit	Pg13.5	D4N-1126	⊖	D4N-1226	⊖	D4N-1A26	⊖	D4N-1B26	⊖
		G1/2	D4N-2126		D4N-2226		D4N-2A26		D4N-2B26	
		M20	D4N-4126		D4N-4226		D4N-4A26		D4N-4B26	
		M12 connector	D4N-9126		D4N-9226		D4N-9A26		D4N-9B26	
Adjustable roller lever, form lock (metal lever, resin roller)	1-conduit	Pg13.5	D4N-112G	⊖	D4N-122G	⊖	D4N-1A2G	⊖	D4N-1B2G	⊖
		G1/2	D4N-212G		D4N-222G		D4N-2A2G		D4N-2B2G	
		M20	D4N-412G		D4N-422G		D4N-4A2G		D4N-4B2G	
		M12 connector	D4N-912G		D4N-922G		D4N-9A2G		D4N-9B2G	
	2-conduit	G1/2	D4N-612G	⊖	D4N-622G	⊖	D4N-6A2G	⊖	D4N-6B2G	⊖
		M20	D4N-812G		D4N-822G		D4N-8A2G		D4N-8B2G	
Adjustable roller lever, form lock (metal lever, rubber roller)	1-conduit	Pg13.5	D4N-112H	⊖	D4N-122H	⊖	D4N-1A2H	⊖	D4N-1B2H	⊖
		G1/2	D4N-212H		D4N-222H		D4N-2A2H		D4N-2B2H	
		M20	D4N-412H		D4N-422H		D4N-4A2H		D4N-4B2H	
		M12 connector	D4N-912H		D4N-922H		D4N-9A2H		D4N-9B2H	
	2-conduit	G1/2	D4N-612H	⊖	D4N-622H	⊖	D4N-6A2H	⊖	D4N-6B2H	⊖
		M20	D4N-812H		D4N-822H		D4N-8A2H		D4N-8B2H	
Plunger	1-conduit	Pg13.5	D4N-1131	⊖	D4N-1231	⊖	D4N-1A31	⊖	D4N-1B31	⊖
		G1/2	D4N-2131		D4N-2231		D4N-2A31		D4N-2B31	
		M20	D4N-4131		D4N-4231		D4N-4A31		D4N-4B31	
		M12 connector	D4N-9131		D4N-9231		D4N-9A31		D4N-9B31	
	2-conduit	G1/2	D4N-6131	⊖	D4N-6231	⊖	D4N-6A31	⊖	D4N-6B31	⊖
		M20	D4N-8131		D4N-8231		D4N-8A31		D4N-8B31	
Roller plunger	1-conduit	Pg13.5	D4N-1132	⊖	D4N-1232	⊖	D4N-1A32	⊖	D4N-1B32	⊖
		G1/2	D4N-2132		D4N-2232		D4N-2A32		D4N-2B32	
		M20	D4N-4132		D4N-4232		D4N-4A32		D4N-4B32	
		M12 connector	D4N-9132		D4N-9232		D4N-9A32		D4N-9B32	
	2-conduit	G1/2	D4N-6132	⊖	D4N-6232	⊖	D4N-6A32	⊖	D4N-6B32	⊖
		M20	D4N-8132		D4N-8232		D4N-8A32		D4N-8B32	
One-way roller arm lever (horizontal)	1-conduit	Pg13.5	D4N-1162	⊖	D4N-1262	⊖	D4N-1A62	⊖	D4N-1B62	⊖
		G1/2	D4N-2162		D4N-2262		D4N-2A62		D4N-2B62	
		M20	D4N-4162		D4N-4262		D4N-4A62		D4N-4B62	
		M12 connector	D4N-9162		D4N-9262		D4N-9A62		D4N-9B62	
	2-conduit	G1/2	D4N-6162	⊖	D4N-6262	⊖	D4N-6A62	⊖	D4N-6B62	⊖
		M20	D4N-8162		D4N-8262		D4N-8A62		D4N-8B62	
One-way roller arm lever (vertical)	1-conduit	Pg13.5	D4N-1172	⊖	D4N-1272	⊖	D4N-1A72	⊖	D4N-1B72	⊖
		G1/2	D4N-2172		D4N-2272		D4N-2A72		D4N-2B72	
		M20	D4N-4172		D4N-4272		D4N-4A72		D4N-4B72	
		M12 connector	D4N-9172		D4N-9272		D4N-9A72		D4N-9B72	
	2-conduit	G1/2	D4N-6172	⊖	D4N-6272	⊖	D4N-6A72	⊖	D4N-6B72	⊖
		M20	D4N-8172		D4N-8272		D4N-8A72		D4N-8B72	

Switches with Three Contacts and MBB Contacts (with Direct Opening Mechanism)

Actuator	Conduit size		Built-in switch mechanism							
			2NC/1NO (Slow-action)		3NC (Slow-action)		1NC/1NO MBB (Slow-action)		2NC/1NO MBB (Slow-action)	
			Model	Direct opening	Model	Direct opening	Model	Direct opening	Model	Direct opening
Roller lever (resin lever, resin roller)	1-conduit	Pg13.5	D4N-1C20	⊖	D4N-1D20	⊖	D4N-1E20	⊖	D4N-1F20	⊖
		G1/2	D4N-2C20		D4N-2D20		D4N-2E20		D4N-2F20	
		M20	D4N-4C20		D4N-4D20		D4N-4E20		D4N-4F20	
		M12 connector	---		---		D4N-9E20		---	
	2-conduit	G1/2	D4N-6C20	⊖	D4N-6D20	⊖	D4N-6E20	⊖	D4N-6F20	⊖
		M20	D4N-8C20		D4N-8D20		D4N-8E20		D4N-8F20	
Roller lever (metal lever, resin roller)	1-conduit	Pg13.5	D4N-1C22	⊖	D4N-1D22	⊖	D4N-1E22	⊖	D4N-1F22	⊖
		G1/2	D4N-2C22		D4N-2D22		D4N-2E22		D4N-2F22	
		M20	D4N-4C22		D4N-4D22		D4N-4E22		D4N-4F22	
		M12 connector	---		---		D4N-9E22		---	
	2-conduit	G1/2	D4N-6C22	⊖	D4N-6D22	⊖	D4N-6E22	⊖	D4N-6F22	⊖
		M20	D4N-8C22		D4N-8D22		D4N-8E22		D4N-8F22	
Roller lever (metal lever, metal roller)	1-conduit	Pg13.5	D4N-1C25	⊖	D4N-1D25	⊖	D4N-1E25	⊖	D4N-1F25	⊖
		G1/2	D4N-2C25		D4N-2D25		D4N-2E25		D4N-2F25	
		M20	D4N-4C25		D4N-4D25		D4N-4E25		D4N-4F25	
		M12 connector	---		---		D4N-9E25		---	
Roller lever (metal lever, bearing roller)	1-conduit	Pg13.5	D4N-1C26	⊖	D4N-1D26	⊖	D4N-1E26	⊖	D4N-1F26	⊖
		G1/2	D4N-2C26		D4N-2D26		D4N-2E26		D4N-2F26	
		M20	D4N-4C26		D4N-4D26		D4N-4E26		D4N-4F26	
		M12 connector	---		---		D4N-9E26		---	
Adjustable roller lever, form lock (metal lever, resin roller)	1-conduit	Pg13.5	D4N-1C2G	⊖	D4N-1D2G	⊖	D4N-1E2G	⊖	D4N-1F2G	⊖
		G1/2	D4N-2C2G		D4N-2D2G		D4N-2E2G		D4N-2F2G	
		M20	D4N-4C2G		D4N-4D2G		D4N-4E2G		D4N-4F2G	
		M12 connector	---		---		D4N-9E2G		---	
	2-conduit	G1/2	D4N-6C2G	⊖	D4N-6D2G	⊖	D4N-6E2G	⊖	D4N-6F2G	⊖
		M20	D4N-8C2G		D4N-8D2G		D4N-8E2G		D4N-8F2G	
Adjustable roller lever, form lock (metal lever, rubber roller)	1-conduit	Pg13.5	D4N-1C2H	⊖	D4N-1D2H	⊖	D4N-1E2H	⊖	D4N-1F2H	⊖
		G1/2	D4N-2C2H		D4N-2D2H		D4N-2E2H		D4N-2F2H	
		M20	D4N-4C2H		D4N-4D2H		D4N-4E2H		D4N-4F2H	
		M12 connector	---		---		D4N-9E2H		---	
	2-conduit	G1/2	D4N-6C2H	⊖	D4N-6D2H	⊖	D4N-6E2H	⊖	D4N-6F2H	⊖
		M20	D4N-8C2H		D4N-8D2H		D4N-8E2H		D4N-8F2H	
Plunger	1-conduit	Pg13.5	D4N-1C31	⊖	D4N-1D31	⊖	D4N-1E31	⊖	D4N-1F31	⊖
		G1/2	D4N-2C31		D4N-2D31		D4N-2E31		D4N-2F31	
		M20	D4N-4C31		D4N-4D31		D4N-4E31		D4N-4F31	
		M12 connector	---		---		D4N-9E31		---	
	2-conduit	G1/2	D4N-6C31	⊖	D4N-6D31	⊖	D4N-6E31	⊖	D4N-6F31	⊖
		M20	D4N-8C31		D4N-8D31		D4N-8E31		D4N-8F31	
Roller plunger	1-conduit	Pg13.5	D4N-1C32	⊖	D4N-1D32	⊖	D4N-1E32	⊖	D4N-1F32	⊖
		G1/2	D4N-2C32		D4N-2D32		D4N-2E32		D4N-2F32	
		M20	D4N-4C32		D4N-4D32		D4N-4E32		D4N-4F32	
		M12 connector	---		---		D4N-9E32		---	
	2-conduit	G1/2	D4N-6C32	⊖	D4N-6D32	⊖	D4N-6E32	⊖	D4N-6F32	⊖
		M20	D4N-8C32		D4N-8D32		D4N-8E32		D4N-8F32	
One-way roller arm lever (horizontal)	1-conduit	Pg13.5	D4N-1C62	⊖	D4N-1D62	⊖	D4N-1E62	⊖	D4N-1F62	⊖
		G1/2	D4N-2C62		D4N-2D62		D4N-2E62		D4N-2F62	
		M20	D4N-4C62		D4N-4D62		D4N-4E62		D4N-4F62	
		M12 connector	---		---		D4N-9E62		---	
	2-conduit	G1/2	D4N-6C62	⊖	D4N-6D62	⊖	D4N-6E62	⊖	D4N-6F62	⊖
		M20	D4N-8C62		D4N-8D62		D4N-8E62		D4N-8F62	
One-way roller arm lever (vertical)	1-conduit	Pg13.5	D4N-1C72	⊖	D4N-1D72	⊖	D4N-1E72	⊖	D4N-1F72	⊖
		G1/2	D4N-2C72		D4N-2D72		D4N-2E72		D4N-2F72	
		M20	D4N-4C72		D4N-4D72		D4N-4E72		D4N-4F72	
		M12 connector	---		---		D4N-9E72		---	
	2-conduit	G1/2	D4N-6C72	⊖	D4N-6D72	⊖	D4N-6E72	⊖	D4N-6F72	⊖
		M20	D4N-8C72		D4N-8D72		D4N-8E72		D4N-8F72	

General-purpose Switches with Two Contacts

Actuator	Conduit size		Built-in switch mechanism							
			1NC/1NO (Snap-action)		2NC (Snap-action)		1NC/1NO (Slow-action)		2NC (Slow-action)	
			Model	Direct opening	Model	Direct opening	Model	Direct opening	Model	Direct opening
Fork lever lock (right operation)	1-conduit	G1/2	---		---		D4N-2ARE	---	D4N-2BRE	---
		M20					D4N-4ARE		D4N-4BRE	
Fork lever lock (left operation)		G1/2					D4N-2ALE		D4N-2BLE	
		M20					D4N-4ALE		D4N-4BLE	
Cat whisker		G1/2	D4N-2180	---	D4N-2280	---	---		D4N-2B80	
		M20	D4N-4180		D4N-4280				D4N-4B80	
Plastic rod		G1/2	D4N-2187		D4N-2287				D4N-2B87	
		M20	D4N-4187		D4N-4287				D4N-4B87	

Note: Mechanically speaking, these models are general-purpose switches with no direct opening mechanism.

General-purpose Switches with Three Contacts and MBB Contacts

Actuator	Conduit size		Built-in switch mechanism							
			2NC/1NO (Slow-action)		3NC (Slow-action)		1NC/1NO MBB (Slow-action)		2NC/1NO MBB (Slow-action)	
			Model	Direct opening	Model	Direct opening	Model	Direct opening	Model	Direct opening
Fork lever lock (right operation)	1-conduit	G1/2	D4N-2CRE	---	D4N-2DRE	---	D4N-2ERE	---	D4N-2FRE	---
		M20	D4N-4CRE		D4N-4DRE		D4N-4ERE		D4N-4FRE	
Fork lever lock (left operation)		G1/2	D4N-2CLE		D4N-2DLE		D4N-2ELE		D4N-2FLE	
		M20	D4N-4CLE		D4N-4DLE		D4N-4ELE		D4N-4FLE	
Cat whisker		G1/2	---		D4N-2D80		---		---	
		M20			D4N-4D80					
Plastic rod		G1/2			D4N-2D87					
		M20			D4N-4D87					

Note: Mechanically speaking, these models are general-purpose switches with no direct opening mechanism.

Specifications

Standards and EC Directives

Conforms to the following EC Directives:

- Machinery Directive
- Low Voltage Directive
- EN50047
- EN60204-1
- EN1088
- GS-ET-15

Certified Standards

Certification body	Standard	File No.
TÜV SÜD	EN60947-5-1 (certified direct opening)	✻1
UL ✻2	UL508, CSA C22.2 No.14	E76675
CQC (CCC) ✻3	GB14048.5	2004010305105973

✻1. Consult your OMRON representative for details.
✻2. Certification for CSA C22.2 No. 14 is authorized by the UL mark.
✻3. Ask your OMRON representative for information on certified models.

Certified Standard Ratings

TÜV (EN60947-5-1), CCC (GB14048.5)

Item / Utilization category	AC-15	DC-13
Rated operating current (I_e)	3 A	0.27 A
Rated operating voltage (U_e)	240 V	250 V

Note: Use a 10 A fuse type gI or gG that conforms to IEC60269 as a short-circuit protection device. This fuse is not built into the Switch.

UL/CSA (UL508, CSA C22.2 No. 14)

A300

Rated voltage	Carry current	Current (A)		Volt-amperes (VA)	
		Make	Break	Make	Break
120 VAC	10 A	60	6	7,200	720
240 VAC		30	3		

Q300

Rated voltage	Carry current	Current (A)		Volt-amperes (VA)	
		Make	Break	Make	Break
125 VDC	2.5 A	0.55	0.55	69	69
250 VDC		0.27	0.27		

Characteristics

Degree of protection ✻1		IP67 (EN60947-5-1)
Durability ✻2	**Mechanical**	15,000,000 operations min. ✻5
	Electrical	500,000 operations min. (3 A resistive load at 250 VAC) ✻3 300,000 operations min. (10 A resistive load at 250 VAC)
Operating speed		1 to 500 mm/s (D4N-1120)
Operating frequency		30 operations/minute max.
Contact resistance		25 mΩ max.
Minimum applicable load ✻4		1 mA resistive load at 5 VDC (N-level reference value)
Rated insulation voltage (U_i)		300 V
Rated frequency		50/60 Hz
Protection against electric shock		Class II (double insulation)
Pollution degree (operating environment)		3 (EN60947-5-1)
Impulse withstand voltage (EN60947-5-1)	**Between terminals of same polarity**	2.5 kV
	Between terminals of different polarity	4 kV
	Between each terminal and non-current carrying metallic parts	6 kV
Insulation resistance		100 MΩ min.
Contact gap		Snap-action: 2 × 0.5 mm min. Slow-action: 2 × 2 mm min.
Vibration resistance	**Malfunction**	10 to 55 Hz, 0.75 mm single amplitude
Shock resistance	**Destruction**	1,000 m/s^2 min.
	Malfunction	300 m/s^2 min.
Conditional short-circuit current		100 A (EN60947-5-1)
Conventional free air thermal current (I_{th})		10 A (EN60947-5-1)
Ambient operating temperature		–30 to 70°C (with no icing)
Ambient operating humidity		95% max.
Weight		Approx. 82 g (D4N-1120) Approx. 99 g (D4N-6120)

Note: 1. The above values are initial values.
2. Once a contact has been used to switch a standard load, it cannot be used for a load of a smaller capacity. Doing so may result in roughening of the contact surface and contact reliability may be lost.

✻1. The degree of protection is tested using the method specified by the standard (EN60947-5-1). Confirm that sealing properties are sufficient for the operating conditions and environment beforehand. Although the switch box is protected from dust or water penetration, do not use the D4N in places where foreign material such as dust, dirt, oil, water, or chemicals may penetrate through the head. Otherwise, accelerated wear, Switch damage or malfunctioning may occur.

✻2. The durability is for an ambient temperature of 5 to 35°C and an ambient humidity of 40% to 70%. For more details, consult your OMRON representative.

✻3. Do not pass the 3 A, 250 VAC load through more than 2 circuits.

✻4. This value will vary with the switching frequency, environment, and reliability level. Confirm that correct operation is possible with the actual load beforehand.

✻5. The mechanical durability of fork lever lock models is 10,000,000 operations min.

Structure and Nomenclature

Structure

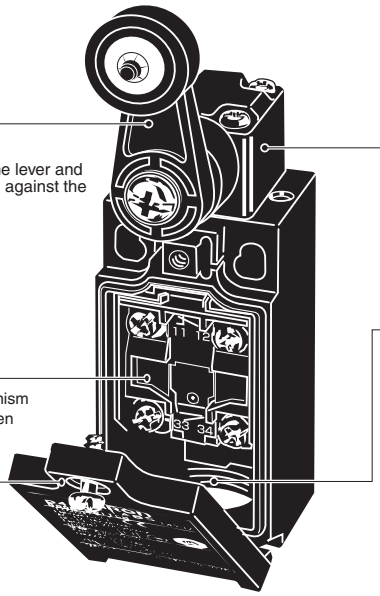

Safety-oriented Lever Setting (Form-lock construction)
Grooves which engage the lever are cut in the lever and rotary shaft to prevent the lever from slipping against the rotary shaft.
There are resin-lever and metal-lever types.

Built-in Switch
The built-in switch has a direct opening mechanism that forcibly separates the NC contact even when there is contact deposit.

Cover
The cover, with a hinge on its lower part, can be opened by removing the screw of the cover, which ensures ease of maintenance and wiring.

Head
The direction of the switch head can be varied to any of the four directions. (Roller plunger models can be mounted in either of two directions at a 90° angle.)

Conduit Opening
A wide variety of conduits is available.

Size Box	1-conduit	2-conduit
Pg13.5	Yes	---
G1/2	Yes	Yes
M20	Yes	Yes
M12 connector	Yes	---

Note: M12 connector types are not available for Switches with three contacts.

Direct Opening Mechanism

1NC/1NO Contact (Slow-action)

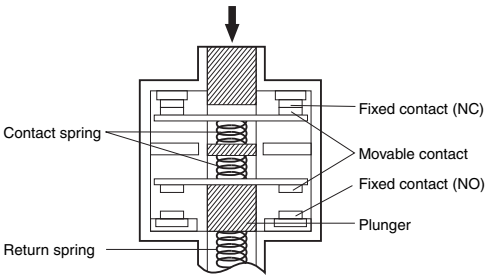

Conforms to EN60947-5-1 Direct Opening Operation ⊖

(Only the NC contact side has a direct opening mechanism.)
When contact welding occurs, the contacts are separated from each other by the plunger being pushed in.

2NC Contact (Slow-action)

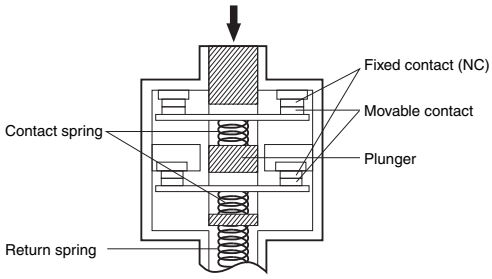

Conforms to EN60947-5-1 Direct Opening Operation ⊖

(Both NC contacts have a direct opening mechanism.)
When contact welding occurs, the contacts are separated from each other by the plunger being pushed in.

Contact Form

Model	Contact	Contact form	Operating pattern	Remarks
D4N-□1□	1NC/1NO (Snap-action)	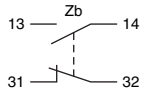	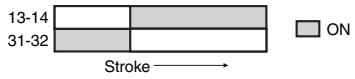	Only NC contacts 31-32 have a certified direct opening mechanism. ⊖ The terminals 13-14 and 31-32 can be used as unlike poles.
D4N-□2□	2NC (Snap-action)	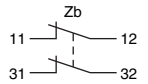	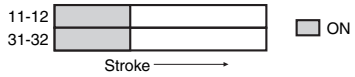	Only NC contacts 11-12 and 31-32 have a certified direct opening mechanism. ⊖ The terminals 11-12 and 31-32 can be used as unlike poles.
D4N-□A□	1NC/1NO (Slow-action)	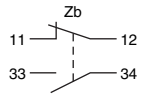	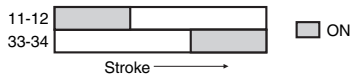	Only NC contacts 11-12 have a certified direct opening mechanism. ⊖ The terminals 11-12 and 33-34 can be used as unlike poles.
D4N-□B□	2NC (Slow-action)	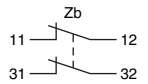	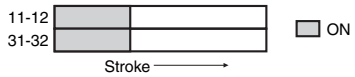	Only NC contacts 11-12 and 31-32 have a certified direct opening mechanism. ⊖ The terminals 11-12 and 31-32 can be used as unlike poles.
D4N-□C□	2NC/1NO (Slow-action)	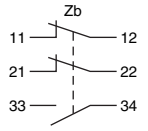	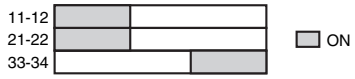	Only NC contacts 11-12 and 21-22 have a certified direct opening mechanism. ⊖ The terminals 11-12, 21-22, and 33-34 can be used as unlike poles.
D4N-□D□	3NC (Slow-action)	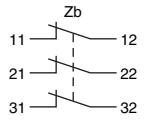	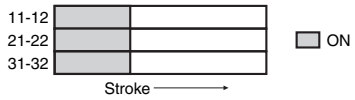	Only NC contacts 11-12, 21-22, and 31-32 have a certified direct opening mechanism. ⊖ The terminals 11-12, 21-22, and 31-32 can be used as unlike poles.
D4N-□E□	1NC/1NO MBB ✻ (Slow-action)	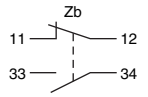	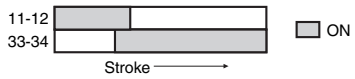	Only NC contacts 11-12 have a certified direct opening mechanism. ⊖ The terminals 11-12 and 33-34 can be used as unlike poles.
D4N-□F□	2NC/1NO MBB ✻ (Slow-action)	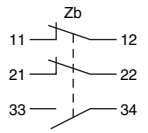	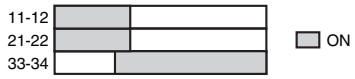	Only NC contacts 11-12 and 21-22 have a certified direct opening mechanism. ⊖ The terminals 11-12, 21-22 and 33-34 can be used as unlike poles.

Note: Terminals are numbered according to EN50013 and the contact forms are according to IEC947-5-1.
✻ MBB (Make Before Break) contacts have an overlapping structure, so that before the normally closed contact (NC) opens, the normally open contact (NO) closes.

Dimensions and Operating Characteristics

(Unit: mm)

Switches

1-conduit Models

Roller Lever (Resin Lever, Resin Roller)
D4N-1□20 D4N-2□20
D4N-4□20 D4N-9□20 ✻

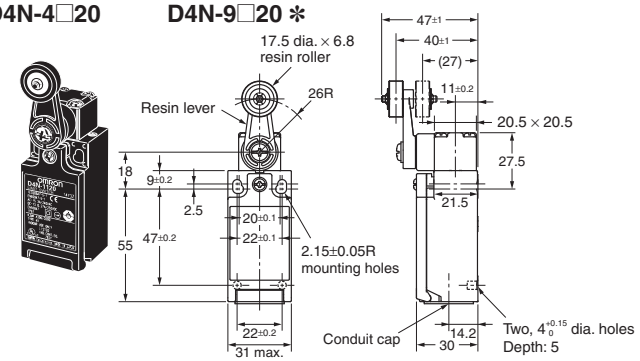

Roller Lever (Metal Lever, Resin Roller)
D4N-1□22 D4N-2□22
D4N-4□22 D4N-9□22 ✻

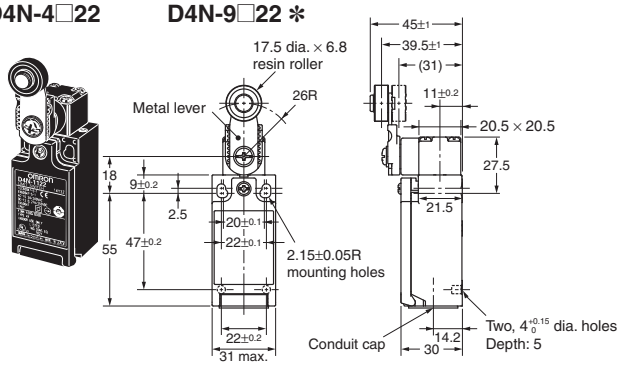

Roller Lever (Metal Lever, Metal Roller)
D4N-1□25 D4N-2□25
D4N-4□25 D4N-9□25 ✻

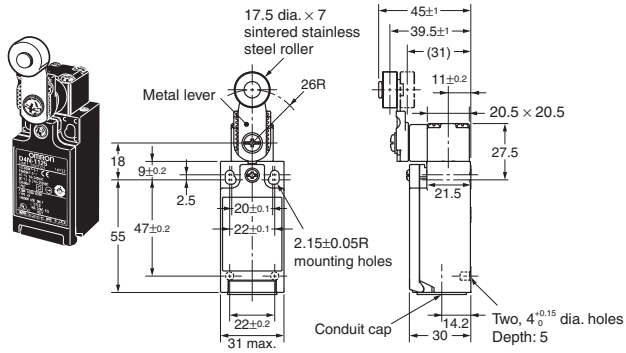

Roller Lever (Metal Lever, Bearing Roller)
D4N-1□26 D4N-2□26
D4N-4□26 D4N-9□26 ✻

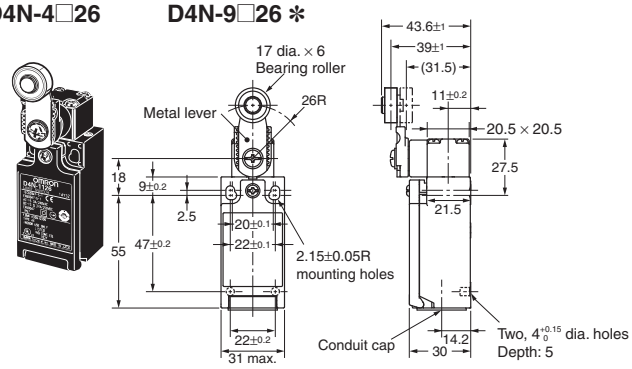

Note: Unless otherwise specified, a tolerance of ±0.4 mm applies to all dimensions.
✻ Refer to page 12 for details on M12 connectors.

Snap-action (1NC/1NO) (2NC), Slow-action (2NC) (3NC)

Operating characteristics		Model	D4N-□120 D4N-□220 D4N-□B20 D4N-□D20	D4N-□122 D4N-□222 D4N-□B22 D4N-□D22	D4N-□125 D4N-□225 D4N-□B25 D4N-□D25	D4N-□126 D4N-□226 D4N-□B26 D4N-□D26
Operating force	OF max.		5.0 N			
Release force	RF min.		0.5 N			
Pretravel	PT		18° to 27°			
Overtravel	OT min.		40°			
Movement differential	MD max. ✻1		14°			
Operating position	OP		---			
Total travel	TT ✻2		(80°)			
Direct opening travel	DOT min. ✻3		50°			
Direct opening force	DOF min. ✻3		20 N			

Note: Variation occurs in the simultaneity of contact opening/closing operations of 2NC, 2NC/1NO, and 3NC contacts. Check contact operation.
✻1. Only for snap-action models.
✻2. Reference value.
✻3. For safe use, always make sure that the minimum values or greater are provided.

Slow-action (1NC/1NO) (2NC/1NO)

Operating characteristics		Model	D4N-□A20 D4N-□C20 D4N-□E20 D4N-□F20	D4N-□A22 D4N-□C22 D4N-□E22 D4N-□F22	D4N-□A25 D4N-□C25 D4N-□E25 D4N-□F25	D4N-□A26 D4N-□C26 D4N-□E26 D4N-□F26
Operating force	OF max.		5.0 N			
Release force	RF min.		0.5 N			
	PT (NC)		18° to 27°			
	PT (NO) ✻1		(44°)			
	PT (NC) ✻2		27.5° to 36.5°			
	PT (NO) ✻1, ✻2		(18°)			
Overtravel	OT min.		40°			
Operating position	OP		---			
Total travel	TT ✻1		(80°)			
Direct opening travel	DOT min. ✻3		50°			
Direct opening force	DOF min. ✻3		20 N			

✻1. Reference values.
✻2. Only for MBB models. (D4N-□E□□ or D4N-□F□□)
✻3. For safe use, always make sure that the minimum values or greater are provided.

1-conduit Models

Plunger
D4N-1□31 D4N-2□31
D4N-4□31 D4N-9□31 ✻

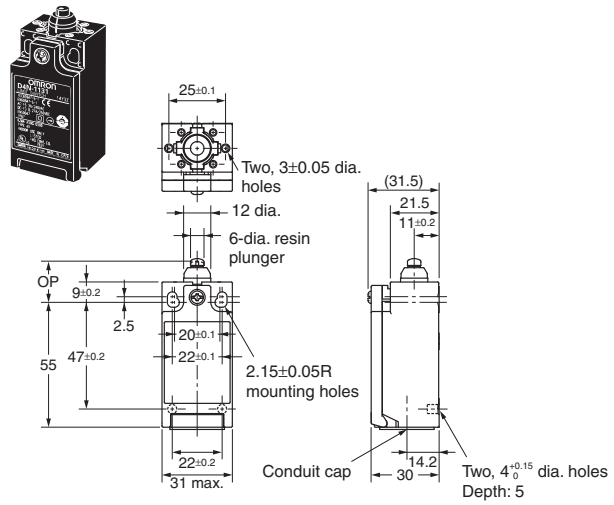

Roller Plunger
D4N-1□32 D4N-2□32
D4N-4□32 D4N-9□32 ✻

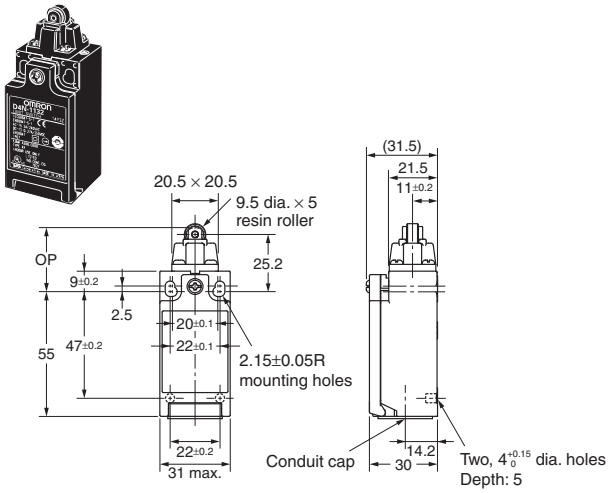

One-way Roller Arm Lever (Horizontal)
D4N-1□62 D4N-2□62
D4N-4□62 D4N-9□62 ✻

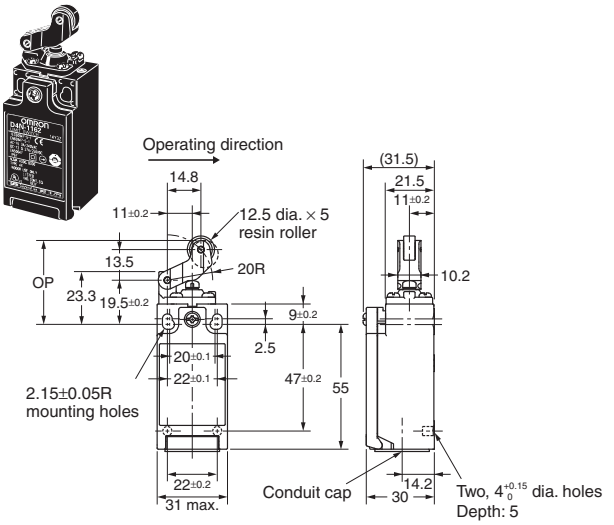

One-way Roller Arm Lever (Vertical)
D4N-1□72 D4N-2□72
D4N-4□72 D4N-9□72 ✻

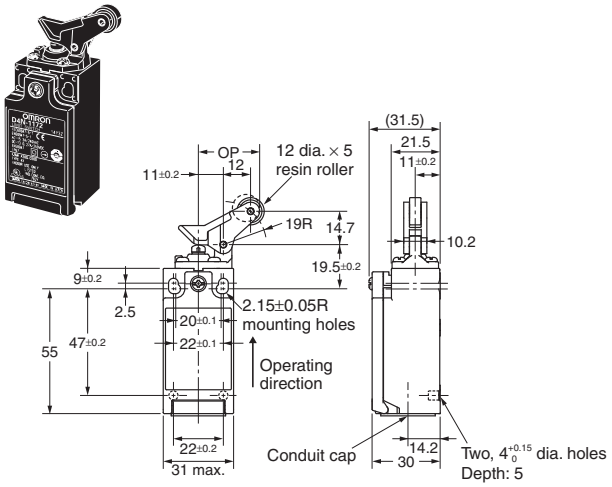

Note: Unless otherwise specified, a tolerance of ±0.4 mm applies to all dimensions.
✻ Refer to page 12 for details on M12 connectors.

Snap-action (1NC/1NO) (2NC), Slow-action (2NC) (3NC)

Operating characteristics	Model	D4N-□131 D4N-□231 D4N-□B31 D4N-□D31	D4N-□132 D4N-□232 D4N-□B32 D4N-□D32	D4N-□162 D4N-□262 D4N-□B62 D4N-□D62	D4N-□172 D4N-□272 D4N-□B72 D4N-□D72
Operating force	**OF max.**	6.5 N	6.5 N	5.0 N	5.0 N
Release force	**RF min.**	1.5 N	1.5 N	0.8 N	0.8 N
Pretravel	**PT max.**	2 mm	2 mm	4 mm	4 mm
Overtravel	**OT min.**	4 mm	4 mm	5 mm	5 mm
Movement differential	**MD max. ✱1**	1 mm	1 mm	1.5 mm	1.5 mm
Operating position	**OP**	18.2 ±0.5 mm	28.6 ±0.8 mm	37 ±0.8 mm	27 ±0.8 mm
Total travel	**TT ✱2**	(6 mm)	(6 mm)	(9 mm)	(9 mm)
Direct opening travel	**DOT min. ✱3**	3.2 mm	3.2 mm	5.8 mm	4.8 mm
Direct opening force	**DOF min. ✱3**	20 N	20 N	20 N	20 N

Note: Variation occurs in the simultaneity of contact opening/closing operations of 2NC, 2NC/1NO, and 3NC contacts. Check contact operation.

✱1. Only for snap-action models.
✱2. Reference value.
✱3. For safe use, always make sure that the minimum values or greater are provided.

Slow-action (1NC/1NO) (2NC/1NO)

Operating characteristics	Model	D4N-□A31 D4N-□C31 D4N-□E31 D4N-□F31	D4N-□A32 D4N-□C32 D4N-□E32 D4N-□F32	D4N-□A62 D4N-□C62 D4N-□E62 D4N-□F62	D4N-□A72 D4N-□C72 D4N-□E72 D4N-□F72
Operating force	**OF max.**	6.5 N	6.5 N	5.0 N	5.0 N
Release force	**RF min.**	1.5 N	1.5 N	0.8 N	0.8 N
Pretravel	**PT max. (NC)**	2 mm	2 mm	4 mm	4 mm
	PT (NO) ✱1	(2.9 mm)	(2.9 mm)	(5.2 mm)	(4.3 mm)
	PT max. (NC) ✱2	2.8 mm	2.8 mm	4 mm	4 mm
	PT (NO) ✱1, ✱2	(1 mm)	(1 mm)	(1.5 mm)	(1.5 mm)
Overtravel	**OT min.**	4 mm	4 mm	5 mm	5 mm
Operating position	**OP**	18.2 ±0.5 mm	28.6 ±0.8 mm	37 ±0.8 mm	27 ±0.8 mm
	OP ✱2	17.4 ±0.5 mm	28 ±0.8 mm	36 ±0.8 mm	26.1 ±0.8 mm
Total travel	**TT ✱1**	(6 mm)	(6 mm)	(9 mm)	(9 mm)
Direct opening travel	**DOT min. ✱3**	3.2 mm	3.2 mm	5.8 mm	4.8 mm
Direct opening force	**DOF min. ✱3**	20 N	20 N	20 N	20 N

✱1. Reference values.
✱2. Only for MBB models. (D4N-□E□□ or D4N-□F□□)
✱3. For safe use, always make sure that the minimum values or greater are provided.

1-conduit Models

Adjustable Roller Lever, Form Lock (with Metal Lever, Resin Roller)
D4N-1□2G D4N-2□2G
D4N-4□2G D4N-9□2G ✻

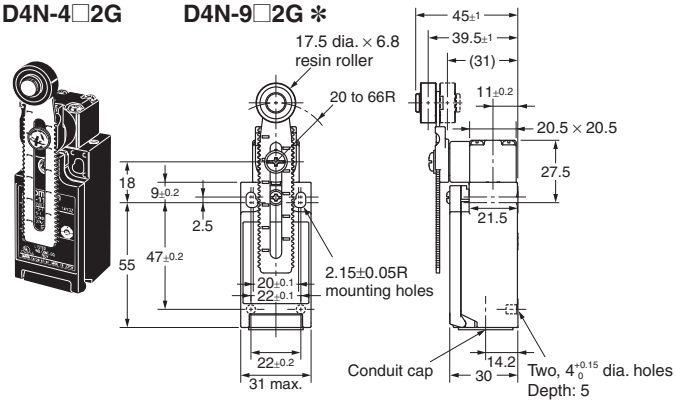

Adjustable Roller Lever, Form Lock (with Metal Lever, Rubber Roller)
D4N-1□2H D4N-2□2H
D4N-4□2H D4N-9□2H ✻

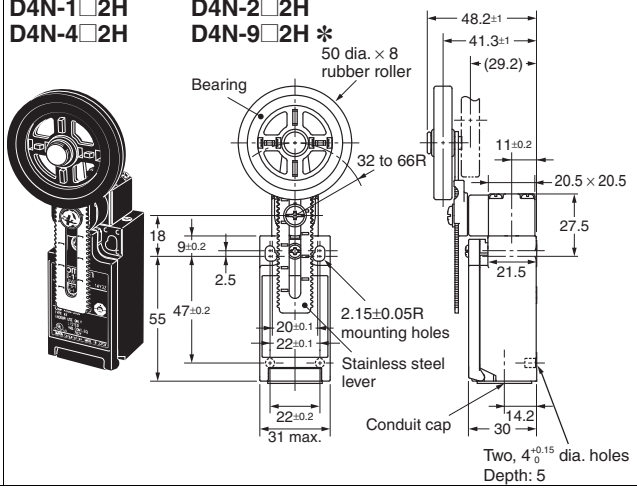

Note: Unless otherwise specified, a tolerance of ±0.4 mm applies to all dimensions.
✻ Refer to following diagrams for details on M12 connectors.

Snap-action (1NC/1NO) (2NC), Slow-action (2NC) (3NC)

Operating characteristics	Model	D4N-□12H D4N-□22H D4N-□B2H D4N-□D2H	D4N-□12G D4N-□22G D4N-□B2G D4N-□D2G ✻1
Operating force	**OF max.**	4.5 N	
Release force	**RF min.**	0.4 N	
Pretravel	**PT**	18° to 27°	
Overtravel	**OT min.**	40°	
Movement differential	**MD max. ✻2**	14°	
Operating position	**OP**	---	
Total travel	**TT ✻3**	(80°)	
Direct opening travel	**DOT min. ✻4**	50°	
Direct opening force	**DOF min. ✻4**	20 N	

Note: Variation occurs in the simultaneity of contact opening/closing operations of 2NC, 2NC/1NO, and 3NC contacts. Check contact operation.
✻1. The operating characteristics of these Switches were measured with the roller lever set at 32 mm.
✻2. Only for snap-action models.
✻3. Reference value.
✻4. For safe use, always make sure that the minimum values or greater are provided.

Slow-action (1NC/1NO) (2NC/1NO)

Operating characteristics	Model	D4N-□A2H D4N-□C2H D4N-□E2H D4N-□F2H	D4N-□A2G D4N-□C2G D4N-□E2G D4N-□F2G ✻1
Operating force	**OF max.**	4.5 N	
Release force	**RF min.**	0.4 N	
Pretravel	**PT (NC)**	18° to 27°	
	PT (NO) ✻2	(44°)	
	PT (NC) ✻3	27.5° to 36.5°	
	PT (NO) ✻2, ✻3	(18°)	
Overtravel	**OT min.**	40°	
Operating position	**OP**	---	
Total travel	**TT ✻2**	(80°)	
Direct opening travel	**DOT min.**	50°	
Direct opening force	**DOF min. ✻4**	20 N	

✻1. The operating characteristics of these Switches were measured with the roller lever set at 32 mm.
✻2. Reference values.
✻3. Only for MBB models. (D4N-□E□□ or D4N-□F□□)
✻4. For safe use, always make sure that the minimum values or greater are provided.

1-conduit M12 Connector
D4N-9□□□

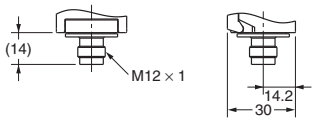

1-conduit Models

Fork Lever Lock (Right Operation) ✻2
D4N-2□RE
D4N-4□RE

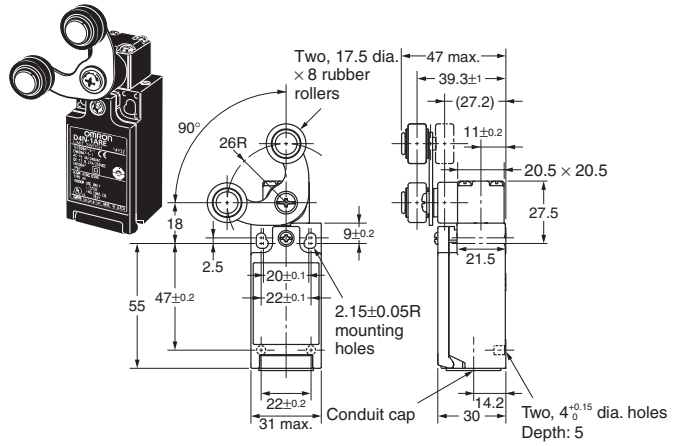

Fork Lever Lock (Left Operation) ✻2
D4N-2□LE
D4N-4□LE

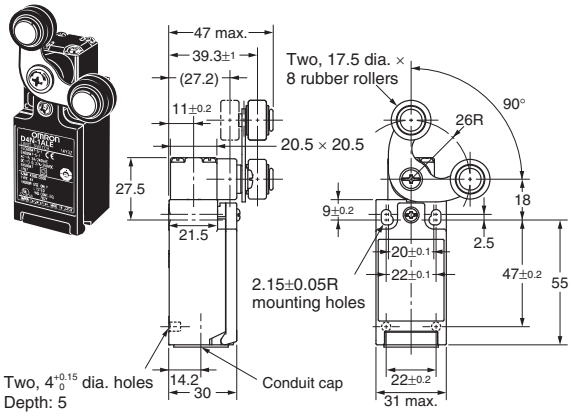

Cat Whisker ✻2
D4N-2□80
D4N-4□80

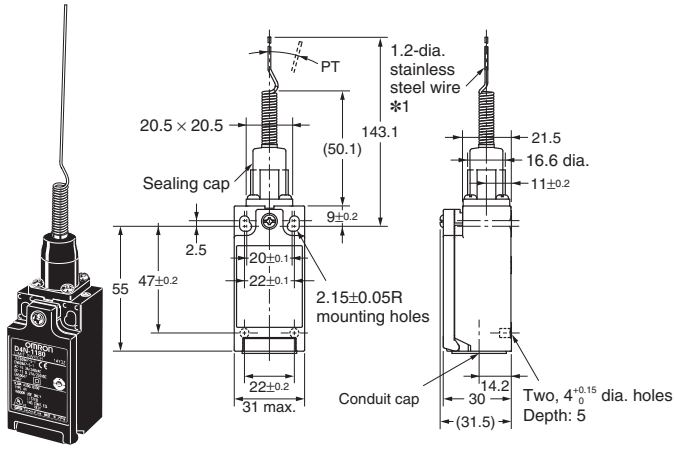

Plastic Rod ✻2
D4N-2□87
D4N-4□87

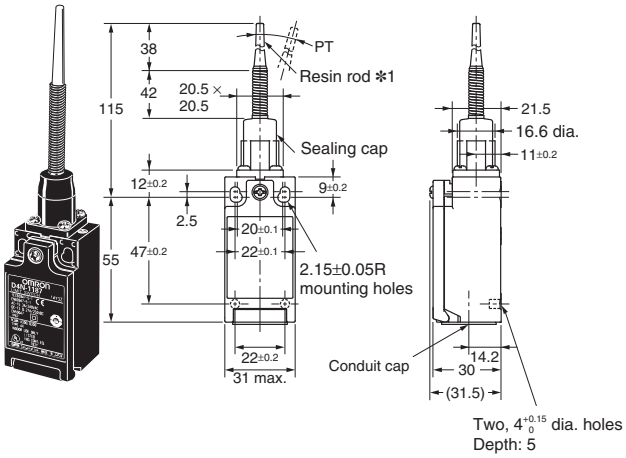

Note: Unless otherwise specified, a tolerance of ±0.4 mm applies to all dimensions.
✻1. The usable range for stainless steel wires and resin rods is 35 mm max. from the end with a total travel of 70 mm max.
✻2. In terms of construction, the Switch is a General-purpose Limit Switch rather than a Safety Limit Switch.

Slow-action (1NC/1NO) (2NC/1NO) (2NC) (3NC)

Operating characteristics / Model	D4N-□□RE	D4N-□□LE
Force necessary to reverse the direction of the lever: max.	6.4 N	6.4 N
Movement until the lever reverses	55 ±10°	55 ±10°
Movement until switch operation (NC)	(6.5°) (MBB: 10°)	(6.5°) (MBB: 10°)
Movement until switch operation (NO)	(18.5°) (MBB: 5°)	(18.5°) (MBB: 5°)

Note: Variation occurs in the simultaneity of contact opening/closing operations of 2NC, 2NC/1NO, and 3NC contacts. Check contact operation.

Snap-action (1NC/1NO) (2NC), Slow-action (2NC) (3NC)

Operating characteristics / Model		D4N-□□80	D4N-□□87
Operating force	OF max.	1.5 N	1.5 N
Pretravel	PT max.	15°	15°

2-conduit Models

Roller Lever (Resin Lever, Resin Roller)
D4N-6□20
D4N-8□20

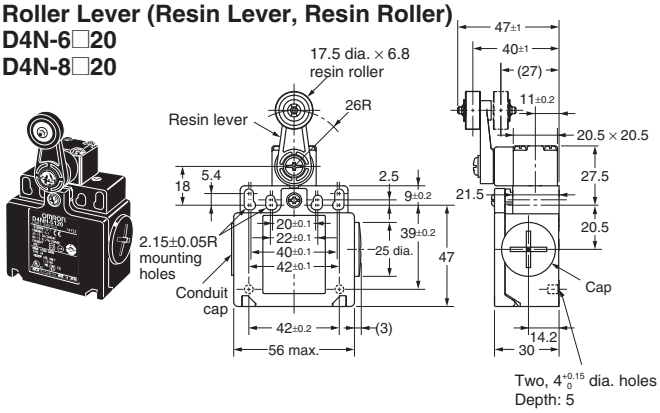

Roller Lever (Metal Lever, Resin Roller)
D4N-6□22
D4N-8□22

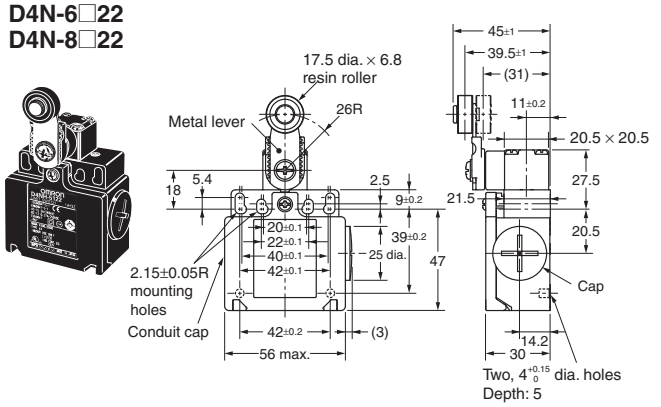

Plunger
D4N-6□31
D4N-8□31

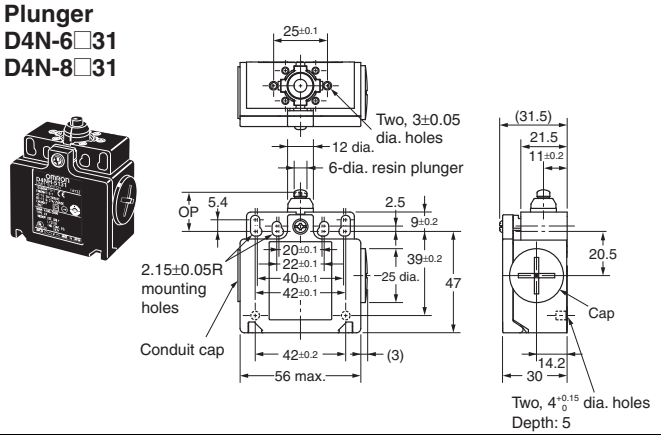

Roller Plunger
D4N-6□32
D4N-8□32

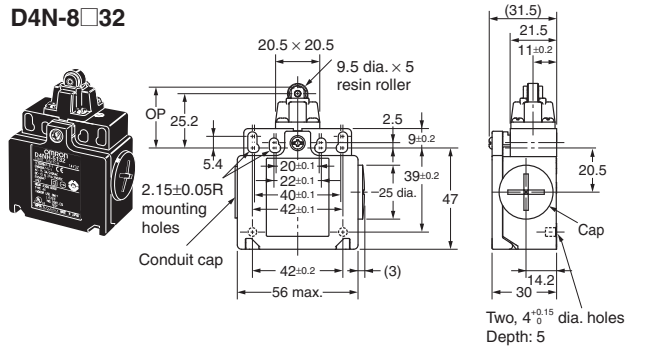

Note: Unless otherwise specified, a tolerance of ±0.4 mm applies to all dimensions.

Snap-action (1NC/1NO) (2NC), Slow-action (2NC) (3NC)

Operating characteristics	Model	D4N-□120 D4N-□220 D4N-□B20 D4N-□D20	D4N-□122 D4N-□222 D4N-□B22 D4N-□D22	D4N-□131 D4N-□231 D4N-□B31 D4N-□D31	D4N-□132 D4N-□232 D4N-□B32 D4N-□D32
Operating force	OF max.	5 N	5 N	6.5 N	6.5 N
Release force	RF min.	0.5 N	0.5 N	1.5 N	1.5 N
Pretravel	PT	18° to 27°	18° to 27°	2 mm	2 mm
Overtravel	OT min.	40°	40°	4 mm	4 mm
Movement differential	MD max. ✻1	14°	14°	1 mm	1 mm
Operating position	OP	---	---	18 ±0.5 mm	28.2 ±0.8 mm
Total travel	TT ✻2	(80°)	(80°)	(6 mm)	(6 mm)
Direct opening travel	DOT min. ✻3	50°	50°	3.2 mm	3.2 mm
Direct opening force	DOF min. ✻3	20 N	20 N	20 N	20 N

Note: Variation occurs in the simultaneity of contact opening/closing operations of 2NC, 2NC/1NO, and 3NC contacts. Check contact operation.

✻**1.** Only for snap-action models.
✻**2.** Reference value.
✻**3.** For safe use, always make sure that the minimum values or greater are provided.

Slow-action (1NC/1NO) (2NC/1NO)

Operating characteristics	Model	D4N-□A20 D4N-□C20 D4N-□E20 D4N-□F20	D4N-□A22 D4N-□C22 D4N-□E22 D4N-□F22	D4N-□A31 D4N-□C31 D4N-□E31 D4N-□F31	D4N-□A32 D4N-□C32 D4N-□E32 D4N-□F32
Operating force	OF max.	5 N	5 N	6.5 N	6.5 N
Release force	RF min.	0.5 N	0.5 N	1.5 N	1.5 N
Pretravel	PT (NC)	18° to 27°	18° to 27°	2 mm	2 mm
	PT (NO) ✻1	(44°)	(44°)	(2.9 mm)	(2.9 mm)
	PT (NC) ✻2	27.5° to 36.5°	27.5° to 36.5°	2.8 mm	2.8 mm
	PT (NO) ✻1, ✻2	(18°)	(18°)	(1 mm)	(1 mm)
Overtravel	OT min.	40°	40°	4 mm	4 mm
Operating position	OP	---	---	18 ±0.5 mm	28.2 ±0.8 mm
	OP ✻2	---	---	17.4 ±0.5 mm	28 ±0.8 mm
Total travel	TT ✻1	(80°)	(80°)	(6 mm)	(6 mm)
Direct opening travel	DOT min. ✻3	50°	50°	3.2 mm	3.2 mm
Direct opening force	DOF min. ✻3	20 N	20 N	20 N	20 N

✻**1.** Reference values.
✻**2.** Only for MBB models. (D4N-□E□□ or D4N-□F□□)
✻**3.** For safe use, always make sure that the minimum values or greater are provided.

2-conduit Models

One-way Roller Arm Lever (Horizontal)
D4N-6□62
D4N-8□62

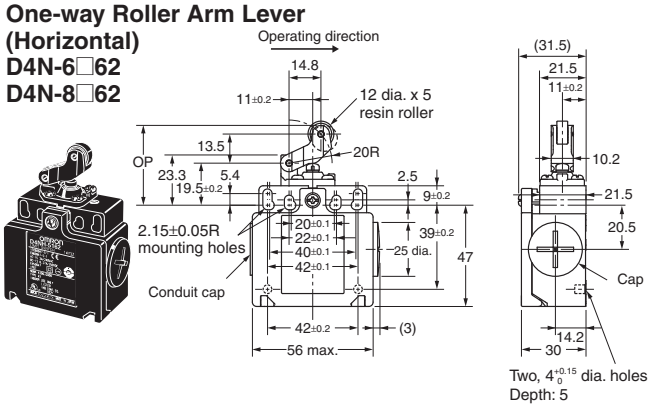

One-way Roller Arm Lever (Vertical)
D4N-6□72
D4N-8□72

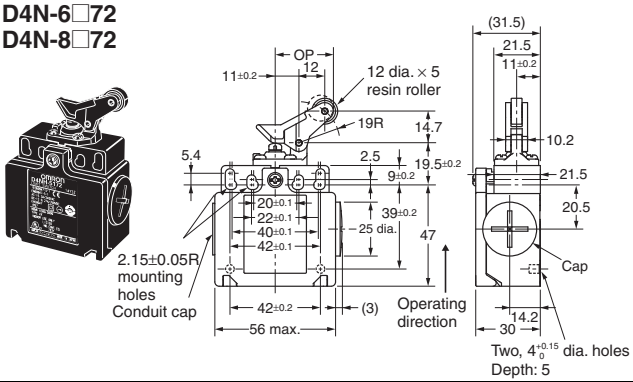

Adjustable Roller Lever, Form Lock (with Metal Lever, Resin Roller)
D4N-6□2G
D4N-8□2G

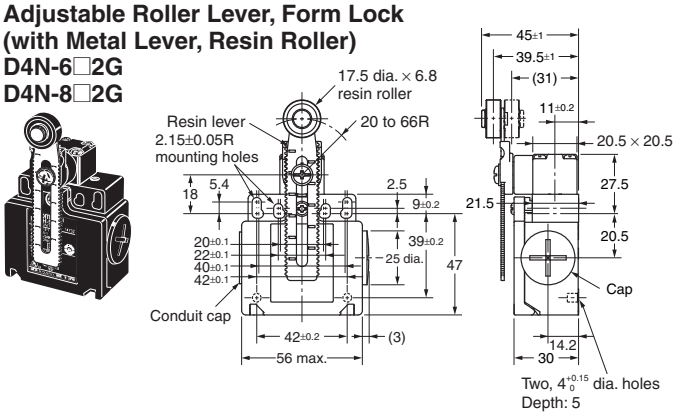

Adjustable Roller Lever, Form Lock (with Metal Lever, Rubber Roller)
D4N-6□2H
D4N-8□2H

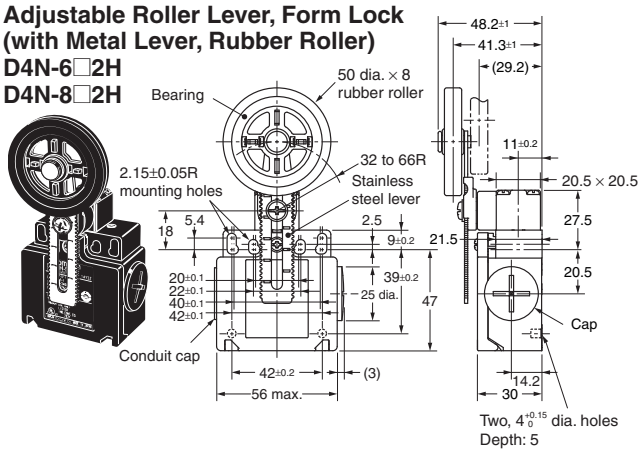

Note: Unless otherwise specified, a tolerance of ±0.4 mm applies to all dimensions.

Snap-action (1NC/1NO) (2NC), Slow-action (2NC) (3NC)

Operating characteristics	Model	D4N-□162 D4N-□262 D4N-□B62 D4N-□D62	D4N-□172 D4N-□272 D4N-□B72 D4N-□D72	D4N-□12G D4N-□22G D4N-□B2G D4N-□D2G ✻1	D4N-□12H D4N-□22H D4N-□B2H D4N-□D2H ✻2
Operating force	OF max.	5.0 N	5.0 N	4.5 N	4.5 N
Release force	RF min.	0.8 N	0.8 N	0.4 N	0.4 N
Pretravel	PT max.	4 mm	4 mm	18° to 27°	18° to 27°
Overtravel	OT min.	5 mm	5 mm	40°	40°
Movement differential	MD max. ✻3	1.5 mm	1.5 mm	14°	14°
Operating position	OP	37 ±0.8 mm	27 ±0.8 mm	---	---
Total travel	TT ✻4	(9 mm)	(9 mm)	(70°)	(70°)
Direct opening travel	DOT min. ✻5	5.8 mm	4.8 mm	50°	50°
Direct opening force	DOF min. ✻5	20 N	20 N	20 N	20 N

Note: Variation occurs in the simultaneity of contact opening/closing operations of 2NC, 2NC/1NO, and 3NC contacts. Check contact operation.

✻1. The operating characteristics of these Switches were measured with the roller lever set at 30 mm.
✻2. The operating characteristics of these Switches were measured with the roller lever set at 31 mm.
✻3. Only for snap-action models.
✻4. Reference value.
✻5. For safe use, always make sure that the minimum values or greater are provided.

Slow-action (1NC/1NO) (2NC/1NO)

Operating characteristics	Model	D4N-□A62 D4N-□C62 D4N-□E62 D4N-□F62	D4N-□A72 D4N-□C72 D4N-□E72 D4N-□F72	D4N-□A2G D4N-□C2G D4N-□E2G D4N-□F2G ✻1	D4N-□A2H D4N-□C2H D4N-□E2H D4N-□F2H ✻2
Operating force	OF max.	5.0 N	5.0 N	4.5 N	4.5 N
Release force	RF min.	0.8 N	0.8 N	0.4 N	0.4 N
Pretravel	PT max. (NC)	4 mm	4 mm	18° to 27°	18° to 27°
	PT (NO) ✻3	(5.2 mm)	(4.3 mm)	(44°)	(44°)
	PT max. (NC) ✻4	4 mm	4 mm	27.5° to 36.5°	27.5° to 36.5°
	PT (NO) ✻3, 4	(1.5 mm)	(1.5 mm)	(18°)	(18°)
Overtravel	OT min.	5 mm	5 mm	40°	40°
Operating position	OP	37 ±0.8 mm	27 ±0.8 mm	---	---
	OP ✻4	36 ±0.8 mm	26.1 ±0.8 mm	---	---
Total travel	TT ✻3	(9 mm)	(9 mm)	(70°)	(70°)
Direct opening travel	DOT min. ✻5	5.8 mm	4.8 mm	50°	50°
Direct opening force	DOF min. ✻5	20 N	20 N	20 N	20 N

✻1. The operating characteristics of these Switches were measured with the roller lever set at 30 mm.
✻2. The operating characteristics of these Switches were measured with the roller lever set at 31 mm.
✻3. Reference values.
✻4. Only for MBB models. (D4N-□E□□ or D4N-□F□□)
✻5. For safe use, always make sure that the minimum values or greater are provided.

Levers

Refer to the following for the angles and positions of the watchdogs (source: EN50047.)

Roller Lever (D4N-□□20)

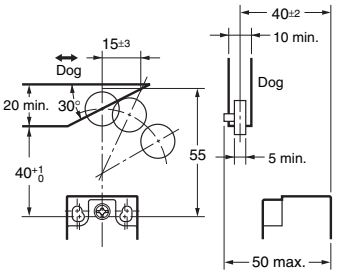

Adjustable Roller Lever, Form Lock (with Metal Lever, Resin Roller) (D4N-□□2G) (Reference Values)

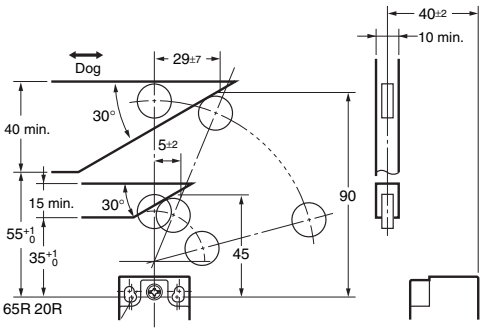

Adjustable Roller Lever, Form Lock (with Metal Lever, Rubber Roller) (D4N-□□2H) (Reference Values)

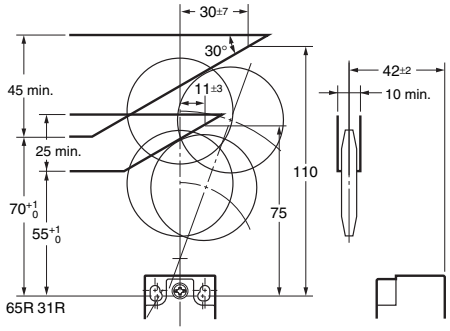

Sealed Plunger (D4N-□□31)

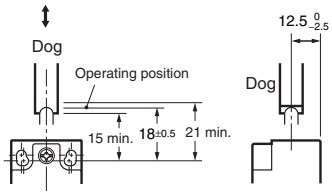

Roller Plunger (D4N-□□32)

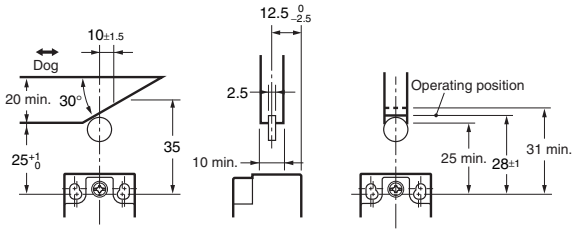

One-way Roller Arm Lever (Horizontal) (D4N-□□62)

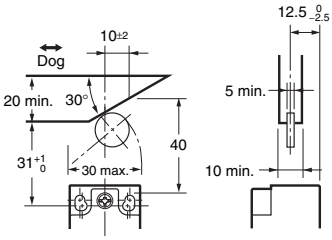

One-way Roller Arm Lever (Vertical) (Reference Values) (D4N-□□72)

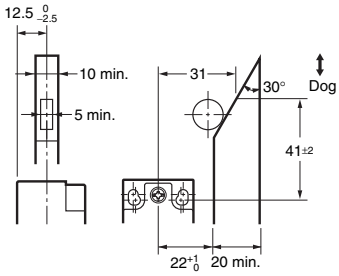

Fork Lever Lock (Right Operation) (D4N-□□RE)

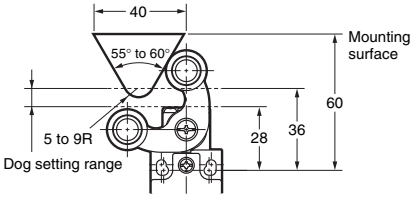

Fork Lever Lock (Left Operation) (D4N-□□LE)

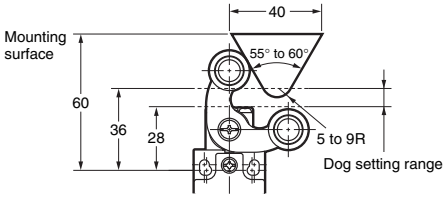

Note: Unless otherwise specified, a tolerance of ±0.4 mm applies to all dimensions.

Safety Precautions

● **Be sure to read the precautions for all D4N models in the website at: http://www.ia.omron.com/.**

⚠ CAUTION

Electric shock may occasionally occur.
Do not use metal connectors or metal conduits.

Precautions for Safe Use

- Do not use the Switch submerged in oil or water, or in locations continuously subject to splashes of oil or water. Doing so may result in oil or water entering the Switch interior. (The IP67 degree of protection specification for the Switch refers to water penetration while the Switch is submersed in water for a specified period of time.)
- Always attach the cover after completing wiring and before using the Switch. Also, do not turn ON the Switch with the cover open. Doing so may result in electric shock.
- Do not switch circuits for two or more standard loads (250 VAC, 3 A). Doing so may adversely affect insulation performance.

Precautions for Correct Use

The Switch contacts can be used with either standard loads or microloads. Once the contacts have been used to switch a load, however, they cannot be used to switch smaller loads. The contact surfaces will become rough once they have been used and contact reliability for smaller loads may be reduced.

Mounting Method

Appropriate Tightening Torque

Tighten each of the screws to the specified torque. Loose screws may result in malfunction of the Switch within a short time.

1	**Terminal screw**	0.6 to 0.8 N·m
2	**Cover mounting screw**	0.5 to 0.7 N·m
3	**Head mounting screw**	0.5 to 0.6 N·m
4	**Lever mounting screw**	1.6 to 1.8 N·m
5	**Body mounting screw**	0.5 to 0.7 N·m
6	**Connector, M12 adaptor**	1.8 to 2.2 N·m
7	**Cap screw**	1.3 to 1.7 N·m

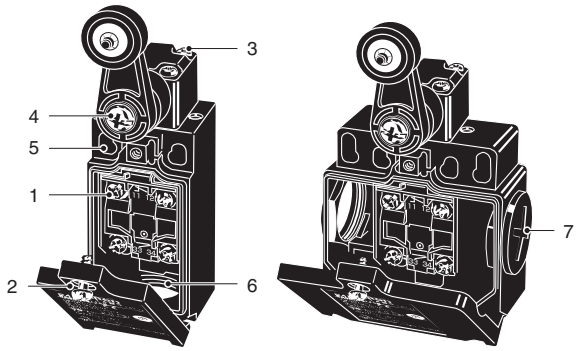

Switch Mounting

- Mount the Switch using M4 screws and spring washers and tighten the screws to the specified torque.
- For safety, use screws that cannot be easily removed, or use an equivalent measure to ensure that the Switch is secure.
- As shown below, two studs with a maximum height of 4.8 mm and a diameter of $4^{-0.05}_{-0.15}$ mm can be provided, the studs inserted into the holes on the bottom of the Switch, and the Switch secured at four locations to increase the mounting strength.

Switch Mounting Holes

One-conduit Type

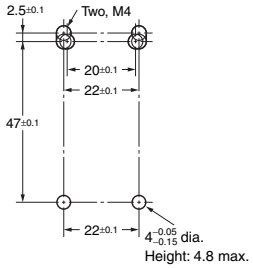

Two-conduit Type

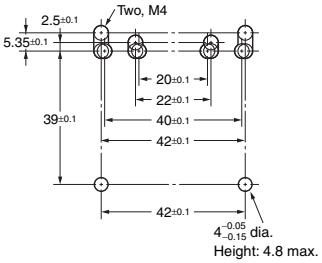

- Make sure that the dog contacts the actuator at a right angle. Applying a load to the switch actuator (roller) on a slant may result in deformation or damage of the actuator or rotary shaft.

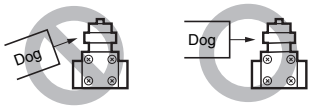

Incorrect **Correct**

Wiring

Wiring

- When connecting to the terminals via insulating tube and M3.5 crimp terminals, arrange the crimp terminals as shown below so that they do not rise up onto the case or the cover.
  Applicable lead wire size: AWG20 to AWG18 (0.5 to 0.75 mm^2).
  Use lead wires of an appropriate length, as shown below. Not doing so may result in excess length causing the cover to rise and not fit properly.

One-conduit Type (3 Poles)

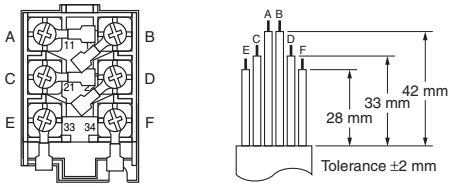

Two-conduit Type (3 Poles)

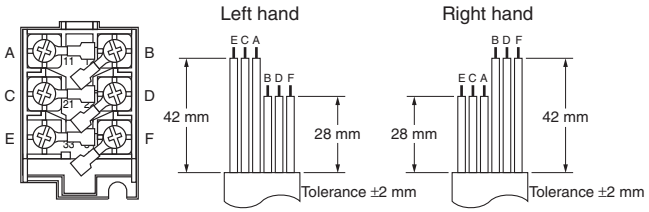

- Do not push crimp terminals into gaps in the case interior. Doing so may cause damage or deformation of the case.
- Use crimp terminals not more than 0.5 mm in thickness. Otherwise, they will interfere with other components inside the case.

[Reference] The crimp terminals shown below are not more than 0.5 mm thick.

Manufacturer	Type
J.S.T. Mfg. Co.	FN0.5-3.7 (F Type)
	N0.5-3.7 (Straight Type)

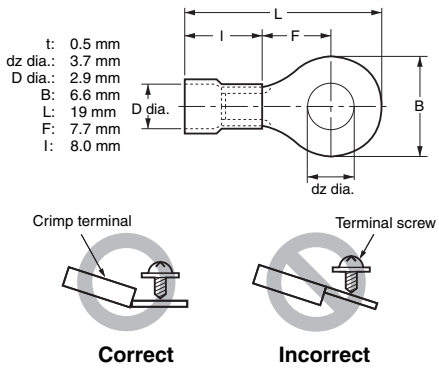

Contact Arrangement

- The contact arrangements are shown below.

Screw Terminal Type

D4N-□D□□ (3NC)

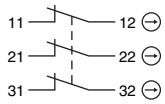

D4N-□C□□ (2NC/1NO)
D4N-□F□□ (2NC/1NO (MBB))

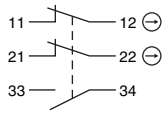

D4N-□B□□ (2NC)
D4N-□2□□ (2NC (SNAP))

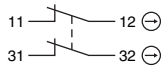

D4N-□A□□ (1NC/1NO)
D4N-□E□□ (1NC/1NO (MBB))

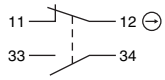

D4N-□1□□ (1NC/1NO (SNAP))

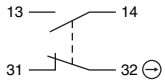

Connector Type

D4N-9B□□ (2NC)
D4N-92□□ (2NC (SNAP))

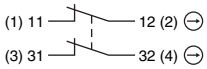

D4N-9A□□ (1NC/1NO)
D4N-9E□□ (1NC/1NO (MBB))

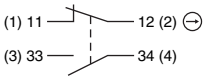

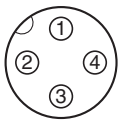

Pin No. (Terminal No.)

D4N-91□□ (1NC/1NO (SNAP))

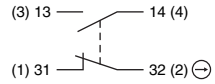

- Applicable socket: XS2F-D421 series (OMRON).
- Refer to the *Connector Catalog* for details on socket pin numbers and lead wire colors.

Socket Tightening (Connector Type)

- Turn the socket connector screws by hand and tighten until no space remains between the socket and the plug.
- Make sure that the socket connector is tightened securely. Otherwise, the rated degree of protection (IP67) may not be maintained and vibration may loosen the socket connector.

Conduit Opening

- Connect a recommended connector to the opening of the conduit and tighten the connector to the specified torque. The case may be damaged if an excessive tightening torque is applied.
- Use a cable with a suitable diameter for the connector.
- Attach and tighten a conduit cap to the unused conduit opening when wiring. Tighten the conduit cap to the specified torque. The conduit cap is provided with the Switch (2-conduit types).

Changing the Lever

The lever mounting screws can be used to set the lever position to any position in a 360° angle at 7.5° increments. Grooves are incised on the lever and rotary shaft that engage to prevent the lever from slipping against the rotary shaft. The screws on adjustable roller lever models can also loosened to change the length of the lever.
Remove the screws from the front of the lever before mounting the lever in reverse (front/back), and set the level so that operation will be completed before exceeding a range of 180° on the horizontal.

Recommended Connectors

Use connectors with screws not exceeding 9 mm, otherwise the screws will protrude into the case interior, interfering with other components in the case.
The connectors listed in the following table have connectors with thread sections not exceeding 9 mm.
Use the recommended connectors to ensure conformance to IP67.

Size	Manufacturer	Model	Applicable cable diameter
G1/2	LAPP	ST-PF1/2 5380-1002	6.0 to 12.0 mm
Pg13.5	LAPP	ST-13.5 5301-5030	6.0 to 12.0 mm
M20	LAPP	ST-M20 × 1.5 5311-1020	7.0 to 13.0 mm

Use LAPP connectors together with seal packing (JPK-16, GP-13.5, or GPM20), and tighten to the specified tightening torque. Seal packing is sold separately.

- LAPP is a German manufacturer.

Others

- When attaching a cover, be sure that the seal rubber is in place and that there is no foreign material present. If the cover is attached with the seal rubber out of place or if foreign material is stuck to the rubber, a proper seal will not be obtained.
- Do not use any screws to connect the cover other than the specified ones. The seal characteristics may be reduced.
- Make sure that foreign particles do not enter the head when removing the screws from the four corners to change the head position in any of the four directions.
- Use the following recommended countermeasures to prevent telegraphing when using adjustable or long levers.
  1. Make the rear edge of the dog smooth with an angle of 15° to 30° or make it in the shape of a quadratic curve.
  2. Design the circuit so that no error signal will be generated.

Read and Understand This Catalog

Please read and understand this catalog before purchasing the products. Please consult your OMRON representative if you have any questions or comments.

Warranty and Limitations of Liability

WARRANTY

OMRON's exclusive warranty is that the products are free from defects in materials and workmanship for a period of one year (or other period if specified) from date of sale by OMRON.

OMRON MAKES NO WARRANTY OR REPRESENTATION, EXPRESS OR IMPLIED, REGARDING NON-INFRINGEMENT, MERCHANTABILITY, OR FITNESS FOR PARTICULAR PURPOSE OF THE PRODUCTS. ANY BUYER OR USER ACKNOWLEDGES THAT THE BUYER OR USER ALONE HAS DETERMINED THAT THE PRODUCTS WILL SUITABLY MEET THE REQUIREMENTS OF THEIR INTENDED USE. OMRON DISCLAIMS ALL OTHER WARRANTIES, EXPRESS OR IMPLIED.

LIMITATIONS OF LIABILITY

OMRON SHALL NOT BE RESPONSIBLE FOR SPECIAL, INDIRECT, OR CONSEQUENTIAL DAMAGES, LOSS OF PROFITS OR COMMERCIAL LOSS IN ANY WAY CONNECTED WITH THE PRODUCTS, WHETHER SUCH CLAIM IS BASED ON CONTRACT, WARRANTY, NEGLIGENCE, OR STRICT LIABILITY.

In no event shall the responsibility of OMRON for any act exceed the individual price of the product on which liability is asserted.

IN NO EVENT SHALL OMRON BE RESPONSIBLE FOR WARRANTY, REPAIR, OR OTHER CLAIMS REGARDING THE PRODUCTS UNLESS OMRON'S ANALYSIS CONFIRMS THAT THE PRODUCTS WERE PROPERLY HANDLED, STORED, INSTALLED, AND MAINTAINED AND NOT SUBJECT TO CONTAMINATION, ABUSE, MISUSE, OR INAPPROPRIATE MODIFICATION OR REPAIR.

Application Considerations

SUITABILITY FOR USE

OMRON shall not be responsible for conformity with any standards, codes, or regulations that apply to the combination of products in the customer's application or use of the products.

At the customer's request, OMRON will provide applicable third party certification documents identifying ratings and limitations of use that apply to the products. This information by itself is not sufficient for a complete determination of the suitability of the products in combination with the end product, machine, system, or other application or use.

The following are some examples of applications for which particular attention must be given. This is not intended to be an exhaustive list of all possible uses of the products, nor is it intended to imply that the uses listed may be suitable for the products:

- Outdoor use, uses involving potential chemical contamination or electrical interference, or conditions or uses not described in this catalog.
- Nuclear energy control systems, combustion systems, railroad systems, aviation systems, medical equipment, amusement machines, vehicles, safety equipment, and installations subject to separate industry or government regulations.
- Systems, machines, and equipment that could present a risk to life or property.

Please know and observe all prohibitions of use applicable to the products.

NEVER USE THE PRODUCTS FOR AN APPLICATION INVOLVING SERIOUS RISK TO LIFE OR PROPERTY WITHOUT ENSURING THAT THE SYSTEM AS A WHOLE HAS BEEN DESIGNED TO ADDRESS THE RISKS, AND THAT THE OMRON PRODUCTS ARE PROPERLY RATED AND INSTALLED FOR THE INTENDED USE WITHIN THE OVERALL EQUIPMENT OR SYSTEM.

PROGRAMMABLE PRODUCTS

OMRON shall not be responsible for the user's programming of a programmable product, or any consequence thereof.

Disclaimers

CHANGE IN SPECIFICATIONS

Product specifications and accessories may be changed at any time based on improvements and other reasons.

It is our practice to change model numbers when published ratings or features are changed, or when significant construction changes are made. However, some specifications of the products may be changed without any notice. When in doubt, special model numbers may be assigned to fix or establish key specifications for your application on your request. Please consult with your OMRON representative at any time to confirm actual specifications of purchased products.

DIMENSIONS AND WEIGHTS

Dimensions and weights are nominal and are not to be used for manufacturing purposes, even when tolerances are shown.

PERFORMANCE DATA

Performance data given in this catalog is provided as a guide for the user in determining suitability and does not constitute a warranty. It may represent the result of OMRON's test conditions, and the users must correlate it to actual application requirements. Actual performance is subject to the OMRON Warranty and Limitations of Liability.

ERRORS AND OMISSIONS

The information in this document has been carefully checked and is believed to be accurate; however, no responsibility is assumed for clerical, typographical, or proofreading errors, or omissions.

2012.4

In the interest of product improvement, specifications are subject to change without notice.

OMRON Corporation
Industrial Automation Company

http://www.ia.omron.com/

(c)Copyright OMRON Corporation 2012 All Right Reserved.