OMRON

Safety Limit Switch

Small, Economical Switch Featuring a Positive Opening Mechanism and CE Marking

- Contacts opened by positive opening mechanism (NC contacts only)
- Double insulation makes ground terminal unnecessary (Bears ⧈ marking)
- Conforms to EN (TÜV) standards corresponding to the CE marking
- Wide standard operating temperature range: –30°C to 70°C
- Conforms to these standards and EC Directives:
  - Machinery Directive
  - Low Voltage Directive EN50047
  - EN1088 (slow-action models only)

Approved Standards

Snap-Action Models

Agency	Standard	File No.
TÜV Rheinland	EN60947-5-1	J9950233 (Positive opening: approved)
UL (see note1)	UL508 CSA C22.2 No. 14	E76675
BIA (see note2)	GS-ET-15	1-conduit type: 9407070 3-conduit type: 9601732

Note: 1. CSA C22.2 No. 14 compliance was verified and approved by UL (Marked with).
2. Except for variable roller lever, cat whisker, or plastic rod models.

Slow-Action Models

Agency	Standard	File No.
TÜV Rheinland	EN60947-5-1 EN81 EN115	R9451184 (Positive opening: approved)
UL (see note1)	UL508 CSA C22.2 No. 14	E76675
BIA (see note2)	GS-ET-15	1-conduit type: 9407070 2-conduit type: 9601732
SUVA (see note2)	SUVA	1-conduit type: E6192.d 2-conduit type: E6193.d

Note: 1. CSA C22.2 No. 14 compliance was verified and approved by UL (Marked with).
2. Except for variable roller lever, cat whisker, or plastic rod models.

Ordering Information

■ MODEL NUMBER LEGEND

D4D-□□□□N
1 2 3

1. Conduit
1: Pg13.5 (1-conduit) European type
2: G1/2 (1-conduit) Japanese type
3: 1/2-14NPT (1-conduit) North American type
5: Pg13.5 (2-conduit) European type
6: G1/2 (2-conduit) Japanese type

2. Built-in Switch
1: 1NC/1NO (Snap-action)
5: 1NC/1NO (Slow-action)
A: 2NC (Slow-action)

3. Head and Actuator
20: Roller lever (standard, resin lever)
21: Adjustable roller lever
22: Roller lever (metal lever)
27: Adjustable roller lever (with 50 dia. rubber roller)
31: Top plunger
32: Top roller plunger
62: One-way roller arm lever (horizontal)
72: One-way roller arm lever (vertical)
80: Cat whisker
87: Plastic rod
RE: Fork lever lock (right operation)
LE: Fork lever lock (left operation)

■ SWITCHES

Actuator	Conduit size/type		Built-in switch mechanism					
			1NC/1NO (Snap-action)		1NC/1NO (Slow-action)		2NC (Slow-action)	
			Positive opening	**Part number**	Positive opening	**Part number**	Positive opening	**Part number**
Roller lever (resin lever)	1-conduit	Pg13.5 (European)	⊖	**D4D-1120N**	⊖	**D4D-1520N**	⊖	**D4D-1A20N**
		G1/2 (Japanese)		**D4D-2120N**		**D4D-2520N**		**D4D-2A20N**
		1/2-14NPT (North American)		**D4D-3120N**		**D4D-3520N**		**D4D-3A20N**
	2-conduit	Pg13.5 (European)		**D4D-5120N**		**D4D-5520N**		**D4D-5A20N**
		G1/2 (Japanese)		**D4D-6120N**		**D4D-6520N**		**D4D-6A20N**
Roller lever (metal lever)	1-conduit	Pg13.5 (European)	⊖	**D4D-1122N**	⊖	**D4D-1522N**	⊖	**D4D-1A22N**
		G1/2 (Japanese)		**D4D-2122N**		**D4D-2522N**		**D4D-2A22N**
		1/2-14NPT (North American)		**D4D-3122N**		**D4D-3522N**		**D4D-3A22N**
	2-conduit	Pg13.5 (European)		**D4D-5122N**		**D4D-5522N**		**D4D-5A22N**
		G1/2 (Japanese)		**D4D-6122N**		**D4D-6522N**		**D4D-6A22N**
Adjustable roller lever	1-conduit	Pg13.5 (European)	---	**D4D-1121N**	⊖ (See Note 1)	**D4D-1521N**	⊖ (See Note 1)	**D4D-1A21N**
		G1/2 (Japanese)		**D4D-2121N**		**D4D-2521N**		**D4D-2A21N**
		1/2-14NPT (North American)		**D4D-3121N**		**D4D-3521N**		**D4D-3A21N**
	2-conduit	Pg13.5 (European)		**D4D-5121N**		**D4D-5521N**		**D4D-5A21N**
		G1/2 (Japanese)		**D4D-6121N**		**D4D-6521N**		**D4D-6A21N**
Adjustable roller lever (with rubber roller)	1-conduit	Pg13.5 (European)	⊖ (See Note 1)	**D4D-1127N**	⊖ (See Note 1)	**D4D-1527N**	⊖ (See Note 1)	**D4D-1A27N**
		G1/2 (Japanese)		**D4D-2127N**		**D4D-2527N**		**D4D-2A27N**
		1/2-14NPT (North American)		**D4D-3127N**		**D4D-3527N**		**D4D-3A27N**
	2-conduit	Pg13.5 (European)		**D4D-5127N**		**D4D-5527N**		**D4D-5A27N**
		G1/2 (Japanese)		**D4D-6127N**		**D4D-6527N**		**D4D-6A27N**

(This table continues on the next page.)

Note: 1. The Switches are marked with "⊖" indicating approval by TÜV Rheinland for the positive opening mechanism. Adjustable roller lever and fork lever lock models are approved by TÜV Rheinland for the positive opening mechanism, but not by the GS-ET-15 standard (BIA) nor by SUVA.
2. Right operation: Contact 11-12 is positively opened, when the lever on the right is lowered.
Left operation: Contact 11-12 is positively opened, when the lever on the left is lowered.

Ordering Information – continued from previous page

Actuator	Conduit size/type		Built-in switch mechanism					
			1NC/1NO (Snap-action)		1NC/1NO (Slow-action)		2NC (Slow-action)	
			Positive opening	**Part number**	Positive opening	**Part number**	Positive opening	**Part number**
Plunger	1-conduit	Pg13.5 (European)	⊖	**D4D-1131N**	⊖	**D4D-1531N**	⊖	**D4D-1A31N**
		G1/2 (Japanese)		**D4D-2131N**		**D4D-2531N**		**D4D-2A31N**
		1/2-14NPT (North American)		**D4D-3131N**		**D4D-3531N**		**D4D-3A31N**
	2-conduit	Pg13.5 (European)		**D4D-5131N**		**D4D-5531N**		**D4D-5A31N**
		G1/2 (Japanese)		**D4D-6131N**		**D4D-6531N**		**D4D-6A31N**
Roller plunger	1-conduit	Pg13.5 (European)	⊖	**D4D-1132N**	⊖	**D4D-1532N**	⊖	**D4D-1A32N**
		G1/2 (Japanese)		**D4D-2132N**		**D4D-2532N**		**D4D-2A32N**
		1/2-14NPT (North American)		**D4D-3132N**		**D4D-3532N**		**D4D-3A32N**
	2-conduit	Pg13.5 (European)		**D4D-5132N**		**D4D-5532N**		**D4D-5A32N**
		G1/2 (Japanese)		**D4D-6132N**		**D4D-6532N**		**D4D-6A32N**
One-way roller arm lever (horizontal)	1-conduit	Pg13.5 (European)	⊖	**D4D-1162N**	⊖	**D4D-1562N**	⊖	**D4D-1A62N**
		G1/2 (Japanese)		**D4D-2162N**		**D4D-2562N**		**D4D-2A62N**
		1/2-14NPT (North American)		**D4D-3162N**		**D4D-3562N**		**D4D-3A62N**
	2-conduit	Pg13.5 (European)		**D4D-5162N**		**D4D-5562N**		**D4D-5A62N**
		G1/2 (Japanese)		**D4D-6162N**		**D4D-6562N**		**D4D-6A62N**
One-way roller arm lever (vertical)	1-conduit	Pg13.5(European)	⊖	**D4D-1172N**	⊖	**D4D-1572N**	⊖	**D4D-1A72N**
		G1/2 (Japanese)		**D4D-2172N**		**D4D-2572N**		**D4D-2A72N**
		1/2-14NPT (North American)		**D4D-3172N**		**D4D-3572N**		**D4D-3A72N**
	2-conduit	Pg13.5 (European)		**D4D-5172N**		**D4D-5572N**		**D4D-5A72N**
		G1/2 (Japanese)		**D4D-6172N**		**D4D-6572N**		**D4D-6A72N**
Fork lever lock (right operation) (See Note 2)	1-conduit	Pg13.5 (European)	---	**---**	⊖ (See Note 1)	**D4D-15REN**	⊖ (See Note 1)	**D4D-1AREN**
		G1/2 (Japanese)				**D4D-25REN**		**D4D-2AREN**
		1/2-14NPT (North American)				**D4D-35REN**		**D4D-3AREN**
	2-conduit	Pg13.5 (European)				**D4D-55REN**		**D4D-5AREN**
		G1/2 (Japanese)				**D4D-65REN**		**D4D-6AREN**
Fork lever lock (left operation) (See Note 2)	1-conduit	Pg13.5 (European)	---	**---**	⊖ (See Note 1)	**D4D-15LEN**	⊖ (See Note 1)	**D4D-1ALEN**
		G1/2 (Japanese)				**D4D-25LEN**		**D4D-2ALEN**
		1/2-14NPT (North American)				**D4D-35LEN**		**D4D-3ALEN**
	2-conduit	Pg13.5 (European)				**D4D-55LEN**		**D4D-5ALEN**
		G1/2 (Japanese)				**D4D-65LEN**		**D4D-6ALEN**
Cat whisker	1-conduit	Pg13.5 (European)	---	**D4D-1180N**	---	**---**	---	**D4D-1A80N**
		G1/2 (Japanese)		**D4D-2180N**		**---**		**D4D-2A80N**
		1/2-14NPT (North American)		**D4D-3180N**		**---**		**D4D-3A80N**
	2-conduit	Pg13.5 (European)		**D4D-5180N**		**---**		**D4D-5A80N**
		G1/2 (Japanese)		**D4D-6180N**		**---**		**D4D-6A80N**
Plastic rod	1-conduit	Pg13.5 (European)	---	**D4D-1187N**	---	**---**	---	**D4D-1A87N**
		G1/2 (Japanese)		**D4D-2187N**		**---**		**D4D-2A87N**
		1/2-14NPT (North American)		**D4D-3187N**		**---**		**D4D-3A87N**
	2-conduit	Pg13.5 (European)		**D4D-5187N**		**---**		**D4D-5A87N**
		G1/2 (Japanese)		**D4D-6187N**		**---**		**D4D-6A87N**

Note: 1. The Switches are marked with "⊖" indicating approval by TÜV Rheinland for the positive opening mechanism. Adjustable roller lever and fork lever lock models are approved by TÜV Rheinland for the positive opening mechanism, but not by the GS-ET-15 standard (BIA) nor by SUVA.

2. Right operation: Contact 11-12 is positively opened, when the lever on the right is lowered.
Left operation: Contact 11-1 (Japanese) 2 is positively opened, when the lever on the left is lowered.

Specifications

■ APPROVED STANDARD RATINGS

TÜV (EN60947-5-1)

Utilization category	AC-15
Rated operating current (I_e)	2 A
Rated operating voltage (U_e)	400 V

Note: As protection against short-circuiting, use either a gI-type or gG-type 10-A fuse that conforms to IEC269.

UL/CSA (UL508/CSA C22.2 No. 14)
A600 (D4D-□5□□N, D4D-□A□□N)

Type	Rated voltage	Carry current	Current		Volt-amperes	
			Make	Break	Make	Break
Slow-action	120 VAC 240 VAC 480 VAC 600 VAC	10 A	60 A 30 A 15 A 7.5 A 12 A	6 A 3 A 1.5 A 1.2 A	7,200 VA	720 VA

B600 (D4D-□1□□N)

Type	Rated voltage	Carry current	Current		Volt-amperes	
			Make	Break	Make	Break
Snap-action	120 VAC 240 VAC 480 VAC 600 VAC	5 A	30 A 15 A 7.5 A 6 A	3 A 1.5 A 0.75 A 0.6 A	3,600 VA	360 VA

■ CHARACTERISTICS

Degree of protection	IP65 (EN60947-5-1)
Life expectancy (see note 2)	Mechanical: 15,000,000 operations min. (see note 3) Electrical: 150,000 operations min. (Refer to *Operating Characteristics* for snap-action.)
Operating speed	1 mm/s to 0.5 m/s (with D4D-1120N)
Contact gap	Snap-action: 2 x 0.5 mm min. Slow-action: 2 x 2 mm min.
Operating frequency	Mechanical: 120 operations/min min. Electrical: 30 operations/min min.
Rated frequency	50/60 Hz
Insulation resistance	100 MΩ min. (at 500 VDC) between terminals of the same polarity and between each terminal and non-current-carrying metal parts
Contact resistance	25 mΩ max. (initial value)
Dielectric strength	Snap-action Uimp 2.5 kV between terminals of the same polarity Uimp 4 kV between each terminal and non-current-carrying metal parts Slow-action U_{imp} 4 kV between terminals of the same polarity, between terminals of different polarity, and between each terminal and non-current-carrying metal parts
Rated insulation voltage (U_i)	400 V (EN60947-5-1)
Switching overvoltage	1,500 V max. (EN60947-5-1)
Pollution degree (operating environment)	3 (EN60947-5-1)
Conditional short-circuit current	100 A (EN60947-5-1)
Conventional enclosed thermal current (I_{the})	10 A (EN60947-5-1)
Protection against electric shock	Class II (double insulation)
Vibration resistance	Malfunction: 10 to 55 Hz, 0.75-mm single amplitude
Shock resistance	Destruction: 1,000 m/s^2 min. Malfunction: 300 m/s^2 min.
Ambient temperature	Operating: –30°C to 70°C (with no icing)
Ambient humidity	Operating: 95% max.
Weight	Approx. 70 g (for D4D-1120N) Approx. 86 g (for D4D-5120N)

Note: 1. The above figures are initial values.
2. Life expectancy values are calculated at an operating temperature of 5 to 35°C, and an operating humidity of 40 to 70%. Contact your OMRON sales representative for more detailed information on other operating environments.
3. The mechanical life expectancy of the fork lever lock model is 10,000,000 operations min.

■ OPERATING CHARACTERISTICS

Snap-Action (1NC/1NO), Slow-Action (2NC)

1-Conduit and 2-Conduit Models

Model	D4D-□120N D4D-□A20N	D4D-□121N D4D-□A21N (see note 1)	D4D-□122N D4D-□A22N	D4D-□127N D4D-□A27N (see note 2)	D4D-□131N D4D-□A31N	D4D-□132N D4D-□A32N	D4D-□162N D4D-□A62N	D4D-□172N D4D-□A72N	D4D-□180N D4D-□A80N	D4D-□187N D4D-□A87N
OF max.	4.90 N	4.22 N	4.90 N	4.22 N	6.37 N		3.92 N	4.41 N	1.47 N	
RF min.	0.49 N	0.42 N	0.49 N	0.42 N	1.47 N		0.78 N	0.88 N	---	
PT	18° to 27°				2 mm max.		4 mm max.		15° max.	
OT min.	40°				4 mm		5 mm		---	
MD max. (see note 3)	14°				1 mm	1 mm	1.5 mm		---	
OP	---				18.2±0.5 mm	28.2± 0.8 mm	37±0.8 mm	27±0.8 mm	---	
TT (see note 4)	70°				6 mm		9 mm		---	
POT min. (see note 5)	50°				3.2 mm		5.8 mm	4.8 mm	---	
POF min. (see note 5)	19.61 N				19.61 N				---	

Note: 1. The operating characteristics of these Switches were measured with the roller lever set at 30 mm
2. The operating characteristics of these Switches were measured with the roller lever set at 31 mm.
3. Only for snap-action models.
4. Nominal value.
5. Only for slow-action models. POT (positive opening travel) and POF (positive opening force) are required values for positive opening.

Slow-Action (1NC/1NO)

1-Conduit and 2-Conduit Models

Model	D4D-□520N	D4D-□521N (see note 1)	D4D-□522N	D4D-□527N (see note 2)	D4D-□531N	D4D-□532N	D4D-□562N	D4D-□572N
OF max.	4.90 N	4.22 N	4.90 N	4.22 N	6.37 N		3.92 N	4.41 N
RF min.	0.49 N	0.42 N	0.49 N	0.42 N	1.47 N		0.78 N	0.88 N
PT (see note 3)	18° to 27°				2 mm max.		4 mm max.	
PT (2nd) (see note 4)	(44°)				(2.9 mm)		(5.2 mm)	(4.3 mm)
OT min.	40°				4 mm		5 mm	
OP	---				18±0.5 mm	28.2±0.8 mm	37±0.8 mm	27±0.8 mm
TT (see note 5)	70°				6 mm		(9 mm)	
POT min. (see note 6)	50°				3.2 mm		5.8 mm	4.8 mm
POF min. (see note 6)	19.61 N				19.61 N			

Note: 1. The operating characteristics of these Switches were measured with the roller lever set at 30 mm.
2. The operating characteristics of these Switches were measured with the roller lever set at 31 mm.
3. Measured with NC side in the OFF state.
4. PT (2nd) is the distance required before NO contact occurs.
PT (2nd) is the reference value.
5. Nominal value.
6. POT (positive opening travel) and POF (positive opening force) are required values for positive opening.

Slow-Action (1NC/1NO), Slow-Action (2NC)

1-Conduit and 2-conduit Models

Model	D4D-□□REN	D4D-□□LEN
Force necessary to reverse the direction of the lever: max.	6.37 N	
Movement until the lever reverses	45° to 65°	
Movement until switch operation (NC)	(6.5°)	
Movement until switch operation (NO)	(18.5°)	
POT min.	30°	
POF min.	19.61 N	

Note: POT (positive opening travel) and POF (positive opening force) are required values for positive opening.

Engineering Data

■ ELECTRICAL LIFE EXPECTANCY (1NC/1NO CONTACT, SNAP-ACTION)

(cosϕ = 1)

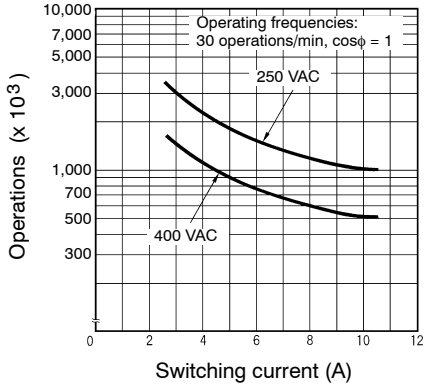

(cosϕ = 0.4)

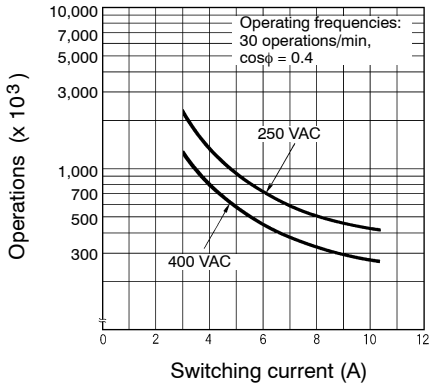

Nomenclature

Head

With roller lever models, the direction of the switch head can be varied to any of the four directions by loosening the roller lever switch screws at the four corners of the head.

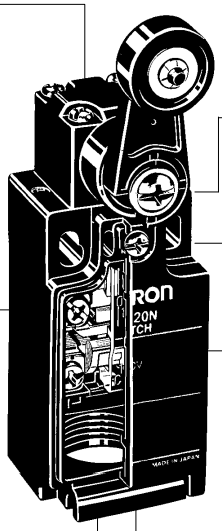

Safety-Oriented Lever Setting

Grooves which engage the lever every 90° are cut in the operation indicator disk to prevent the lever from slipping against the rotary shaft.
There are resin-lever and metal-lever types.

Cover

Easy to open and wire. (One mounting screw and opposite side is for hinge mounting.)

Built-in Switch

Wide switch variations.
Snap-action: 1NC/1NO
Slow-action: 1NC/1NO
2NC

Contact Material

Ag alloy

Conduit Opening

Available in two different types of conduit threads:
Pg 13.5: European standard (1-conduit, 2-conduit)
G 1/2: Japanese standard (1-conduit, 2-conduit)
1/2-14NPT: US standard (1-conduit)

Conduit Cap

Can be used as a simple connector under good environmental conditions.

Operation

■ CONTACT FORM (EN60947-5-1,EN50013)

Model	Contact		Diagrams (see note)	Remarks
D4D-□1□N	1NC/1NO (snap-action)	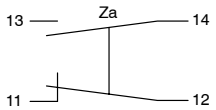	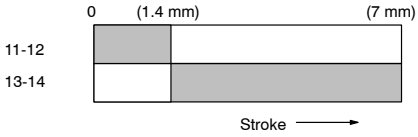	Only NC contact 11-12 has an approved positive opening mechanism. Terminals 11-12 and 13-14 cannot be used as unlike poles.
D4D-□5□N	1NC/1NO (slow-action)	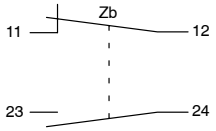	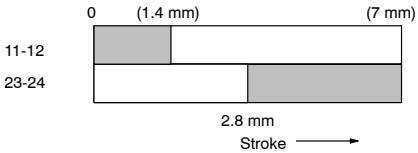	Only NC contact 11-12 has an approved positive opening mechanism. Terminals 11-12 and 23-24 can be used as unlike poles.
D4D-□A□N	2NC (slow-action)	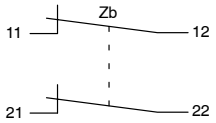	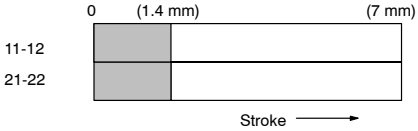	NC contacts 11-12 and 23-24 have an approved positive opening mechanism. Terminals 11-12 and 21-22 can be used as unlike poles.

Note: 1. Contact operation

Closed Open

2. Terminals are numbered according to EN50013. Contact forms are according to EN60947-5-1.

■ POSITIVE OPENING MECHANISM

1NC/1NO Contact (Snap-Action)

Conforms to EN60947-5-1 Positive Opening

If metal deposition between mating contacts occurs on the NC contact side, they can be pulled apart by the shearing force and tensile force generated when part B of the safety cam or plunger engages part A of the movable contact blade. When the safety cam or plunger is moved in the direction of the black arrow, the Limit Switch releases.

1. When metal deposition occurs.

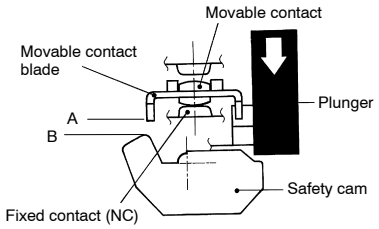

2. When contacts are being pulled apart.

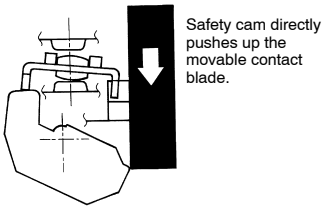

3. When contacts are completely pulled apart.

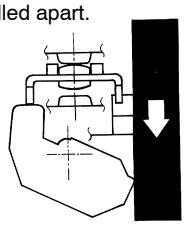

1NC/1NO Contact (Slow-Action)

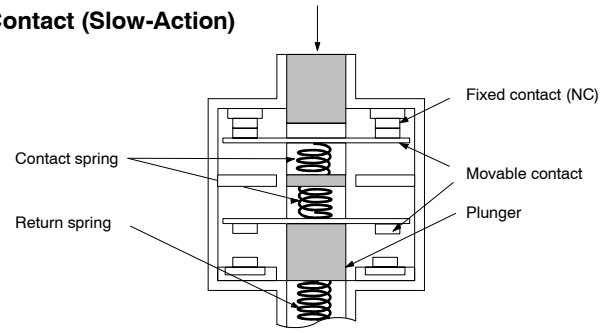

Conforms to EN60947-5-1 Positive Opening

When metal deposition occurs, the contacts are separated from each other by the plunger being pushed in.

2NC Contact (Slow-Action)

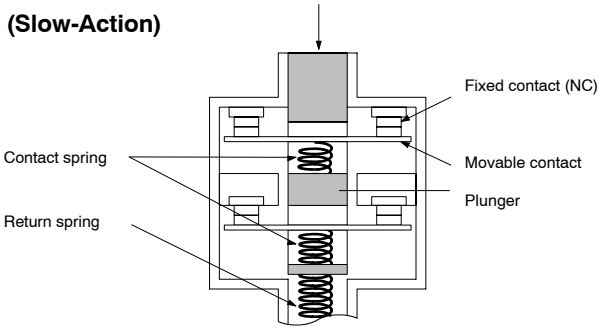

Conforms to EN60947-5-1 Positive Opening

When metal deposition occurs, the contacts are separated from each other by the plunger being pushed in.

Dimensions

Unit: mm

■ SWITCHES

1-Conduit Models

Note: 1. Unless otherwise specified, a tolerance of ±0.4 mm applies to all dimensions.
2. When placing your order, refer to the Model Number Legend in *Ordering Information* in order to correctly specify the conduit type. (The code number for the conduit type will fill the blank box within the model numbers shown below.)

Adjustable Roller Lever
D4D-□121N
D4D-□521N
D4D-□A21N

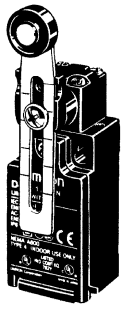

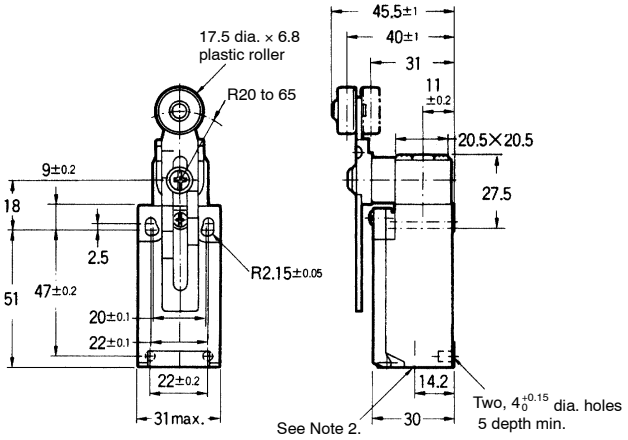

Roller Lever (Metal Lever)
D4D-□122N
D4D-□522N
D4D-□A22N

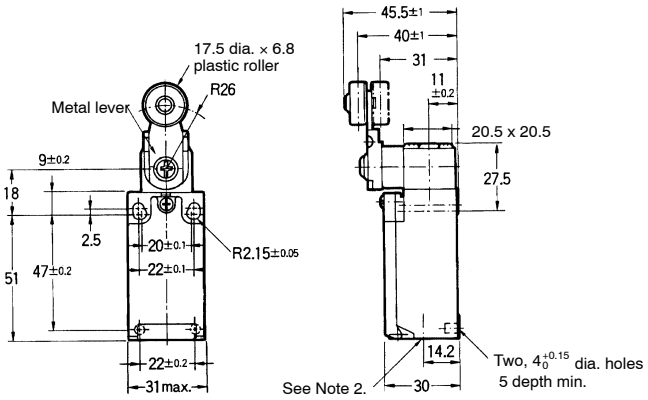

Adjustable Roller Lever
D4D-□121N
D4D-□521N
D4D-□A21N

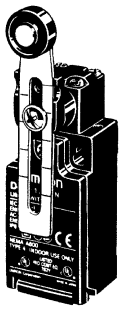

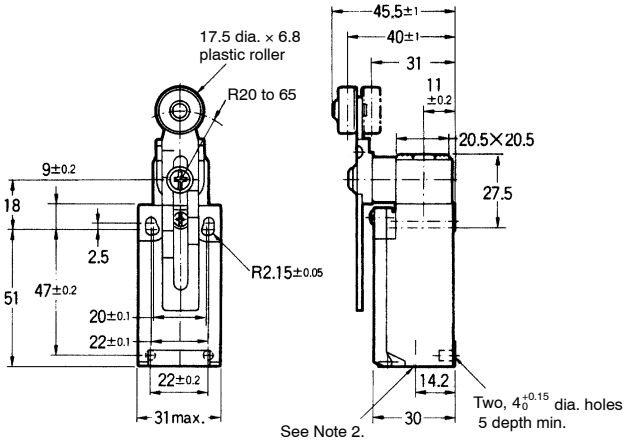

Adjustable Roller Lever (with Rubber Roller)
D4D-□127N
D4D-□527N
D4D-□A27N

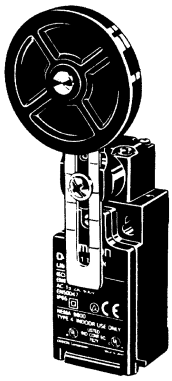

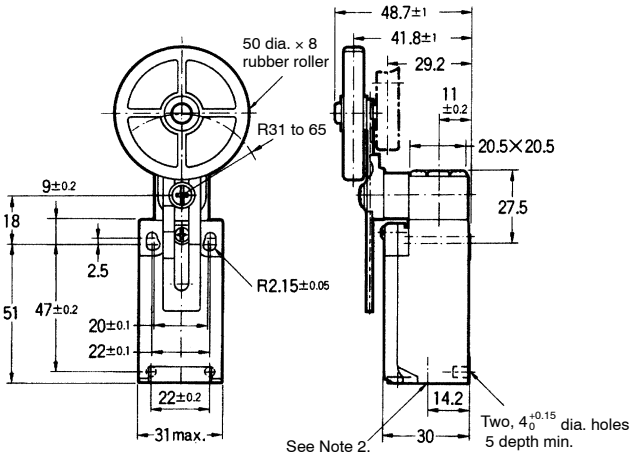

Plunger
D4D-□131N
D4D-□531N
D4D-□A31N

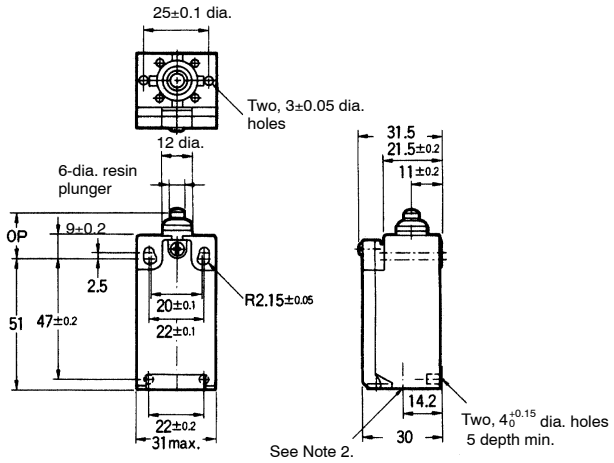

Roller Plunger
D4D-□132N
D4D-□532N
D4D-□A32N

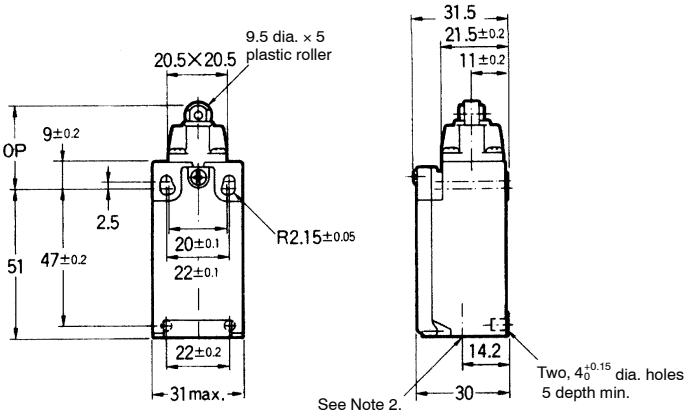

One-Way Roller Arm Lever (Horizontal)
D4D-□162N
D4D-□562N
D4D-□A62N

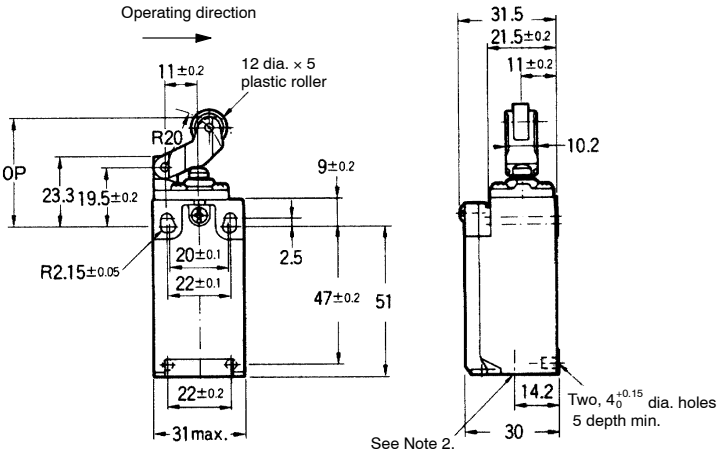

One-Way Roller Arm Lever (Vertical)
D4D-□172N
D4D-□572N
D4D-□A72N

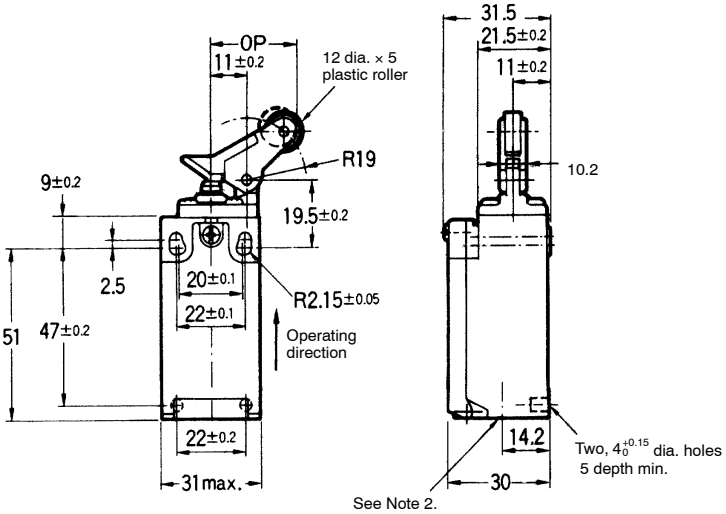

Fork Lever Lock (Right Operation)
D4D-15REN

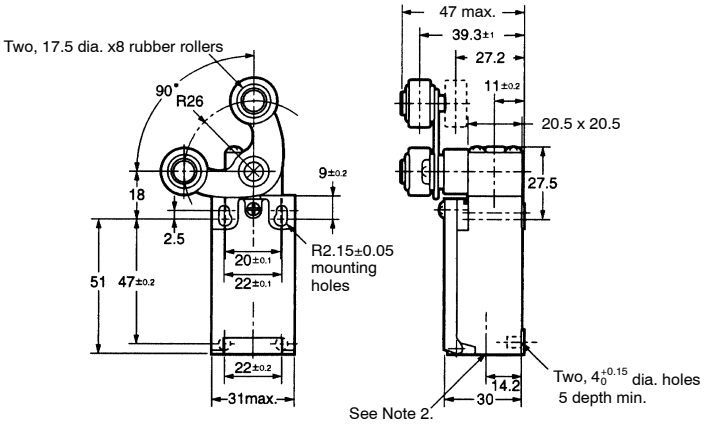

Fork Lever Lock (Left Operation) D4D-15LEN

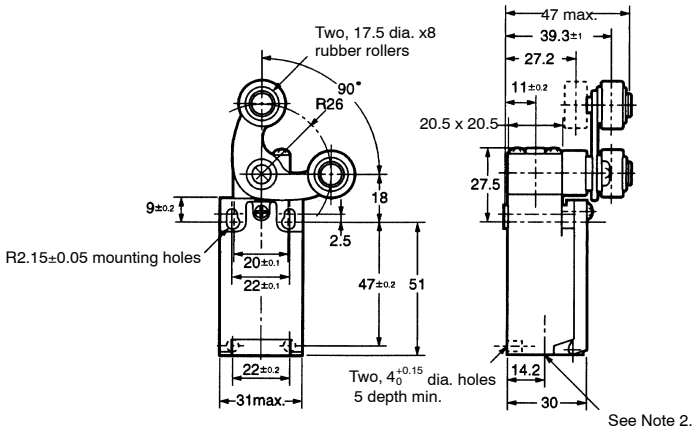

Cat Whisker D4D-□□80N

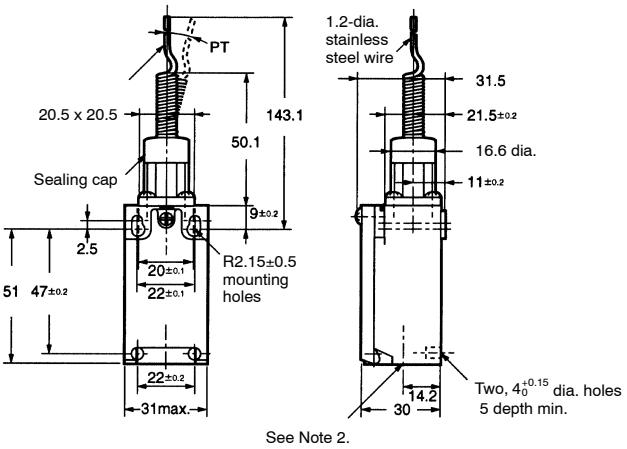

Plastic Rod D4D-□□87N

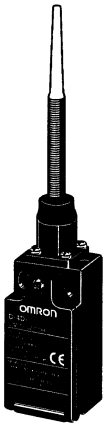

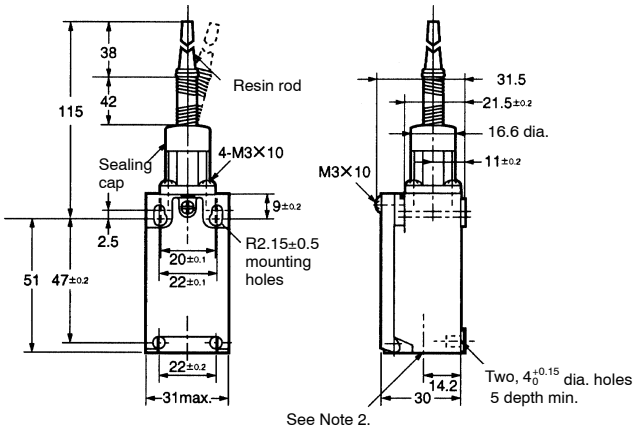

2-Conduit Models

Roller Lever (Resin Lever)
D4D-□120N
D4D-□520N
D4D-□A20N

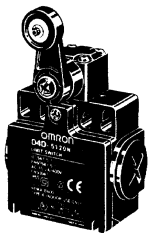

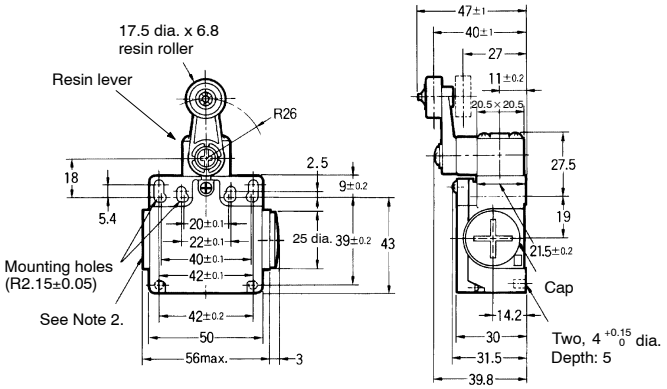

Roller Lever (Metal Lever)
D4D-□122N
D4D-□522N
D4D-□A22N

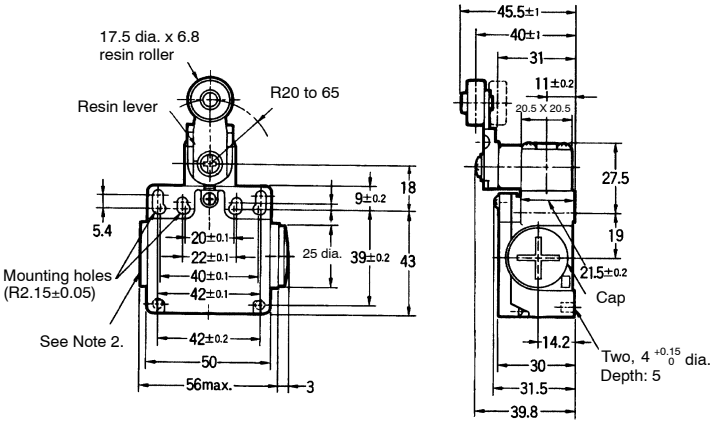

Adjustable Roller Lever
D4D-□121N
D4D-□521N
D4D-□A21N

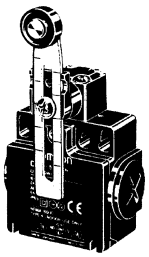

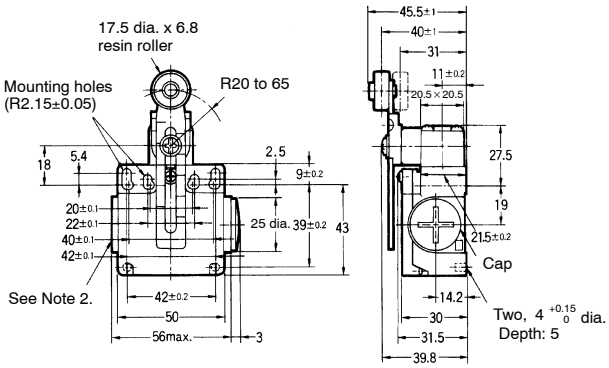

Adjustable Roller Lever (Rubber Roller Lever)

D4D-□127N
D4D-□527N
D4D-□A27N

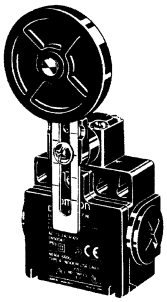

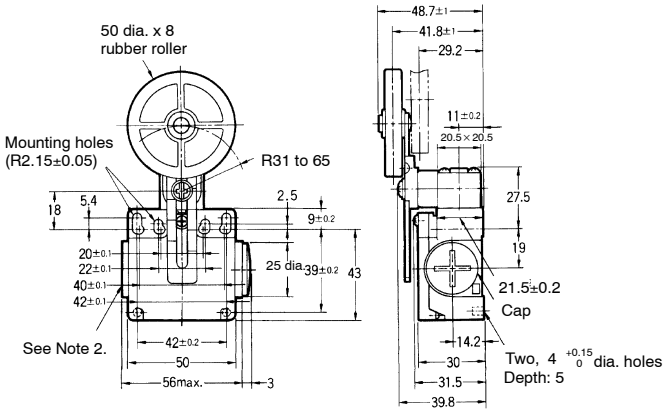

Plunger

D4D-□131N
D4D-□531N
D4D-□A31N

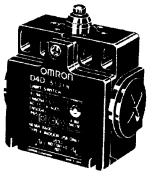

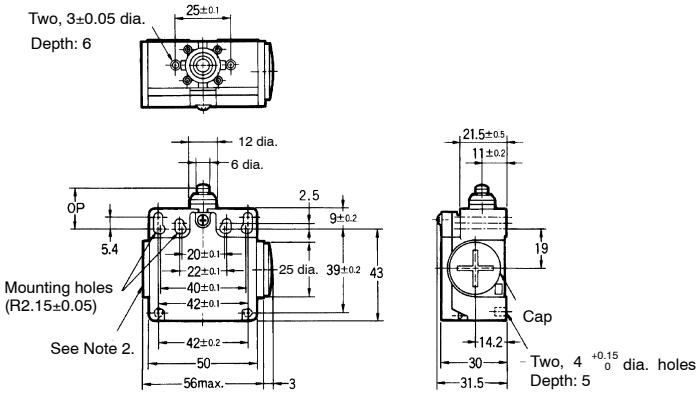

Roller Plunger

D4D-□132N
D4D-□532N
D4D-□A32N

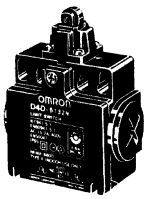

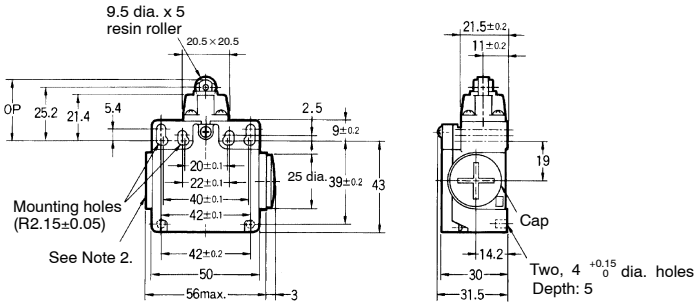

One-Way Roller Arm Lever (Horizontal)

D4D-□162N
D4D-□562N
D4D-□A62N

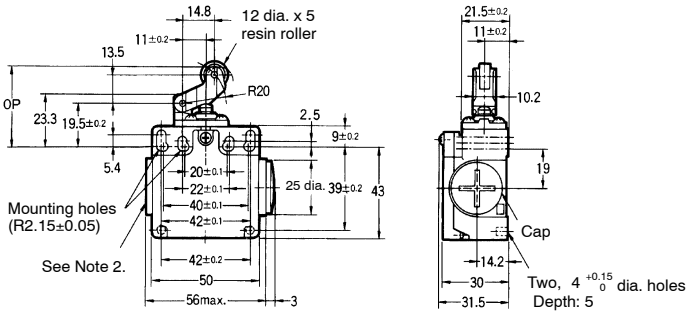

One-Way Roller Arm Lever (Vertical)

D4D-□172N
D4D-□572N
D4D-□A72N

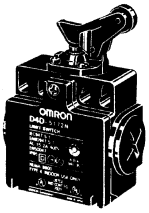

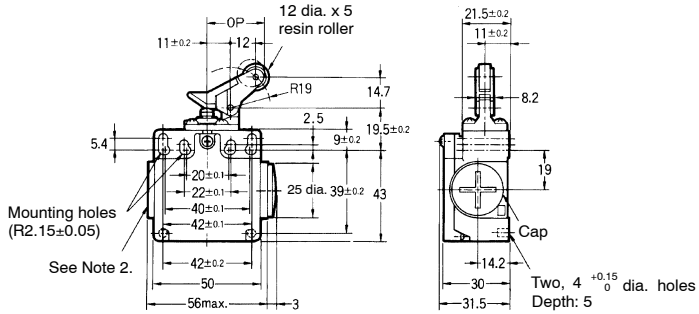

Fork Lever Lock (Right Operation)

D4D-55REN

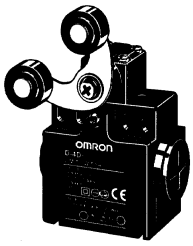

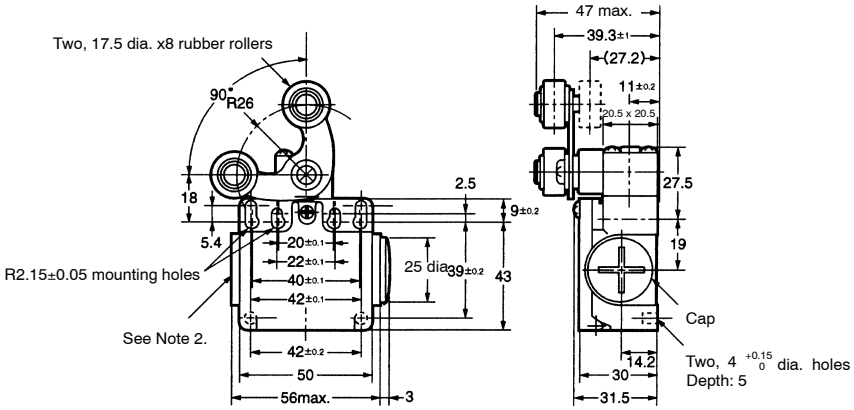

Fork Lever Lock (Left Operation)

D4D-55LEN

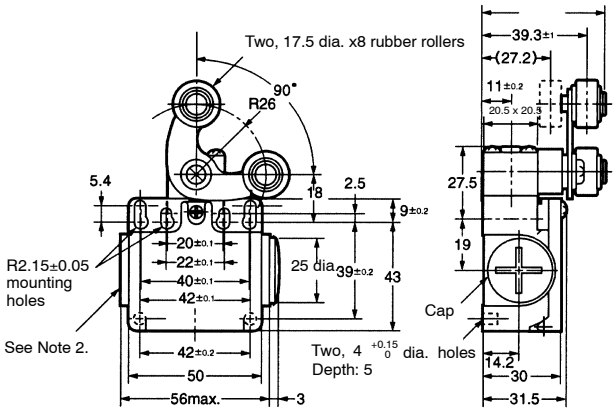

Cat Whisker
D4D-□180N
D4D-□A80N

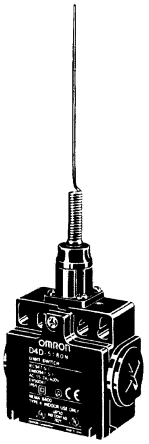

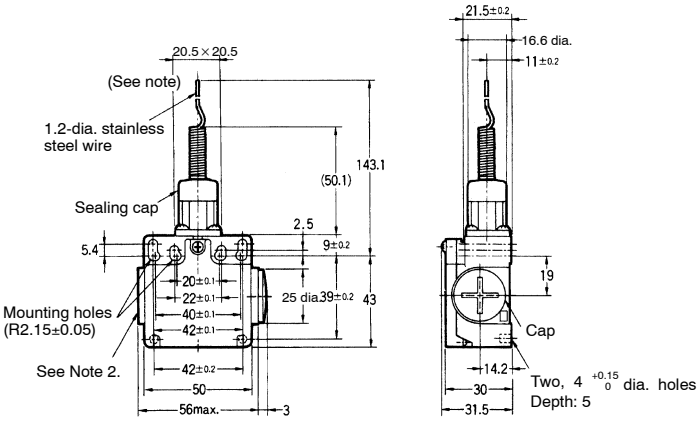

Plastic Rod
D4D-□187N
D4D-□A87N

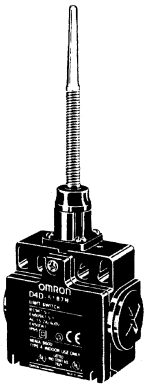

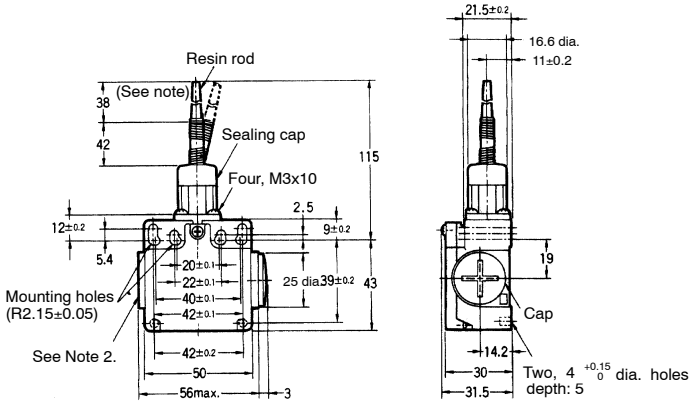

■ LEVERS

Refer to the following for the angles and positions of the dogs.

Roller Lever
D4D-□□20N,
D4D-□□22N

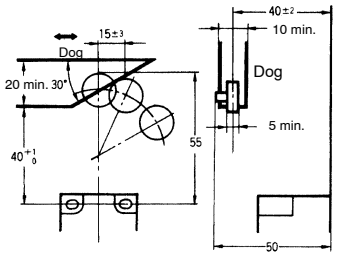

Adjustable Roller Lever
D4D-□□21N
(Reference Value)

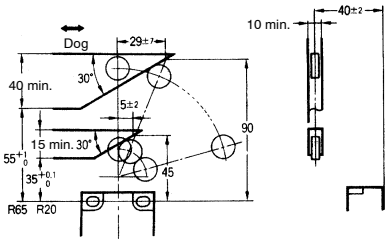

Adjustable Roller Lever
Rubber Roller Lever
D4D-□□27N
(Reference Value)

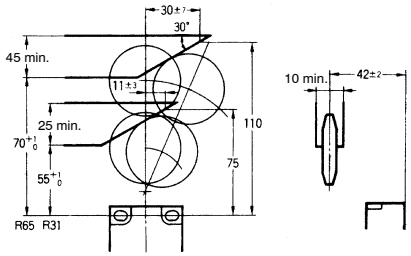

Sealed Plunger
(D4D-□□31N)

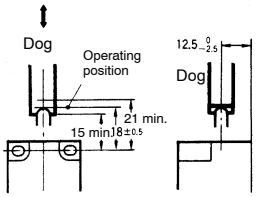

Roller Plunger
(D4D-□□32N)

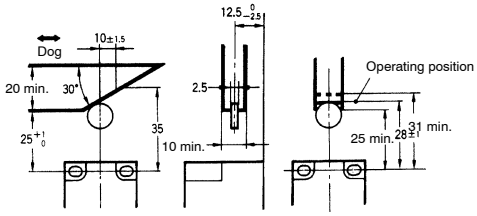

One-way Roller Arm Lever
(Horizontal)
D4D-□□62N

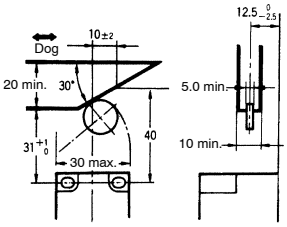

One-way Roller Arm Lever
(Vertical)
D4D-□□72N

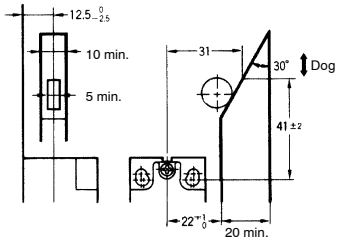

Precautions

⚠ CAUTION

Do not use metal connectors or conduits to wire the Limit Switch, otherwise the conduit of the Limit Switch may break and an electric shock may be received.

- If the D4D-□N is applied to an emergency stop circuit or safety circuit for prevention of injury, use a D4D-□N model that has an NC contact equipped with a force-separation mechanism, and make sure that the D4D-□N operates in the positive mode. Furthermore, secure the D4D-□N with screws or equivalent parts that are tightened in a single direction so that the D4D-□N cannot be easily removed. Then provide a protection cover for the D4D-□N and post a warning label near the D4D-□N.
- Be sure to connect a fuse with a breaking current 1.5 to 2 times larger than the rated current to the Limit Switch in parallel in order to protect the Limit Switch from damage due to short-circuiting.
- When using the Limit Switch for the EN ratings, use the gI or gG 10-A fuse.

■ CORRECT USE

Operating Environment

The Limit Switch is intended for indoor use only. Using the Limit Switch outdoors may result in a malfunction.

Correct Tightening Torque

A loose screw may result in a malfunction. Be sure to tighten each screw to the proper tightening torque as shown below.

No.	Type	Torque
1	Terminal screw	0.59 to 0.78 N • m
2	Cover mounting screw	0.78 to 0.88 N • m
3	Head mounting screw	0.78 to 0.88 N • m
4	Lever mounting screw	1.57 to 1.77 N • m
5	Switch mounting screw (M4)	0.49 to 0.69 N • m
6	Connector	1.77 to 2.16 N • m 1.37 to 1.77 N • m (see note)
7	Cap screw	1.27 to 1.67 N • m

Note: This applies to the 1/2-14NPT connector.

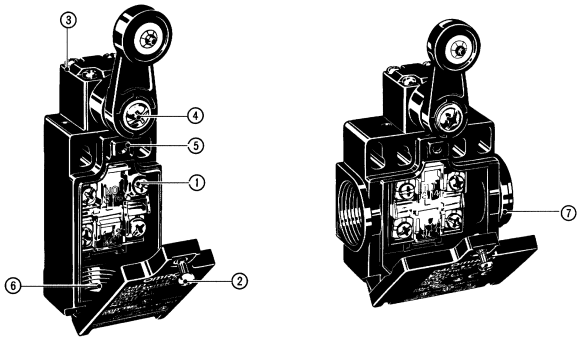

Mounting

Fasten the Switch with two M4 Allen-head bolts and washers. Provide a stud with a diameter of $4^{-0.05}_{-0.15}$ and a height of 4.8 mm max. at two places as shown below so that the Switch is firmly fixed at four points.

Mounting Holes/Studs

1-Conduit Models

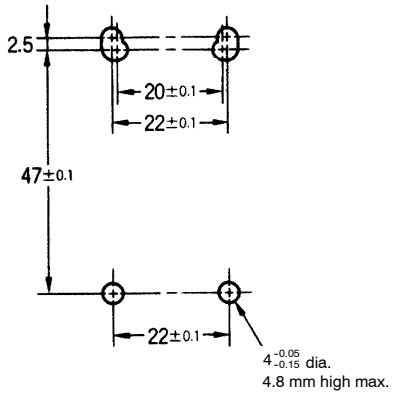

2-Conduit Models

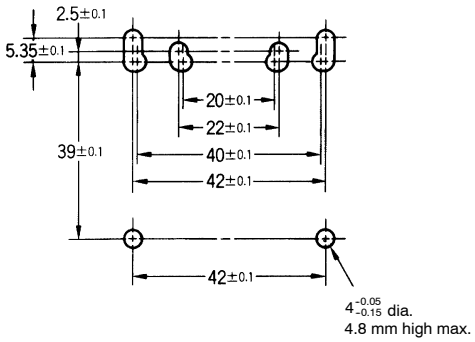

Changing the Lever Angle

- To change the angle of the lever, loosen the lever mounting screw. Then the lever can be set at any angle in 7.5° increments.
- The length of a variable roller lever can be changed by loosening the lever mounting screw.
- The lever mounting position may be inside out after removing the lever mounting screw. Make sure that the lever will not touch the Switch when the lever is mounted inside out.

Changing the Head Direction

If the head direction has been changed, check the torque of each screw and make sure that the screws are free of foreign substances, and that each screw is tightened to the proper torque.

Wiring

- Do not connect the bare lead wires directly to the terminals but be sure to connect each of them by using an insulation tube and M3.5 round solderless terminals and tighten each terminal screw within the specified torque range.
- The proper lead wire is 20 to 14 AWG (0.5 to 2.5 mm^2) in size.

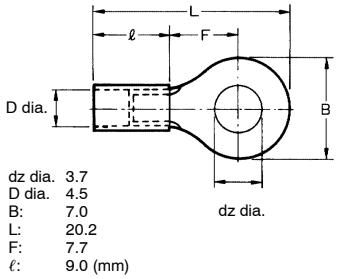

Perform wiring for the crimp terminals in the orientation shown below, so that they are not resting on the case or the cover.

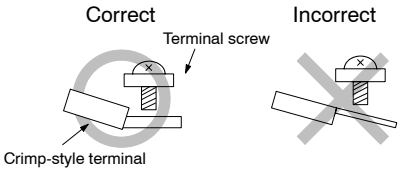

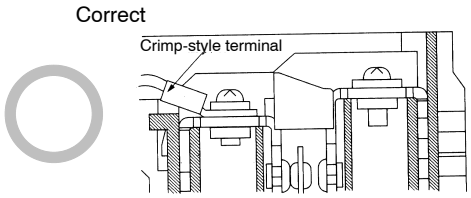

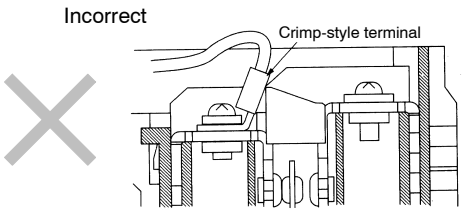

Processing the Conduit Opening

Tighten the connector to a torque of 1.8 to 2.2 N • m (1.37 to 1.77 N • m if it is a 1/2-14NPT). Excessive tightening torque may damage the casing. To satisfy IP65, apply sealing tape to the connector conduit.

The diameter of the cable must be suited to the corresponding connector.

When performing wiring, close conduit openings in any places that will not be used using the cap screws provided as accessories. Tighten the screws to the applicable torque.

Applying the Load

Applying a load to the switch actuator (roller) from a slanted direction may deform or damage the actuator, or deform or damage the rotary spindle, so make sure that the dog is straight.

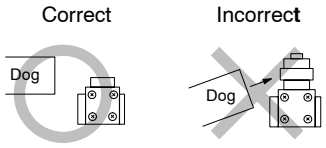

With rubber roller lever models, the rubber roller may turn white with the passage of time, but this will not affect the quality of operation.

Recommended Connector

Conduit size	Manufacturer	Model	Applicable cable diameter
G1/2	OMRON	SC-6	7.5 to 9.0 mm
	LAPP (see note 1)	ST-PF1/2 5380-1002	6.0 to 12.0 mm
	Ohm Denki (see note 2)	OA-W1609	7.0 to 9.0 mm
Pg13.5	LAPP (see note 1)	ST13.5 5301-5030	5.0 to 12.0 mm
1/2-14NPT	LAPP (see note 1)	ST-NPT1/2 5301-6030	6.0 to 12.0 mm

Note: 1. LAPP is a German manufacturer.
2. Ohm Denki is a Japanese manufacturer.

ALL DIMENSIONS SHOWN ARE IN MILLIMETERS. To convert millimeters into inches, divide by 25.4

OMRON ELECTRONICS LLC
One Commerce Drive
Schaumburg, IL 60173
847-843-7900
For US technical support or other inquiries:
800-556-6766

OMRON CANADA, INC.
885 Milner Avenue
Toronto, Ontario M1B 5V8
416-286-6465

OMRON ON-LINE
Global - http://www.omron.com
USA - http://www.omron.com/oei
Canada - http://www.omron.ca

Cat. No. GC SAFETY-2 2/03 Specifications subject to change without notice Printed in USA