FEATURES:

- Standard Intel® CRPS form-factor 73.5mm x 185.0mm x 40.0mm[1] (2.89" x 7.28" x 1.57")
- 2700W total output capability 200-240Vac Nom.
- 1200W total output capability 100-127Vac Nom.
- IEC320-C20 AC input connector
- Card Edge DC Output and Signal I/O
- CRPS compliant connection alignment height of 8.5mm
- HVDC 240V_{DC} capability[2]
- Operation over the range 0°C +55°C without derating
- ≥96% efficiency at 50% load
- 12Vdc Main output, 2700W
- 12Vdc Standby output, 36W
- Compact Package, >82W per cubic inch
- N+1 redundancy
- Active current sharing (main 12Vdc)
- Integral ORING isolation devices for both outputs
- Overvoltage, overcurrent, overtemperature fault protection
- Internal cooling fan, variable speed controlled

[1]The max height of 40mm is limited by the 40mm fan. Actual chassis height is 39mm.
[2] Only in regions where safety regulations permit

For full details go to www.murata-ps.com/rohs

PRODUCT OVERVIEW

D1U74T-W-2700-12-HBxC is a series of compact 2700W highly efficient front end power supply modules that provide a 12Vdc main and a 12Vdc standby output. These power supply modules feature an ultra-high-power density of 82W/cubic inch and are capable of active current sharing. A multi-function status LED with corresponding hardware logic signals is provided, as well as an Intel® CRPS compliant PMBus™ digital communications bus. This 1U low profile power supply is ideal for delivering reliable, efficient power to servers, workstations, storage systems and other 12V distributed power architectures.

ORDERING GUIDE

Part Number	Total Output Power		Main Output	Standby Output	Airflow Direction
	200-240Vac (Vin Nom.)	100-127Vac (Vin Nom.)			
D1U74T-W-2700-12-HB4C	2700W	1200W	12Vdc	12Vdc	Back to Front

INPUT CHARACTERISTICS

Parameter	Conditions	Min.	Nom.	Max.	Units
Input Operating Range	High Line	180	200-240	264	Vac
	Low Line	90	100-127	140	Vac
	HVDC[1]	180	240	300	Vdc
Input Source Frequency		47	50/60	63	Hz
Input Current	High Line (200-240Vac)			15.5	A
	Low Line (100-127Vac)			14	
	HVDC (240Vdc)			13.5	
Inrush Current[2]	Cold start @ 264Vac			35	Apk
Power Factor[4]	230Vac 100% Load	0.95	0.99		W/VA
Efficiency (230Vac), excluding fan load 80 Plus® Certification Titanium[3]	10% load	90			%
	20% load	94			
	50% load	96			
	100% load	91			

[1] Only in regions where safety regulations permit
[2] Excludes EMI filter capacitors
[3] Planned submission
[4] Complies with Plug Load Solutions 80+ PF Titanium requirements

OUTPUT VOLTAGE CHARACTERISTICS

Output	Parameter	Conditions	Min.	Typ.	Max.	Units
12V	Output Set Point Accuracy	50% load; Tamb =25°C	12.08	12.20	12.32	Vdc
	Line and Load Regulation[2]	Measured at PSU side of connector	11.84	12.20	12.57	Vdc
	Ripple Voltage & Noise[1,2]	20MHz Bandwidth; Min Load Capacitance			120	mV p-p
	Output Current	2700W (180-264Vac) Continuous	1		225	A
		1200W (90-140Vac) Continuous	1		100	
	Load Capacitance		2,000		70,000	µF
12VSB	Output Set Point Accuracy	50% load; Tamb =25°C	11.95	12.20	12.45	Vdc
	Line and Load Regulation[3]	Measured at PSU side of connector	11.59	12.20	12.81	
	Ripple Voltage & Noise[1,3]	20MHz Bandwidth; Min Load			120	mV p-p
	Output Current		0.1		3	A
	Load Capacitance		100		3100	µF

[1] Ripple and noise are measured with 0.1µF of ceramic capacitance and 10µF of tantalum capacitance on each of the power supply outputs. A short coaxial cable to the scope termination is used and minimum output bus capacitance specified in above table. To help reduce switching ripple further, an additional 2,200uF low ESR electrolytic capacitor (or equivalent) may be placed in parallel.
[2] Minimum Load of 1A to comply with these limits.
[3] Minimum Load of 0.1A to meet these limits

PROTECTION CHARACTERISTICS

Output	Parameter	Conditions	Min.	Typ.	Max.	Units
Ambient	Overtemperature[2,3]		60		70	
Main 12V[4]	Overcurrent (high line)	Latching [1] after 20sec		260		A
		Latches [1] after 50-100ms		285		
		Latches [1] after 10 - 100µs		356		
	Short-circuit	Latching [1]; percentage of full load, immediate shutdown	>160			%
	Overvoltage	Latching [1]	13.5		14.5	Vdc
12VSB	Overcurrent	OCP: >10ms Automatically recovers after removal of fault condition		3.8		A
	Short-circuit	Immediate shutdown Automatically recovers after removal of fault condition	9			
	Overvoltage	Automatically recovers after removal of fault condition	13.5		14.5	Vdc

[1] Latch-off requires elimination of fault condition and then recycling either the AC input or PS_ON re-cycle to resume operation
[2] Operating the power supply above the maximum specified operating temperature is considered an abnormal condition, may negatively impact power supply life and is not recommended
[3] As reported by the internal power supply PMBus intake air temperature sensor
[4] A fault on any output other than Standby does not cause the Standby output to turn off

ENVIRONMENTAL CHARACTERISTICS

Parameter	Conditions	Min.	Typ.	Max.	Units
Storage Temperature Range		-40		70	°C
Operating Temperature Range (Sea Level)[1]	2700W (180-264Vac) Continuous	0		55	
	1200W (90-140Vac) Continuous	0		55	
Humidity	Operating; non-condensing	5		85	%
	Non-operating; non-condensing	5		95	
Altitude, Operating	Derate 1°C per 304M to simulate the effects of altitude imposed on the power supply cooling system	-50		3050	m
Altitude Non-Operating		-50		15,200	
Shock	non-operating			30	G
Operational Vibration	Sine sweep; 5-500Hz			0.5	
	Random vibration, 5-500Hz			3.13	
MTBF	Tamb = 55°C; 75% Load; nominal AC input	250K			Hrs.
Operating Life	Tamb = 55°C; 20% time at 20% load; 80% of the time at 80% load; nominal AC input	5			Years
Weight			1.05		kg
Input Fuses	**Caution:** Single line fuse on the line (Hot) wire of the AC input. The input fuse shall be a fast blow type 20A axial 420V fuse.				

[1]Based testing power supply in free air; actual results in an end user's system may vary due to the effects of back-pressure.

ISOLATION CHARACTERISTICS

Parameter	Conditions	Min.	Typ.	Max.	Units
Insulation Safety Rating / Test Voltage	Input to Output - Reinforced	4242			Vdc
	Input to Chassis - Basic	2121			

EMISSIONS AND IMMUNITY

Characteristic	Standard	Compliance
Input Current Harmonics	IEC/EN 61000-3-2	Complies with Class A limits
Voltage Fluctuation and Flicker	IEC/EN 61000-3-3	Complies
Conducted Emissions	FCC 47 CFR Part15/CISPR22/EN55032	Class A
ESD Immunity	IEC/EN 61000-4-2	±8KV Contact; ±15KV air discharge; Criteria A[2]
Radiated Field Immunity	IEC/EN 61000-4-3	3V/m, 1KHz, 80% AM, 80MHz to 1GHz Criteria A[2]
Electrical Fast Transients/Burst Immunity	IEC/EN 61000-4-4	[1] Level 3 (2kV), criteria A[2]
Surge Immunity	IEC/EN 61000-4-5	[1] Level 3 (2kV Line-Earth, 2kV Line-Line), criteria A[2]
RF Conducted Immunity	IEC/EN 61000-4-6	Level 2 (3V/M) criteria A[2]
Voltage Dips, Interruptions	IEC/EN 61000-4-11	230Vin, 100% load, Phase 0°, Dip 100% Duration 10ms (VSB:A,V1:B) 230Vin, 50% load, Phase 0°, Dip 100% Duration 20ms (VSB:A, V1:B) 230Vin, 100% load, Phase 0°, Dip 100% Duration > 20ms (VSB, V1:B)
Safety Approval Standards	UL62368-1: 2014 （2nd Edition） (Information Technology Equipment – safety - Part 1: General Requirements). CAN/CSA-C22.2 No. 62368-1: 2014 (2nd Edition） (Information Technology Equipment - Safety - Part 1: General Requirements) TUV: EN 62368-1:2014 (2nd Edition) CQC: GB4943.1-2011 BSMI: CNS14336-1 EAC: IEC 60950-1 ： 2005, AMD1:2009, AMD2:2013 KC: K60950-1 (2011-12) IRAM: IEC 60950-1 ： 2005, AMD1:2009, AMD2:2013 BIS: IEC 60950-1 ： 2005, AMD1:2009, AMD2:2013 CB: IEC 60950-1:2005, AMD1:2009, AMD2:2013 CB: IEC 62368-1:2014 (2nd Edition)	

[1] Measured at power supply's AC input connector
[2] Installed in system

AIRFLOW PERFORMANCE

P-Q CURVE (Fan speed: 100% duty cycle, test method: AMCA 210-07, Fig. 12)

Back to Front Airflow (HB4C) Model

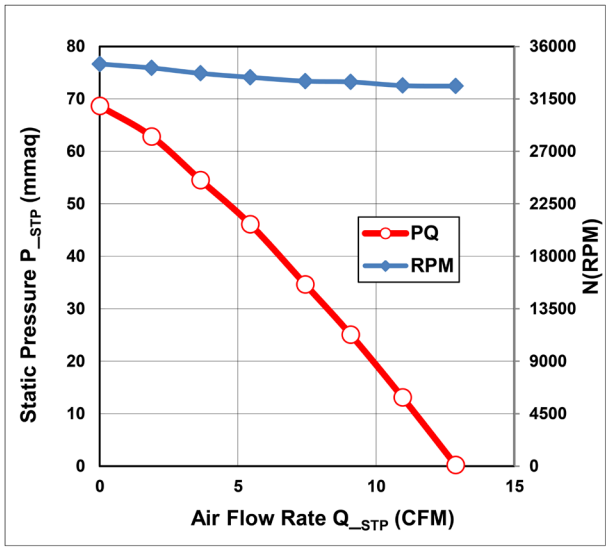

STATUS AND CONTROL SIGNALS

Signal Name	I/O	Description	Interface details
PW_OK	O	This is a power OK signal and is pulled high to indicate all the outputs are within the regulation limits.	Open Collector[1,4] Source current: 2mA max. Sink Current: 0.4mA max. Rise/Fall time: 100uS max.
VIN_GOOD	O	This signal is an output that indicates input source power (AC and HVDC) is present and within operating limits	Pull-up: 2K OHM [1,2]
SMBALERT#	O	SMBALERT# is a PMBus™ 1.2 complaint signal driven low to alert the system that a warning/fault[6] occurred.	pull-up: 10k OHM[1,4] Source current: 4mA max. Sink Current: 50uA max. Rise/Fall time: 100uS max.
PRESENT_L	O	Passive signal that can be used by the host system to detect the presence of an installed PSU. Connected to GND/+12V RTN within the power supply module	
PSON#	I	Provides main 12V output on/off control; "ON" when single pulled low (≤1Vdc) and "OFF" when not pulled low	pull-up: 10K OHM[1,2] Source current: 4mA max.
A0 & A1	I	Internal SMBus slave device address selection settings required for digital communications. Slave Address (hex) PSU µP / EEPROM — A1 pin state — A0 pin state B0h / A0h — Low — Low B2h / A2h — Low — High B4h / A4h — High — Low B6h / A6h — High — High	Each pulled up: 10K OHM[1,5]
PMBus SCL	I/O	Serial clock input to PSU compatible with PMBus™ 1.2.	pull-up: 2K OHM[1,2]
PMBus SDA	I/O	Bi-directional serial data line compatible with PMBus™ 1.2.	pull-up 2K OHM[1,2]
12VRS + & -	I	These signal pins can be connected at system side of load to provides up to +/-200mV compensation for main output voltage drop due to load connections. PSU will not be damaged by Incorrect polarity connection (may shut down to protect itself).	
ISHARE	I/O	This signal is an analogue DC voltage that forms a common ISHARE bus with all parallel connected PSUs within the host system and changes in proportion to load. Each PSU uses this signal to control the PSU bus voltage thereby maintaining current share performance. The DC bus voltage for a single PSU @ 100% high line full load is 8Vdc and 4Vdc for two PSUs sharing the same load equally.	Analogue voltage: 0 to +8V
Cold Redundancy Bus	I/O	CR signals from all load sharing power supply modules can be tied together to form a common Cold redundancy bus, required for cold redundant operation, compliant with CRPS Common Requirement Specification. This bus functions as follows: • Pull-up bus voltage: Bus pull-up is provided by the single PSU assigned the roll of "COLD_REDUNDANT ACTIVE". Only the PSU assigned this roll provides the pull-up path and is why this PSU is referred to as the "Master". • Each bus connected PSU drives the CR signal low when any fault is detected. • Each bus connected PSU powers on its main output rapidly within 100µS after detection of LOW state.	Pulled 680R to internal bias supply voltage of the ACTIVE & MASTER PSU; Pull-Down = 40K OHM.

Signal Related Notes:

1) Pulled up to the 3.3Vdc rail, which is derived from VSB and an internal housekeeping rail ("diode ORed") and is compatible with the voltage levels of TTL and CMOS logic families.
2) Logic high: 2.1Vdc to 3.46Vdc; logic low: 0 to 0.8Vdc
3) Pulled down to VSB return.
4) Logic high 2.4Vdc to 3.46Vdc; A logic low is 0 to 0.4Vdc
5) Logic high 2.4Vdc to 3.57Vdc; A logic low is 0Vdc to 0.4Vdc
6) This product supports "SMBALERT_MASK" providing flexibility for System/Host to configure Fault/Warning bits SMBAERT# supports. Refer to the Intel® CRPS -185 specifications for additional details.

STATUS LED

Single bi-colour (Amber/Green) LED provides the following indication characteristics:

PSU Status	LED Status
Output on and OK	Green
AC power not present	Off
Standby state; AC present; Main output off, VSB on	1Hz Blink Green
power supply module is in cold standby state or always standby state as defined in the Cold Redundancy section of CRPS Common Requirement Specification	1Hz Blink Green
NO AC power however AC input power is applied to a parallel connected power supply module	Amber
Power supply critical event causing a shutdown; failure, overcurrent, short circuit, overvoltage, fan failure, over temperature	Amber
Power supply warning events where the power supply continues to operate; high temperature, high power, high current, slow fan	1 Hz Blink Amber
Power supply firmware updating	2Hz Blink Green

TIMING CHARACTERISTICS

Timing Diagram

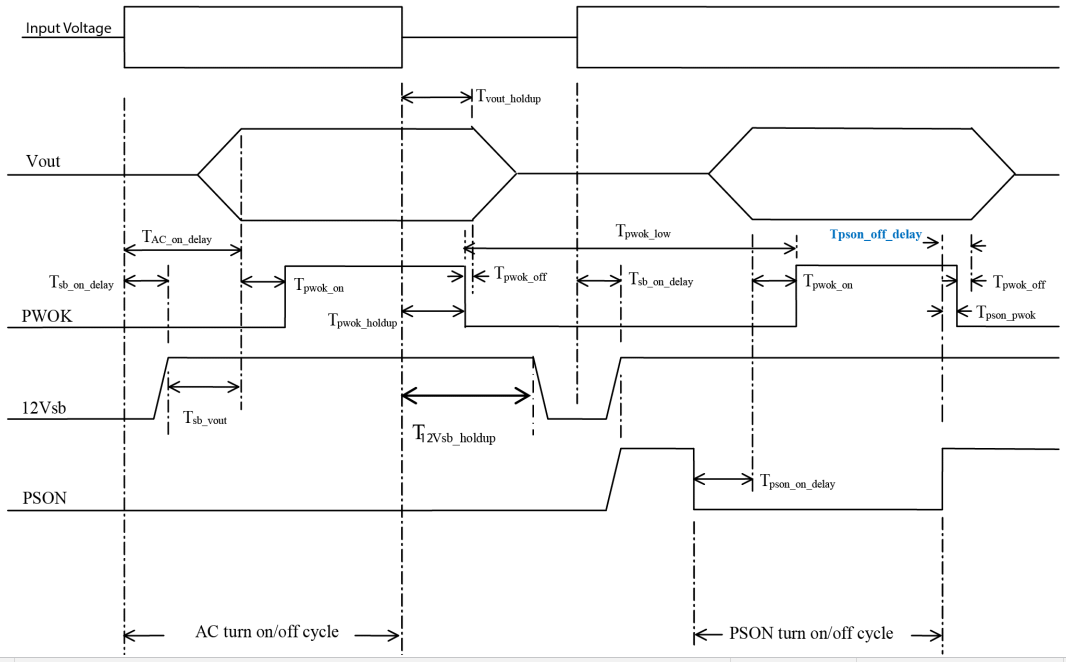

ITEM	DESCRIPTION	MIN	MAX	UNITS
Tvout_rise	Output voltage rise time for 12V and 12VSB from 10% to within regulation limits	10	70	ms
Tsb_on_delay	Delay from Input Voltage being applied to 12VSB being within regulation	-	1500	ms
Tac_on_delay	Delay from Input Voltage being applied to all output voltages being within regulation	-	3000	ms
Tvout_holdup	Time that the 12V output voltage remains within regulation after loss of Input Voltage Note: for 70% of rated load only	11	-	ms
Tpwok_holdup	Delay from loss of Input Voltage to de-assertion of PWOK Note: for 70% of rated load only	10	-	ms
Tpson_off_delay	Delay from PSON# de-asserted to power supply turning off	-	5	ms
Tpson_on_delay	Delay from PSON# active to output voltages within regulation limits	5	400	ms
Tpson_pwok	Delay from PSON# deactivate to PWOK de-assertion	-	5	ms
Tpwok_on	Delay from output voltages within regulation limits to PWOK assertion at turn on	100	500	ms
Tpwok_off	Delay from PWOK de-asserted to output voltages dropping out of regulation limits	1	-	ms
Tsb_vout	Delay from 12VSB being in regulation to outputs being in regulation, at turn on of Input Voltage	50	1000	ms
12VSB_holdup	Time the 12VSB output voltage stays within regulation after loss of Input Voltage	70	-	ms

DC OUTPUT & SIGNAL INTERFACE (POWER MODULE SIDE, CARD EDGE)

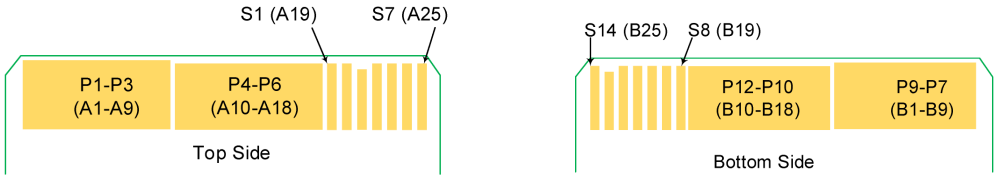

TOP-SIDE:				BOTTOM-SIDE:			
Name	High Pwr conn[2]	Regular Conn[1]	Sequence	Name	High Pwr Conn[2]	Regular Conn1	Sequence
GND/+12V RTN[3]	P1	A1	Long	GND/+12V RTN[3]	P7	B1	Long
GND/+12V RTN		A2		GND/+12V RTN		B2	
GND/+12V RTN		A3		GND/+12V RTN		B3	
GND/+12V RTN	P2	A4	Long	GND/+12V RTN	P8	B4	Long
GND/+12V RTN		A5		GND/+12V RTN		B5	
GND/+12V RTN		A6		GND/+12V RTN		B6	
GND/+12V RTN	P3	A7	Long	GND/+12V RTN	P9	B7	Long
GND/+12V RTN		A8		GND/+12V RTN		B8	
GND/+12V RTN		A9		GND/+12V RTN		B9	
+12V	P4	A10	STD	+12V	P10	B10	STD
+12V		A11		+12V		B11	
+12V		A12		+12V		B12	
+12V	P5	A13	STD	+12V	P11	B13	STD
+12V		A14		+12V		B14	
+12V		A15		+12V		B15	
+12V	P6	A16	STD	+12V	P12	B16	STD
+12V		A17		+12V		B17	
+12V		A18		+12V		B18	
PMBus SDA	S1	A19	STD	A0 (SMBus address)	S8	B19	STD
PMBus SCL	S2	A20	STD	A1 (SMBus address)	S9	B20	STD
PSON#	S3	A21	SHORT	+12VSB	S10	B21	STD
SMBAlert#	S4	A22	STD	Cold Redundancy Bus	S11	B22	STD
Return Sense	S5	A23	STD	12V Load share bus	S12	B23	STD
+12V Remote Sense	S6	A24	STD	PRESENT_L	S13	B24	SHORT
PWOK	S7	A25	STD	VIN_GOOD	S14	B25	STD

[1] Regular 50-pin card edge connector FCI-Amphenol model 10035388-102LF SHOWN FOR INFORMATION PURPOSES ONLY included as part of the Intel CRPS-185 specifications. However, the recommended mating connector for this power supply is High Power Amphenol.
[2] High power connector Amphenol model HPG12P14SRT153T
[3] GND/+12V RTN are connected internally to Chassis

MATING SIDE OUTPUT CONNECTOR

Compatible With FCI Amphenol HPG12P14SRT153T

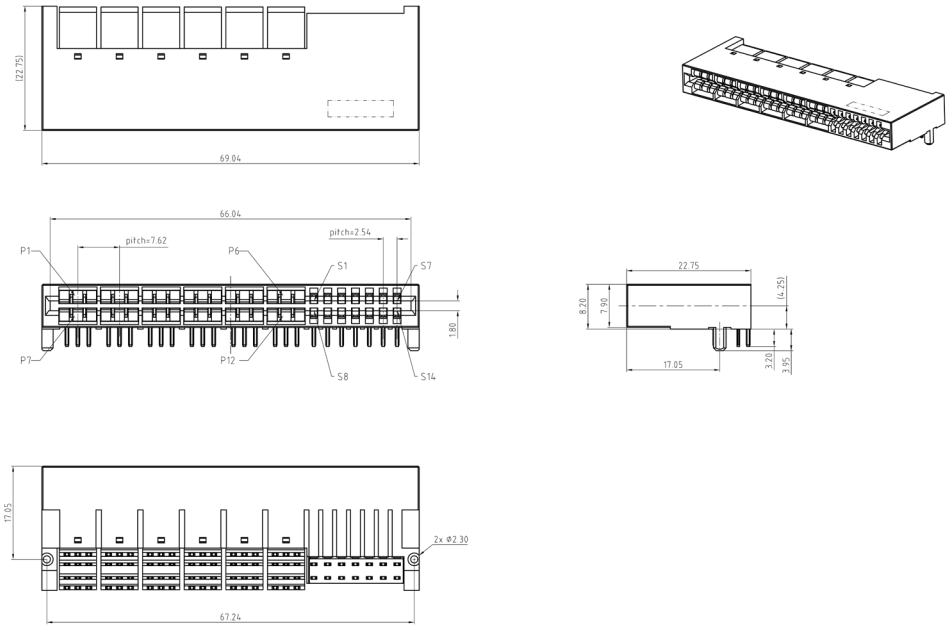

WIRING DIAGRAM

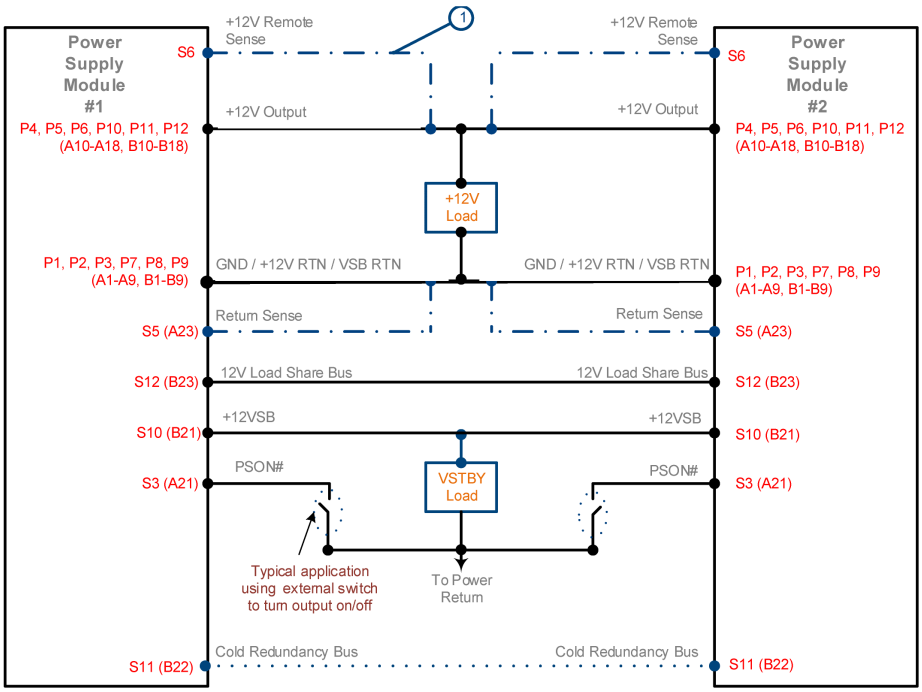

1) Dotted lines show optional remote sense connections. Optional remote sense lines can be attached to a load that is a distance away from the power supply to improve regulation at the load

Current Sharing Notes

1. Main Output: Current sharing is achieved using the active current share method
2. Current sharing can be achieved with the +12V Remote Sense and Return Sense connected to the common load
3. The 12V Output and 12V STBY output has an internal ORING MOSFET for additional redundancy/internal short protection
4. The current sharing pin is connected between sharing units (forming an ISHARE bus). It is an input and/or an output (bi-directional analogue bus) as the voltage on the line controls the current share between sharing units. A power supply will respond to a change in this voltage but a power supply can also change the voltage depending on the load drawn from it. On a single unit the voltage on the pin (and the common ISHARE bus would read 8VDC at 100% load (power module capability). For two units sharing the same load this would read approximately 4VDC for perfect current sharing (i.e. 50% power capability per unit)
5. The load for both the main 12V and the VSB rails at initial startup shall not be allowed to exceed the capability of a single unit. The load can be increased after assertion of PW_OK signal, to allow all sharing units to achieve steady state regulation