D1U74T-W-1600-12-HBxC Series

74mm 1U Front End AC-DC Power Supply Converter

Murata Power Solutions

FEATURES

- 1636W continuous output power
- 80+ Certified Titanium
- IEC60320-C14 AC input connector
- 12V main output, 12V 36W standby output
- 1U height: 74mm x 264mm x 40mm
- > 33 Watts per cubic inch density
- N+1 redundant, Hot Swap Capable, up to 9 units
- Active (digital) current sharing main output; ORing /isolation provided for both outputs
- Internal cooling fan
- Overvoltage, overcurrent, over temperature Protection
- PMBus™/I²C interface with LED status indicator
- RoHS compliant
- Two Year Warranty

For full details go to
www.murata-ps.com/rohs

PRODUCT OVERVIEW

D1U74T-W-1600-12-HBxC is a series of 1636W highly efficient power factor corrected front end power supplies featuring a 12Vdc main and 12V standby outputs, active current sharing, intuitive status LED, hardware logic signals and PMBus™ digital communications. The low profile 1U 33W/cubic inch package make this series ideal for delivering reliable, efficient power to servers, workstations, storage systems and other 12V distributed power architectures.

ORDERING GUIDE

Part Number	Total Output power (200-240 Vac nominal)	Main Output	Standby Output	Airflow
D1U74T-W-1600-12-HB4C	1636W	12Vdc	12Vdc	B - F

INPUT CHARACTERISTICS

Parameter	Conditions	Min.	Nom.	Max.	Units
Input Operating Range		180	200-240	264	Vac
Input Source Frequency		47	50-60	63	Hz
Turn-on Input Voltage	Ramp up	172	176	180	Vac
Turn-off Input Voltage	Ramp down	164	168	172	
Maximum current	1600W, Vin 180Vac/60Hz			10	Arms
Inrush Current	Cold start @ 264Vac			100	Apk
Power Factor	200/240Vac nominal full load	0.95	0.99		
Efficiency (230Vac), excluding fan load 80 Plus® Certification Titanium	10% load	90			%
	20% load	94			
	50% load	96			
	100% load	91			

OUTPUT VOLTAGE CHARACTERISTICS

Output Voltage	Parameter	Conditions	Min.	Typ.	Max.	Units
12V	Output Setpoint Accuracy	50% load; Tamb =25°C	12.08	12.12	12.16	Vdc
	Line and Load[2] Regulation[2,4]	Measured at PSU side of output connector card edge	11.51	12.12	12.73	Vdc
	Ripple Voltage & Noise[1,2]	20MHz Bandwidth			200	mV p-p
	Output Current	1600W (180-264 Vac) Continuous	0		132	A
		1728W (180-264 Vac) 12S max., 33.3% Duty Cycle			144	A
	Load Capacitance		1,000		25,000	µF
12VSB	Nominal Output Voltage			12.00		Vdc
	Line and Load Regulation[3]	PS_ON asserted (operating mode, ps_on)	11.40	12.0	12.60	
		PS_ON De-asserted (standby mode, ps_off)	11.51	12.00	12.73	
	Ripple Voltage & Noise[1,3]	20MHz Bandwidth			200	mV p-p
	Output Current[5]		0		3.0	A
	Load Capacitance		100		3100	µF

[1] Ripple and noise are measured with 0.1 µF of ceramic capacitance and 10 µF of tantalum capacitance on each of the power supply outputs. A short coaxial cable to the scope termination is used and minimum output bus capacitance specified in above table.
[2] Minimum Load of 1A to comply with these limits.
[3] Minimum Load of 0.05 to comply with these limits
[4] Peak current capable of 144A, up to 12sec on 36 sec off.
[5] Maximum load current not to exceed 6A for N+1 deployment and maximum rating of a single PSU during start-up.

OUTPUT CHARACTERISTICS

Parameter	Conditions	Min.	Typ.	Max.	Units
Startup Time	AC ramp up			3	s
Dynamic load response	Outputs remain within regulation for the load steps below: 99-132A load step; 0.25A/µs slew rate; 50-5kHz, 10-90% Duty Cycle 66-99 A load step; 0.25A/µs slew rate; 50-5kHz, 10-90% Duty Cycle	11.51		12.73	Vdc
Current sharing accuracy	13A to 132A PSU load (per power supply)		+/-6.6		A
Hot Swap Transients	All outputs remain in regulation	-5		+5	%
Holdup Time	230-240Vac, 100% load, Loss of AC input to de-assertion of AC_OK signal	10			ms
	230-240Vac, 50% full load, Loss of AC input to de-assertion of AC_OK signal	20			ms

ENVIRONMENTAL CHARACTERISTICS

Parameter	Conditions	Min.	Typ.	Max.	Units
Storage Temperature Range	Storage	-5		50	°C
	Transport 5-95% relative humidity	-40		70	
Operating Temperature Range	1636W; 230-240Vac nom.	0		40	
Operating Humidity	Noncondensing	5		90	%
Storage Humidity		5		95	
Altitude (Derating at 40°C)		3000			m
Shock	Non-operating, drop test from 50mm height, 1 time per axis (x, y, Z)				
Operational Vibration	Sine sweep: 1) 3-60Hz, 0.5G X, Y, Z axis, 2 minutes cycle time, 5 cycles per axis, 10 minutes vibration time 2) 10-500Hz, 0.5G X, Y, Z axis, 2.6 minutes cycle time, 5 cycles per axis, 13 minutes vibration time				
MTBF	Per Telcordia SR-332 M1C3 @40°C	540K			hrs.
Safety Approval Standards	cULus: 60950-1, 2nd Edition, 2014-10-14 (Information Technology Equipment - Safety - Part 1: General Requirements) CAN/CSA C22.2 No. 60950-1-07, 2nd Edition, 2014-10 (Information Technology Equipment - Safety - Part 1: General Requirements) TUV: IEC 62368-1, Ed.2, IEC60950-1:2006+A11:2009+A1:2010+A12:2011+A2:2013 BSMI: CNS13438; CNS14336-1 (1999/9/30); CNS15663				
Input Fuse	Dual 12.5A fast acting fuses provide a series protective element. Note both input “line” and “neutral” are fused.				
Weight	1190g				

Airflow Back-Pressure P-Q curves

Back-Pressure imposed by the PSU at various fan speed setting, % of maximum fan duty-cycle

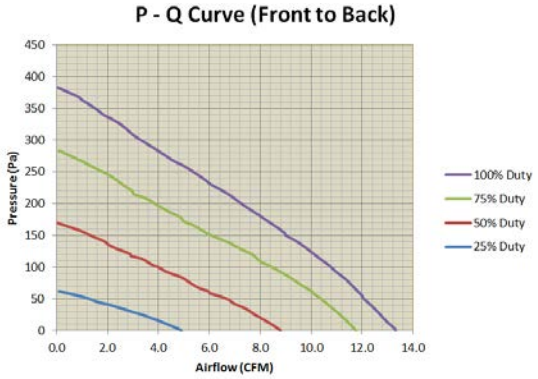

PROTECTION CHARACTERISTICS

Output Voltage	Parameter	Conditions	Min.	Typ.	Max.	Units
12V	Over temperature (intake)	Latching [1], both outputs	60	65	70	°C
12V	Overvoltage	Latching [1]; 12VSB maintains operation	13.3		14.5	Vdc
	Short-circuit	Latching [1]	200		-	A
	Overcurrent	Latching [1] after 2 seconds to accommodate peak power and the 12VSB remains operational	145.2		158.4	A
		Latches [1] immediately	158.4		-	A
	Under voltage protection	Latching[1], <1ms	9.5		10.3	Vdc
12VSB	Overvoltage	Latching [1] Both outputs	13.3		14.5	Vdc
	Overcurrent	Non-Latching; both outputs shutdown or hiccup if overcurrent persists longer than 2 seconds. Self recovers after fault cleared.	3.3		3.74	A
		Shutdown after 15mS (both outputs). Non-Latching	3.7		-	
	Under voltage protection	Latching, <1ms	10		11	Vdc

[1] Latch-off requires elimination of fault condition and then recycling either the AC input or PS_ON re-cycle or PMBus "Clear Faults" command to resume operation

ISOLATION CHARACTERISTICS

Parameter	Conditions	Min.	Typ.	Max.	Units
Insulation Safety Rating / Test Voltage	Input to Output - Reinforced	3000			Vrms
	Input to Chassis - Basic	1500			Vrms
Isolation	Output to Chassis	500			Vdc

EMISSIONS AND IMMUNITY

Characteristic	Standard	Compliance
Input Current Harmonics	IEC/EN 61000-3-2	Complies with Class A limits
Voltage Fluctuation and Flicker	IEC/EN 61000-3-3	Complies
Conducted Emissions	FCC 47 CFR Part15/CISPR22/EN55032	Class A
ESD Immunity	IEC/EN 61000-4-2	±8KV Contact; ±15KV air discharge; Criteria A
Radiated Field Immunity	IEC/EN 61000-4-3	3V/m, 1KHz, 80% AM, 80MHz to 1GHz Criteria A
Electrical Fast Transients/Burst Immunity	IEC/EN 61000-4-4	[1] Level 3 (2kV), criteria A
Surge Immunity	IEC/EN 61000-4-5	[1] Level 3 (2kV Line-Earth, 1kV Line-Line), criteria A
RF Conducted Immunity	IEC/EN 61000-4-6	Level 2 (3V/M) criteria A
Voltage Dips, Interruptions	IEC/EN 61000-4-11	230Vin, 100% load, Phase 0°, Dip 100% Duration 10ms (A) 230Vin, 50% load, Phase 0°, Dip 100% Duration 20ms (VSB:A, V1:B) 230Vin, 100% load, Phase 0°, Dip 100% Duration > 20ms (VSB, V1:B)

[1] measured at power supply's AC input connector [2] INSTALLED IN SYSTEM

STATUS LED

Single bi-colour (Amber/Green) LED provides the following indication characteristics:

PSU Status	12V Main	VSB	LED Status	Notes
Normal operation	On	On	Green	
Normal Standby	Off	On	Blinking Green @ 0.5Hz	
PSU Fault – (PMBus Register Status Fault bits. Refer to PMBus™ ACAN for specific fault triggers)	Off	Off	Off or Amber	Amber if VSB powered by an adjoining PSU or if PSU internal housekeeping supply operating
PSU Fault – (set by PMBus Register Status Fault bits. Refer to PMBus™ ACAN for specific fault details)	Off	ON	Amber	
PSU Warning – (set by PMBus Register Status Warning bits. Refer to PMBus™ ACAN for specific warning details)	On	On	Blinking Amber @ 0.5Hz	With the exception of VIN_OV_W
AC input off	Off	Off	Off	
AC input is off, VSB supplied by another adjoined PSU	Off	On	Amber	

STATUS AND CONTROL SIGNALS

Signal Name	I/O	Description	Interface details
AC_OK Pin Table	O	Driven high when input source is within acceptable limits; driven low to indicate loss of input source. De-asserts 0.4ms minimum before loss of main output	pull-up: 1K OHM[14] Source current: 0.5mA max. Sink Current: 4mA max. Rise/Fall time: 100uS max.
PW_OK Pin Table	O	Pulled high indicates 12V main output is valid; driven low indicates output is < regulation limit or AC input is lost for duration exceeding min. holdup time.	pull-up: 392 OHM[14] Source current: 2mA max. Sink Current: 4mA max. Rise/Fall time: 100uS max.
SMB_ALERT Pin Table	O	Low state indicates presence of fault or warning condition(s) except register bit VIN_OV_W. High state indicates normal operating conditions. See PMBus ACAN for additional details. Additionally: PMbus status register bit(s) set before assertion of signal. SMB_ALERT de-asserts after all fault and warning conditions are no longer present. LED state is based on same status register bits that determine the state of SMB_ALERT. SMB_ALERT is asserted when AC input loss exceeds the maximum hold-up time Status register fault bits do not reset automatically after stimulus fault clearance; Status register warning bits do reset automatically after removal of warning stimulus; SMB_ALERT de-asserts after all warning and fault bits in status registers are reset. SMB_ALERT does not assert within hold-up time (0 to 10.4ms min. after loss of input). N+1 applications: SMB_ALERT will remain asserted (Low) after loss of AC Register bit(s) are set within 30mS of the occurrence of fault(s)/warning(s)	pull-up: 392 OHM[14] Source current: 2mA max. Sink Current: 4mA max. Rise/Fall time: 100uS max.
PRESENT_L Pin Table	O	Used by the host system to detect the presence of an installed PSU.	Pull-down: 0 OHM[1]
PSKILL Pin Table	I	Short pin MLFB signal and is used by PSU to minimize glitches by shutting off its main output during insertion/extraction. N+1 applications system side should permanently pull-down this signal to VSB return; 1mA maximum source current.	pull-up: 10K OHM[1]
PS_ON Pin Table	I	Required to turn the main 12V output on/off, remotely. This output is "ON" when single pulled low[3] or "OFF" when not pulled low (or signal left un terminated, floating)	pull-up: 10K OHM[12] Source current: 1mA max.
PSA0 & PSA1	I	Two address selection pins are provided for host system selection of the address of both internal slave devices (microprocessor & EEPROM) for digital communications. Slave Address (hex) PSU µP / EEPROM — A1 pin state — A0 pin state B0h / A0h — Low — Low B2h / A2h — Low — High B4h / A4h — High — Low B6h / A6h — High — High	Each pulled up: 10K OHM[15]
SCL Pin Table	I/O	Serial clock input to PSU compatible with PMBus™ 1.2. and is diode isolated to prevent unpowered or faulty PSU loading the bus	pull-up: 5K9 OHM[12]
SDA Pin Table	I/O	A bi-directional serial data line compatible with PMBus™ 1.2. and is diode isolated to prevent unpowered or faulty PSU loading the bus	pull-up 5K9 OHM[12]
12VRS (+) & (-) Pin Table	I	Analogue are provided for connection at the load to allow compensation by the PSU of voltage drop across the main output DC connection bus. Output voltage measured at the output connector pin shall remain within regulation range plus and additional +/- 200mV should one or both sense lines be open. Unused remote sense lines can be configured for local sense by connecting 12VRS (+) directly to 12V main output + and 12VRS (-) directly to +12V main output RTN. PSU will not be damaged by Incorrect polarity connection and will shut down to protect itself.	Compensation for up to 0.12Vdc total connection drop (output and return connections).
ISHARE Pin table	I/O	This signal is an analogue DC voltage that forms a common ISHARE bus with all parallel connected PSUs within the host system and changes in proportion to load. Each PSU uses this signal to control the PSU bus voltage thereby maintaining current share performance. The DC bus voltage for a single PSU @ 100% load is 8Vdc +/-3 and 4Vdc +/-3% for two PSUs sharing the same load equally.	Analogue voltage: 0 to +8V +/-3% maximum; 10K to +12V_RTN

Signal Related Notes:

1) Pulled up to the 3.3Vdc rail, which is derived from VSB and an internal housekeeping rail ("diode ORed") and is compatible with the voltage levels of TTL and CMOS logic families. 2) Logic high: 2.1 to 3.46Vdc; logic low: 0 to 0.8Vdc 3) Pulled down to VSB return. 4) Logic high 2.4 to 3.46Vdc; A logic low is 0 to 0.4Vdc 5) Logic high 2.4 to 3.57Vdc; A logic low is 0 to 0.4Vdc

TIMING SPECIFICATIONS

Turn-On and Turn-Off, PS_ON Sequencing

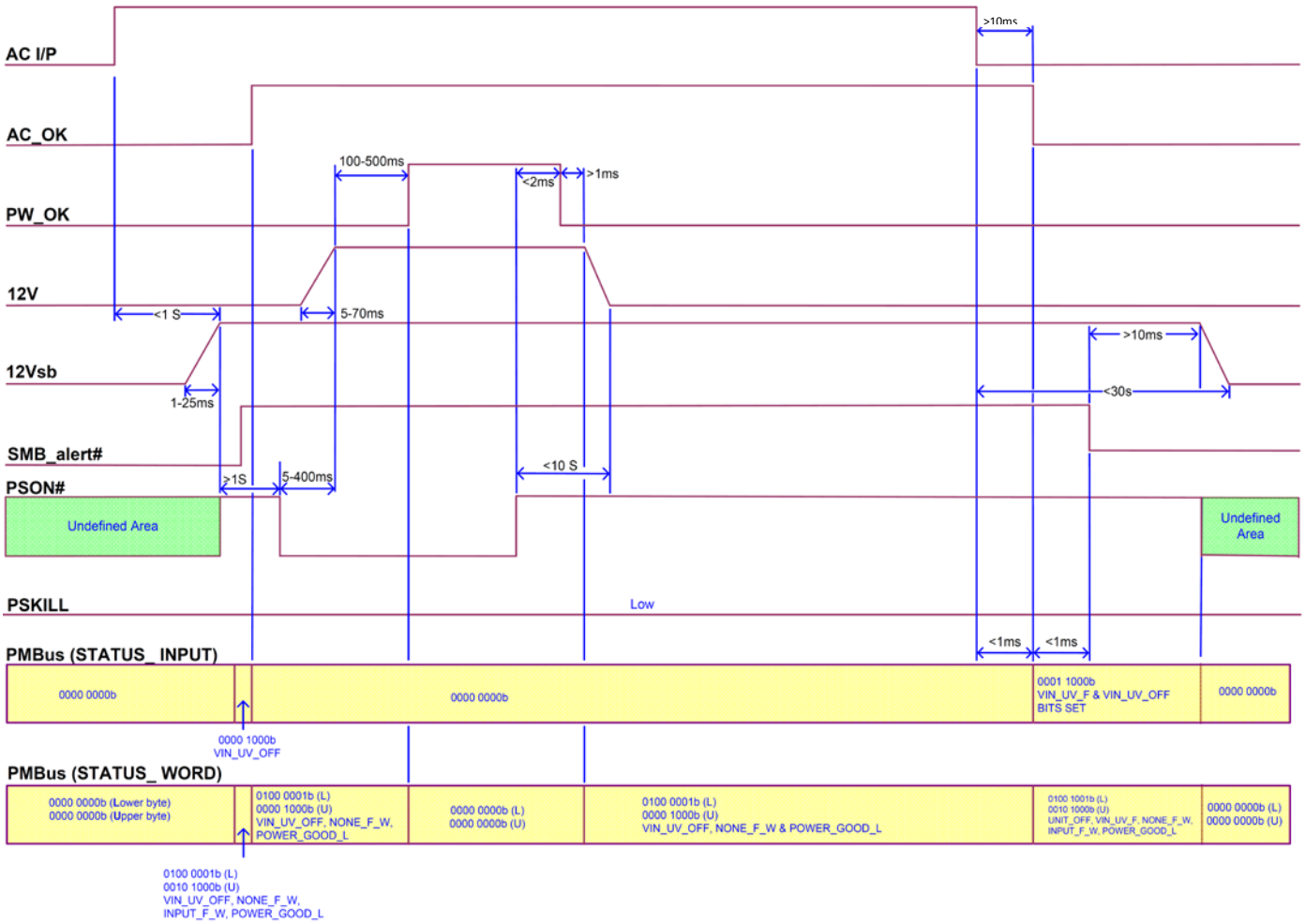

Recommended glitch-free power-up process:

1) PSU is installed into end user system without AC power.
2) Apply AC input voltage
3) Minimum 1s after the AC_OK signal has asserted (Logic High) the main output can be powered up by pulling the PS_ON signal low.

Power supply removal process:

1) Shut off main output by releasing the PS_ON signal
2) Remove AC input voltage
3) After AC_OK signal de-asserts (changes to low state) the PSU can then be removed

TIMING SPECIFICATIONS

AC Removal and Recovery

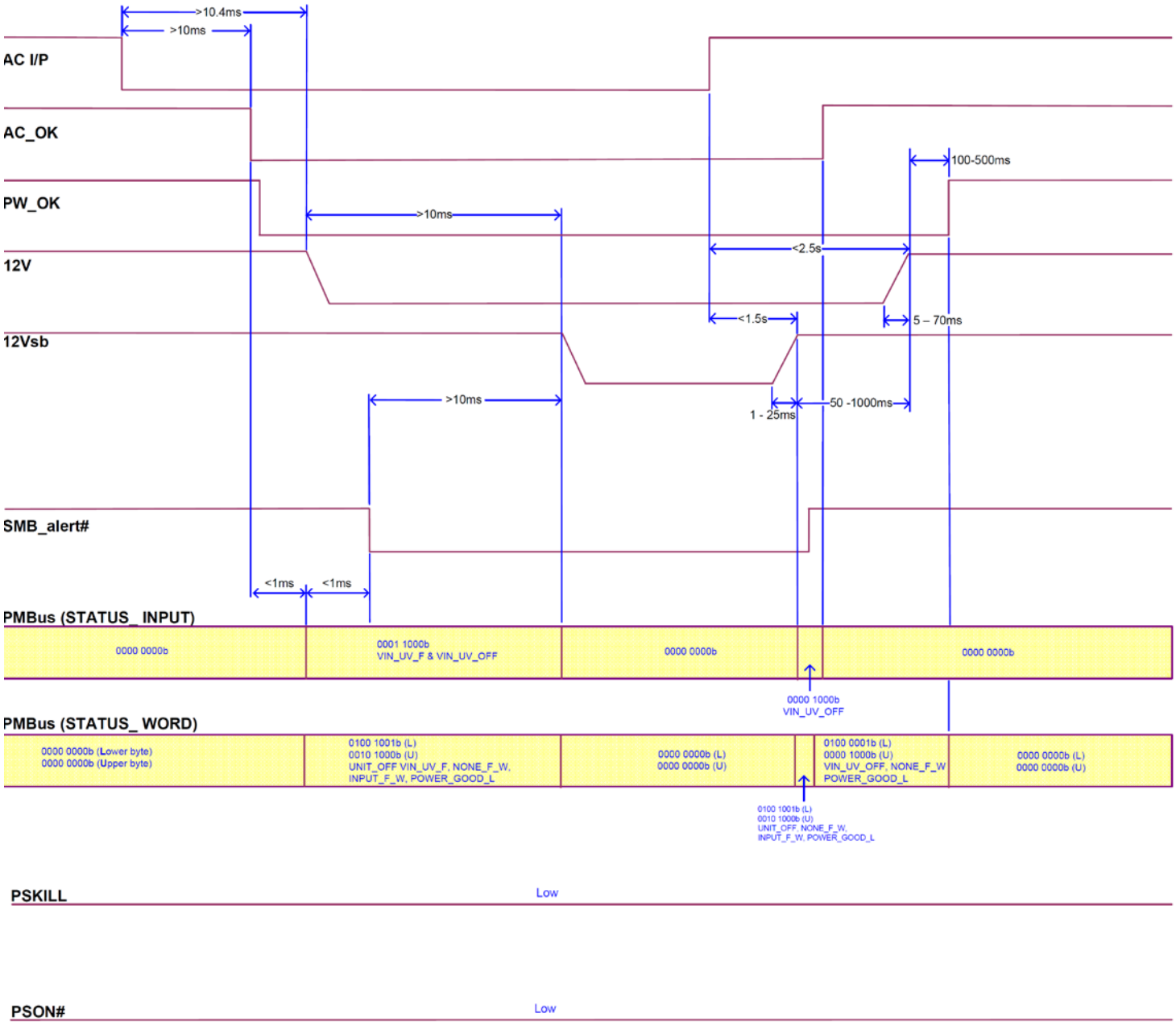

Notes:

1) Shutdown due to clearance of input fuse follows above turn-off sequence however the time intervals may not comply.

2) Loss of AC input to one of the parallel connected PSUs will result AC_OK maintaing a “low” for at least 100ms

TIMING SPECIFICATIONS

AC Removal and Recovery Standby Output On

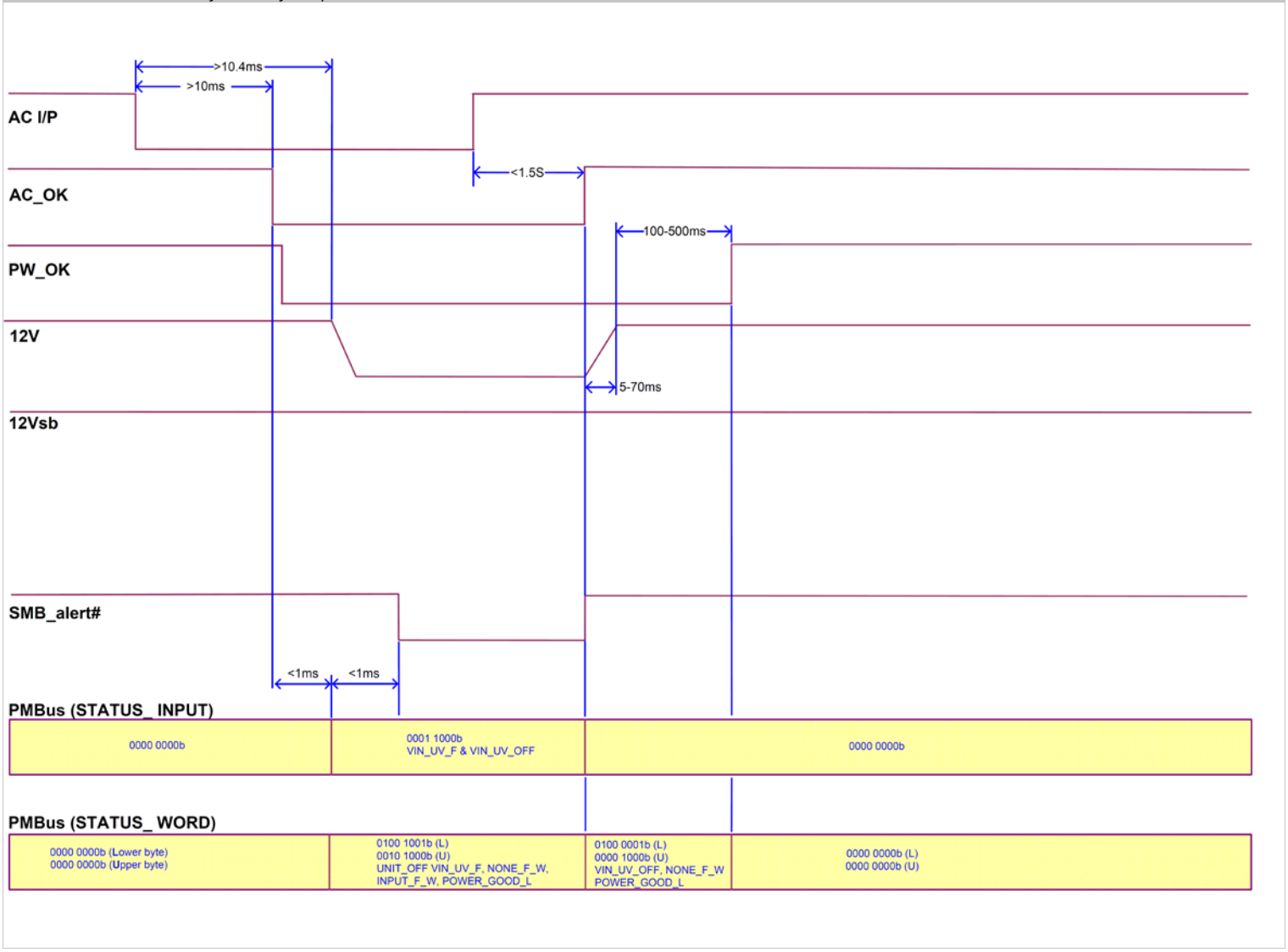

OUTPUT CONNECTOR & SIGNAL INTERFACE

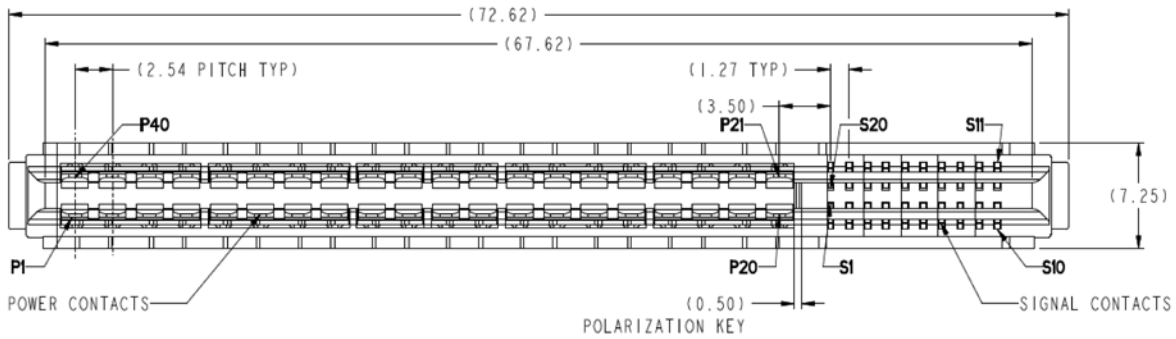

PIN ASSIGNMENTS - Power Module Output & Signal Interface Connector: Card Edge		
Pin	Signal Name	Comments
P1-P10 & P31-P40	PWR Return	+ 12V main and standby return
P11-P20 & P21-30	+12V Main output	+ 12V main output
S1	NC	No Connection
S2	SMB_ALERT	Active Low; I2C alert signal; short MLFB pin; Signal details
S3	12VRS (-)	12V Main output return (-) Remote Sense
S4	PSKILL	Turn on/off PSU; short MLFB pin; Signal details
S5	NC	No Connection
S6	PS_A0	PMBus address line A0; Signal details
S7	SCL	PMBus clock signal; Signal details
S8	AC_OK	Input voltage is within correct range; Signal details
S9, S10	NC	No Connection
S11	PRESENT_L	PS Present; Signal details
S12	Signal Return	Signal return (internally connected to 12V main return)
S13	ISHARE	Current share bus; Signal details
S14	SDA	PMBus Data signal; Signal details
S15	PS_A1	PMBus address A1; Signal details
S16	PW_OK	Power OK; Active high indicates 12V Main is valid; Signal details
S17	PS_ON	Active Low; 12V main on/off control; Signal details
S18	12VRS (+)	12V Main output (+) Remote Sense Signal details
S19, S20	VSB	Standby output
Note: VSB return. Signal return and main 12V return are connected together with the PSU		

MATING CONNECTOR

Part Number	Description
Amphenol (FCI): 10120871-001LF	CONN EDGE DUAL FEMALE 60POS

AC INPUT CONNECTOR

Part Number	Description
IEC320-C14, 10A, 250VAC	

WIRING DIAGRAM

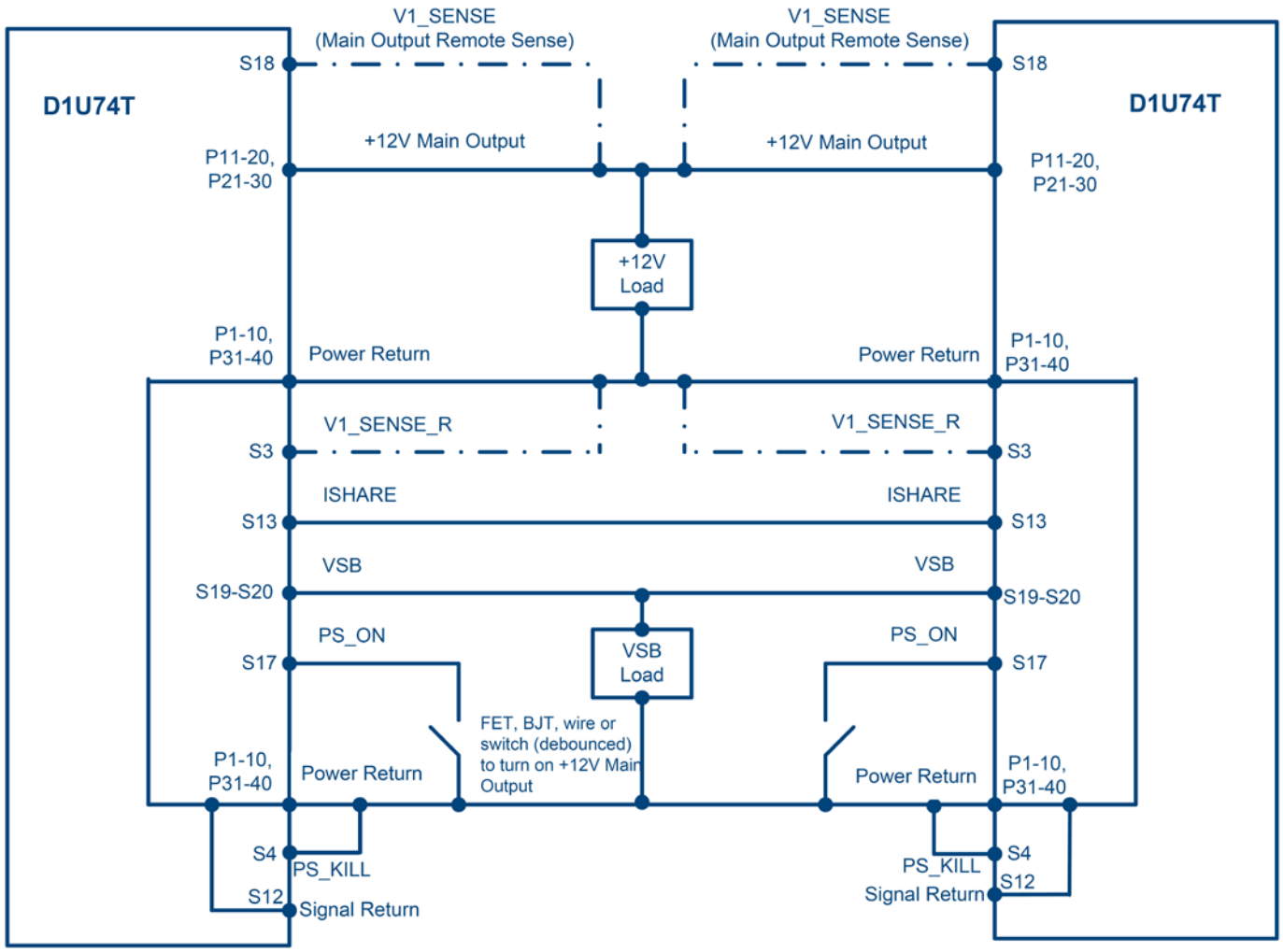

CURRENT SHARING NOTES

1. Main Output: Current sharing is achieved using the active current share method.
2. Current sharing can be achieved with or without the remote (V_SENSE) connected to the common load.
3. The +VSB output has an internal ORING MOSFET for additional redundancy/internal short protection.
4. Startup Load Condition: DC output load current should not exceed the ratings of a single PSU until a minimum of 3 seconds after application of valid AC input.
5. The current sharing pin is connected between sharing units (forming an ISHARE bus). It is an input and/or an output (bi-directional analogue bus) as the voltage on the line controls the current share between sharing units. A power supply will respond to a change in this voltage but a power supply can also change the voltage depending on the load drawn from it. On a single unit the voltage on the pin (and the common ISHARE bus would read 8VDC at 100% load (power module capability). For two units sharing the same load this would read approximately 4VDC for perfect current sharing (i.e. 50% power capability per unit).
6. The load for both the main 12V and the VSB rails at initial startup shall not be allowed to exceed the capability of a single unit. The load can be increased after a delay of 3 sec (minimum), to allow all sharing units to achieve steady state regulation.
7. Refer to additional notes regarding PSU insertion and extraction

MECHANCIAL ENVELOPE

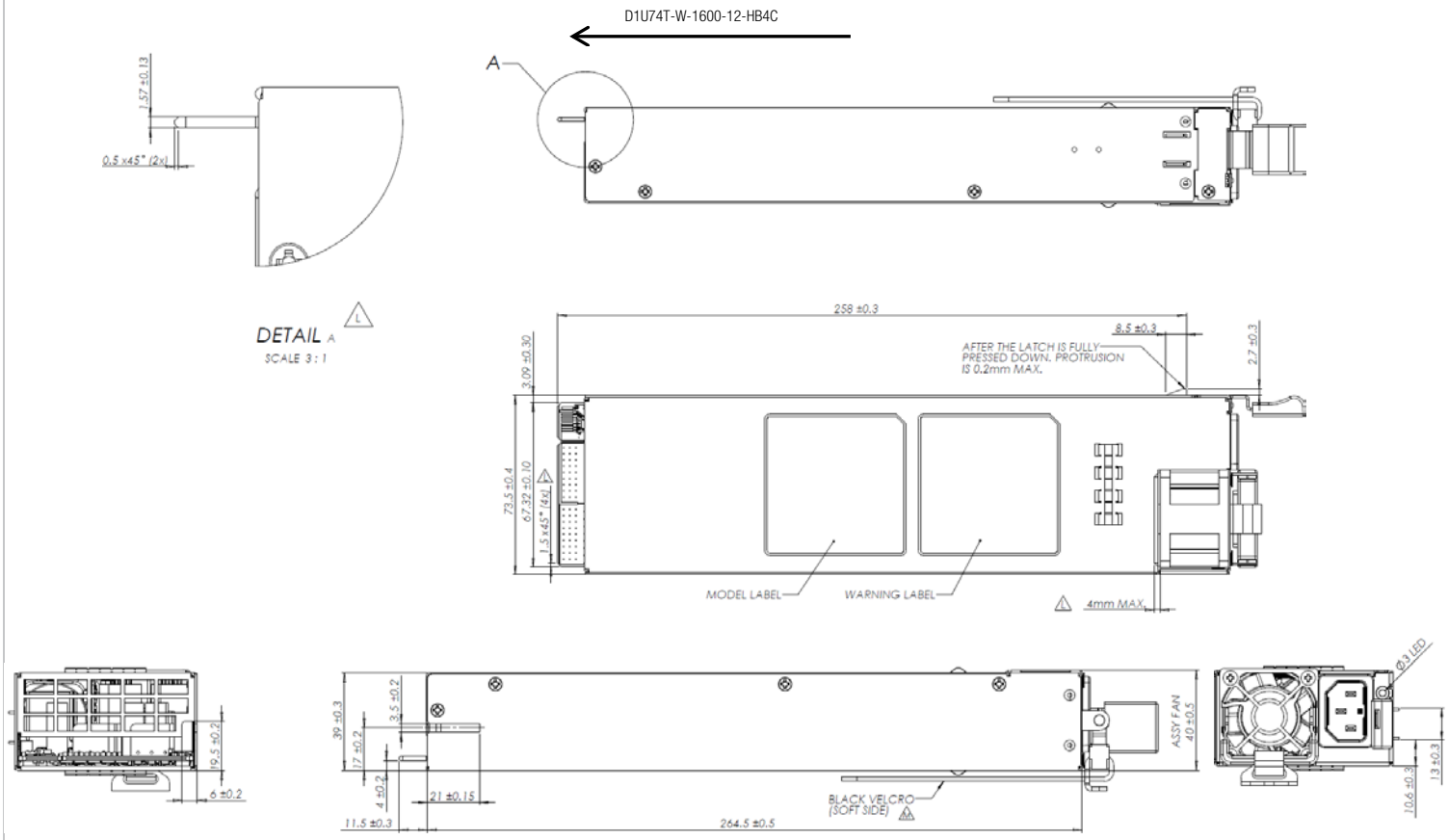

1. AC input connector: IEC 60320-C14
2. This graphical representation of the actual is not to scale.
3. Not all fine details are shown. Please contact Murata for 3D model for details
4. Dimensions in mm,
5. Subject to change. Contact factory for latest version.

OPTIONAL ACCESSORIES

Description	Part Number
Connector Card	D1U74T-12-CONC

APPLICATION NOTES

Document Number	Description	Link
ACAN-93	D1U74T-W-1600-12-HBxC PMBus™ Protocol	http://power.murata.com/datasheet?/data/apnotes/acan-93.pdf
ACAN-94	D1U74T-12-CONC , Output Connector Card	http://power.murata.com/datasheet?/data/apnotes/acan-94.pdf

Murata Power Solutions, Inc.
129 Flanders Rd. Westborough,
Ma 01581, USA.
ISO 9001 and 14001 REGISTERED

This product is subject to the following operating requirements and the Life and Safety Critical Application Sales Policy. Refer to: http://www.murata-ps.com/requirements/

Murata Power Solutions, Inc. ("Murata") makes no representation that the use of its products in the circuits described herein, or the use of other technical information contained herein, will not infringe upon existing or future patent rights. The descriptions contained herein do not imply the granting of licenses to make, use, or sell equipment constructed in accordance therewith. Buyer represents and agrees that it has all the necessary expertise to create and implement safeguards that anticipate dangerous consequences of failures, monitor failures and their consequences, lessen the likelihood of failures that might cause harm, and take appropriate remedial actions. Buyer will fully indemnify Murata, its affiliated companies, and its representatives against any damages arising out of the use of any Murata products in safety-critical applications. Specifications are subject to change without notice.

© 2019 Murata Power Solutions, Inc.