EXCELSYS COOLX®600 SERIES

FANLESS, NATURAL CONVECTION-COOLED MODULAR POWER SUPPLY

Advanced Energy's CoolX®600 series, part of our Excelsys product line, is the world's first fanless, natural convection-cooled modular power supply. The CoolX600 delivers an incredible 600 W without fan-assisted cooling from a very compact package. The CoolX600 offers system designers best-in-class efficiency and reliability in addition to the most comprehensive feature set and specifications available.

PRODUCT HIGHLIGHTS

No Fan Featured
- 600 W with 100% natural convection cooling
- No base plate needed
- No acoustic noise or vibrations

Reliability
- MTBF > 400,000 hours, 25% better than today's leading solutions
- High input surge protection — 4 kV line to PE for harsh environments
- Reverse energy protection — no blocking diodes required
- 24 W always ON auxiliary power output
- Safety approved to 5000 m altitude
- > 94% efficiency
- Five-year warranty

Flexibility
- Analog and digital management — PMBus™ monitoring and control capability
- Field-configurable — plug and play power
- Series and parallel outputs — higher voltages/currents
- Mounting options — base/side and DIN-Rail mounting

TYPICAL APPLICATIONS

Medical
- Clinical diagnostic equipment, medical lasers, dialysis equipment, radiological imaging, clinical chemistry

Industrial
- Test and measurement, industrial machines, automation equipment, printing, telecommunications, audio equipment

Hi Rel
- Harsh industrial electronics, radar (naval- and ground-based), communications, test and measurement

AT A GLANCE

	CX06S	CX06M
Power		
	600 W	600 W
Slots		
	4	4

Cooling

No fan featured, convection-cooled

Parameters

215.9 mm x 114.3 mm x 39.1 mm (8.5 in x 4.5 in x 1 U)

Certifications

Medical
- IEC60601-1 3rd edition, IEC60601-1-2 4th edition (EMC)
- Dual fused

Industrial
- IEC60950, IEC62368-1
- ISO9000
- SEMI F47**

Defense/Aero
- MIL-STD-810G

MODULES

CoolX CoolMods Table				
Single Output Modules (1 Slot)	**Vnom(V)**	**Set Point Adjust Range (V)**	**Imax(A)**	**Power (W)**
CmA[1]	5	2.5-6.0	21.0	105
CmB[1]	12	6.0-15.0[2]	15.0	180
CmC[1]	24	15.0-28.0	8.3	200
CmD[1]	48	28.0-58.0[3]	4.2	200
High Power Modules (3 Slot)				
CmE[4]	24	24-25.2	25.0	550*
CmF[4]	48	48-50.4	12.5	550*
Dual Output Modules (1 Slot)				
CmG[5] V1	24	3.0-30.0	3.0	90
V2	24	3.0-30.0	3.0	90
CmH[6] V1	5	3.0-6.0	6.0	36
V2	24	3.0-30.0	3.0	90
Wide Trim Modules (1 Slot)				
CmA-W01	5	1.0-6.0	21	105
CmB-W01	12	1.0-15.0[2]	15	180
CmC-W01	24	2.0-28.0	8.33	200
CmD-W01	48	3.0-58.0[3]	4.17	200

1 Full dynamic specifications may not be met at full load when output voltage is trimmed above 13 V.

2 Max Trim 14 V when used with High Power Module

3 Max Trim 56 V when used with High Power Module

4 a) Only one High Power module (CmE or CmF) can be used per CoolPac.
b) During load transients starting from 0% load on the High Power modules, other modules in the CoolPac may experience an output voltage dynamic during the load change. Contact applications support for details or support.

5 For the CmG module the max combined power of both outputs is 120 W.

6 For the CmH module the max combined power of both outputs is 100 W.

* Max Power of coolPac is 550W when High Power Module is used

**SEMI F47 compliant at input voltages > 180 VAC. Consult Advanced Energy for details.

ELECTRICAL SPECIFICATIONS

Input					
Parameter	**Conditions/Description**	**Min**	**Nom**	**Max**	**Units**
AC Operating Input Range		85	—	264	VAC
Nominal Input Voltage Range	Universal Input 47-440 Hz	100	—	240	VAC
Extended AC Operating Range	Maximum for 5 seconds	—	—	300	VAC
DC Input Voltage Range		120	—	300	VDC
Input Current	90 VAC @ 420 W	—	6	—	A
Inrush Current	230 VAC @ 600 W	—	—	25	A
Power Factor	120 VAC @ 500 W	0.98	—	—	—
Undervoltage Lockout	Shutdown	65		74	VAC
Input Fuses Rating	Dual Fused (Line and Neutral) 250 VAC	—	8	—	A

ELECTRICAL SPECIFICATIONS (CONTINUED)

Efficiency	230 VAC, 600 W with 3 x CmC CoolMods	—	93	—	%
	230 VAC, 600 W with 1 x CmE CoolMod	—	94	—	%
Output					
Parameter	**Conditions/Description**	**Min**	**Nom**	**Max**	**Units**
Power Rating	CX06: See derating curves	—	—	600	W
Minimum Load		0	—	—	A
Line Regulation	For ±10% change from nominal line	—	—	±0.1	—
	CmF, CmG, CmH	—	—	±0.5	%
Load and Cross Regulation	For 25% to 75% load change	—	—	±0.2	%
Transient Response	For 25% to 75% load change 0.5 A/uS: voltage deviation	—	—	4 (4)	%
	*CmE and CmF, CmG, CmH Figures in () Settling Time	—	—	500 (1000)	µS
Ripple and Noise	100 mV or 1.0% pk-pk. 20 MHz BW	—	—	1	%
	CmF	—	—	1.5	%
Overvoltage Protection	Tracking OVP Level (N/A in CmE and CmF, CmG, CmH)	105	—	125	%
	Latching OVP Level	110	—	160	%
Remote Sense	Max line drop compensation (N/A in CmG and CmH)	—	—	0.5	VDC
Rise Time	Monotonic CmG, CmH Figures in ()	—	—	10 (20)	ms
Turn-On Delay	From AC in *CmE and CmF, CmG, CmH Figures in ()	—	—	800	ms
	From Global Enable	—	—	10 (20)	ms
	From CoolMod Enable	—	—	10 (20)	ms
Hold-Up Time	For nominal output voltages at full load	20	—	—	ms
CoolMod Power	As per CoolMod table	—	—	—	—
Output Adjustment Range	Manual: Multi-turn potentiometer, as per CoolMod table Vtrim: As per CoolMod table	—	—	—	—
Overcurrent Protection	Straight line with hiccup activation @ 35% Vo nom CmE and CmF, CmG, CmH: Current limit hiccup autorecovery	110	130	150	%
Short Circuit Protection	Yes, Autorecovery	—	—	—	—
Over Temperature Protection	Yes, Autorecovery (CmG, CmH latch off)	—	—	—	—
Capacitive Load	Nominal output voltages at full load	—	—	10	mF
	CmG, CmH	—	—	270	uF

Auxiliary Output					
Parameter	**Conditions/Description**	**Min**	**Nom**	**Max**	**Units**
Nominal Output Voltage	Aux voltage option A	11.76	12	12.24	V
	Aux voltage option B	4.75	5	5.25	V
Load Regulation		—	—	±2	%
Line Regulation	For ±10% change from nominal line	—	—	±0.5	%
Maximum Output Current	Aux voltage option A	—	—	1.96	A
	Aux voltage option B	—	—	4.7	A
Maximum Output Capacitive Load		—	—	1000	uF
Output Overcurrent Protection	Hiccup	110		140	%
Short Circuit Protection	Yes, autorecovery	—	—	—	—

ELECTRICAL SPECIFICATIONS (CONTINUED)

Galvanic Isolation					
Parameter	**Conditions/Description**	**Min**	**Nom**	**Max**	**Units**
Input to Output	Reinforced (2 x MOPP); contact Advanced Energy for Hi-Pot instructions	4000	—	—	VAC
Input to Case	Basic (1 x MOPP)	1850	—	—	VAC
Output to Case	Basic (1 x MOPP)	1850	—	—	VAC
Output to Output	Basic (1 x MOPP)	1850	—	—	VAC
Output to Output (Dual)	CmG, CmH V1-V2	500	—	—	VDC

Reliabilty					
Parameter	**Conditions/Description**	**Min**	**Nom**	**Max**	**Units**
Reliability and MTBF	MTBF of > 400 kHours, Telecordia SR-332, Issue 1 CoolMod	—	0.52	—	Fpmh
	CoolPac	—	1.08	—	Fpmh
Warranty	5 years	—	—	—	—

Environmental					
Parameter	**Conditions/Description**	**Min**	**Nom**	**Max**	**Units**
Operating Temperature	Operates to specification below -20°C after 10 min warmup	-40	—	85	°C
Storage Temperature		-40	—	85	°C
Derating	See Derating Curves including note 5	—	—	—	—
Relative Humidity	Non-condensing	5	—	95	%RH
Shock and Vibration	MIL-STD-810G Method 514.6	—	—	—	—
Altitude		—	—	5000	m

Leakage Currents			
Parameter	**Conditions/Description**	**Nom**	**Units**
AC Leakage Current	**Input to Earth Ground**	—	—
Normal Condition (High Line)	Mains Voltage 264 VAC / 60 Hz	248	µA
Single Fault Condition (High Line)	Mains Voltage 264 VAC / 60 Hz	393	µA
Touch Current			
Normal Condition	Mains Voltage 264 VAC / 60 Hz	4.7	µA
Single Fault Condition	Mains Voltage 264 VAC / 60 Hz	247	µA

EMC		
Parameter	**Conditions/Description**	**Units**
Radiated Emissions[1]	EN 55011, EN 55022 and FCC, Class B	Compliant
Conducted Emissions[1]	EN 55011, EN 55022 and FCC, Class B	Compliant
Power Line Harmonics	EN 61000-3-2, Class A	Compliant
Voltage Flicker	EN 61000-3-3	Compliant
ESD	EN 61000-4-2, level 4, 8 kV contact, 15 kV air	A
Radiated Immunity	EN 61000-4-3, level 2, 3 V/m	A
Electrical Fast Transient	EN 61000-4-4, level 4, ±4 kV	B
Surge Immunity	EN 61000-4-5, level 4, 2 kV DM, 4 kV CM	B
Conducted RF Immunity	EN 61000-4-6, level 3, 10 Vemf 150 KHz-80 MHz	A
Power Frequency Magnetic Field	EN 61000-4-8, level 4, 30 A/m	A

[1] Consult AE applications for system level compliance

ELECTRICAL SPECIFICATIONS (CONTINUED)

Standards and Directives	
Parameter	**Conditions/Description**
Safety Agency Approvals	EN60601-1 3rd Edition, UL60601-1, CSA601
	EN60950 2nd Edition, CSA C22.2 No. 60950-1
IEC/EN 60950-1, Edition 2 and All National Deviations	UL 60950-1/CSA 22.2 No 60950-1, Edition 2
	5000 m (16,400 ft) altitude, 100 V to 240 ±10% VAC
IEC/EN 60601-1, Edition 3 and All National Deviations	IEC 60601-1(2005), EN60601-1 (2006)
	ANSI/AAMI ES 60601-1 (2005)
	CAN/CSA C22.2 No. 60601-1 (2008)
	5,000 m (16,400 ft) altitude, 100 V to 240 VAC ±10%
IEC 62368 Edition 2	IEC 62368-1 (2014) Edition 2
	5000 m (16,400 ft) altitude, 100 V to 240 ±10% VAC
IEC 60601-1-2 Edition 4	IEC 60601-1-2 (2014)
Protection Class	Class I
WEEE	Waste Electrical and Electronic Equipment Directive (WEEE) 2002/96/EC
ROHS	EU DIRECTIVE 2011/65/EC RoHS compliancy
REACH	Compliant

MECHANICAL SPECIFICATIONS

Mechanica Data		
Parameter	**Description**	**Min**
Dimensions (L x W x H)		215.9 mm x 114.3 mm x 39.1 mm (8.5 in x 4.5 in x 1 U)
Weight	Nominal Weight: CoolPac + 4 x CoolMods	1 Kg
Connectors	**Description**	**Mating Connectors (if applicable)**
AC/DC input terminal block	TE 2-1437667-S, DINKLE DT-35-B07W-03	—
AC/DC IEC input (Option)	IEC 320 Inlet	—
Main DC output terminal block (CmA-CmF, CmM-CmQ)	M4 Screws	—
Main DC output terminal block (CmG, CmH)	Camden - CTB9350/4A	—
Output Signal Connector (CmG, CmH)	Molex - 87833-0831	—
System Signal Connector J1005	Molex 87833-0831 8-way	Locking Molex 51110-0860; Non Locking Molex 51110-0850; Crimp Terminal: Molex p/n 50394 or Molex 51110-0856 which includes locking tab and polarization keying
Output Signal Connectors J1001-1004	Molex 87833-0631 6-way	Locking Molex 51110-0660; Non Locking Molex 51110-0650; Crimp Terminal: Molex p/n 50394 or Molex 51110-0656 which includes locking tab and polarization keying
Output Sense Connectors J3	JST-S2BPH-K(LF)(SN)	JST PHR2. Crimp Terminal JST BPH-002T-P.0.5S or SPH-002T-P.05S
Auxiliary Output Connector J1	Molex 1041880210 2pin	—

Mechanical Drawings

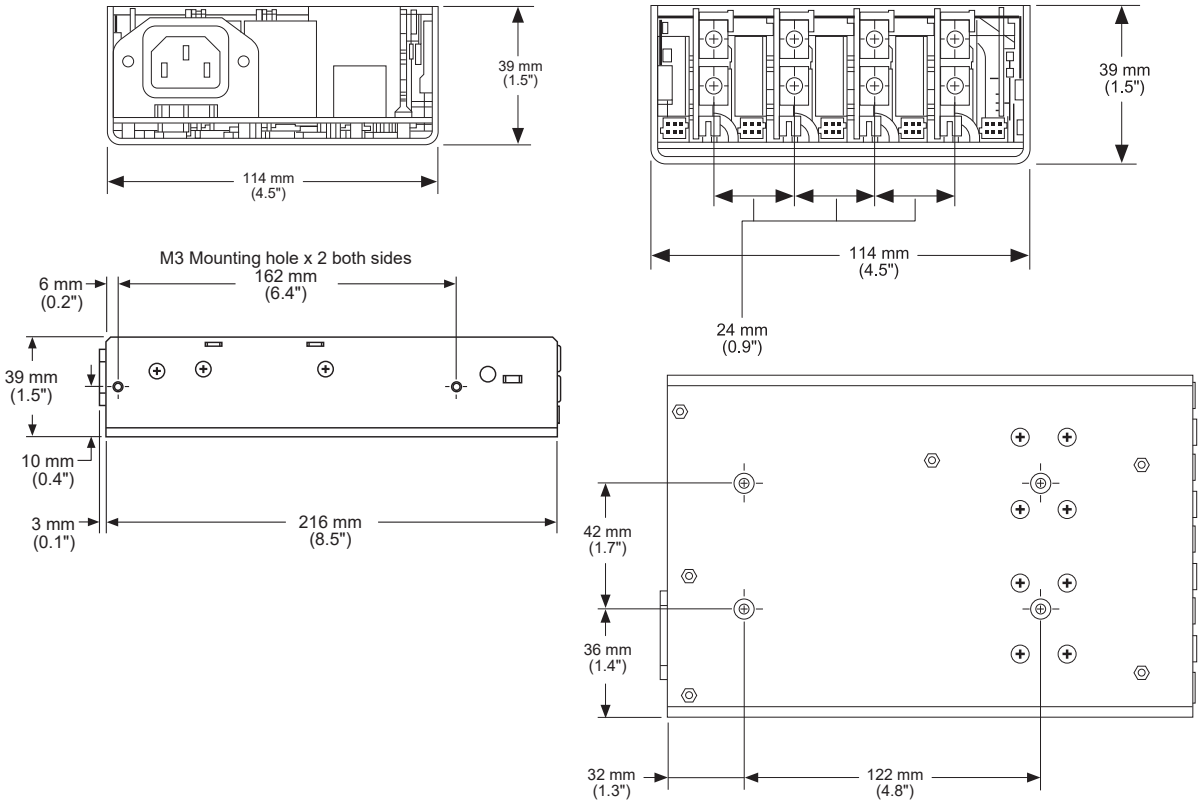

CoolX can be mounted on its base, vertically, or on its side. CoolX can also be mounted on the DIN Rail Accessory (Z744).

INTERFACE

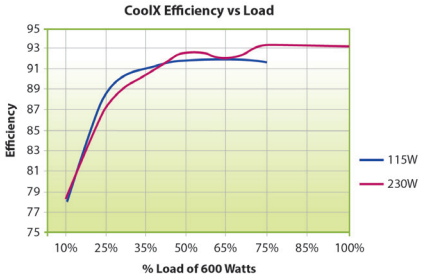

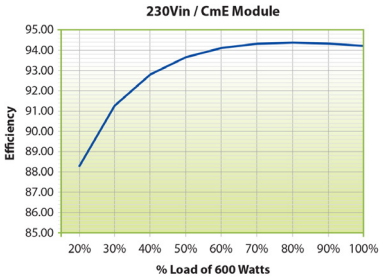

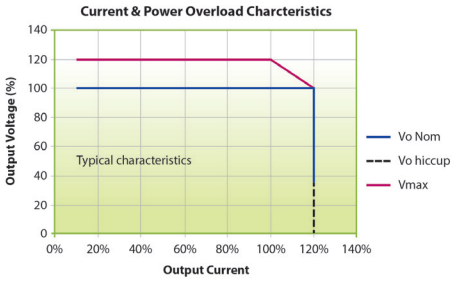

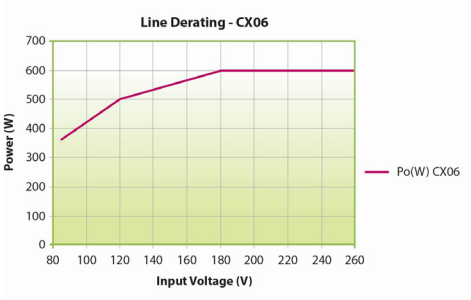

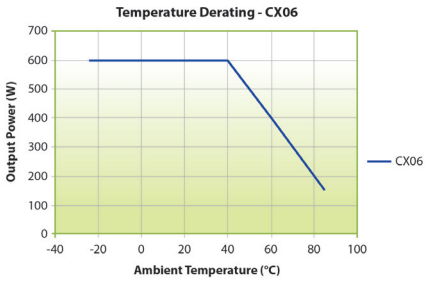

[1] Enhanced thermal performance with system fans and base plate cooling. Contact Advanced Energy for details.

Input Connectors

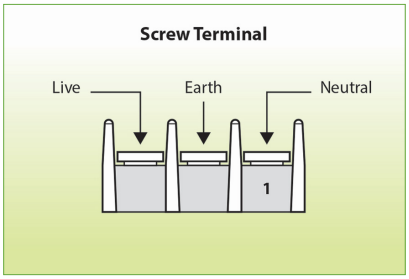

Standard (Screw Terminal)

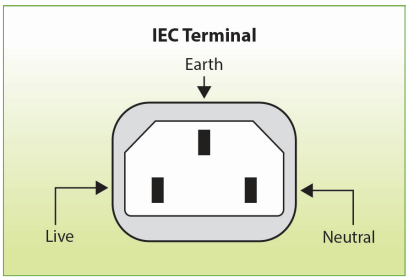

Option 1 (IEC Terminal)

CoolPac Connectors

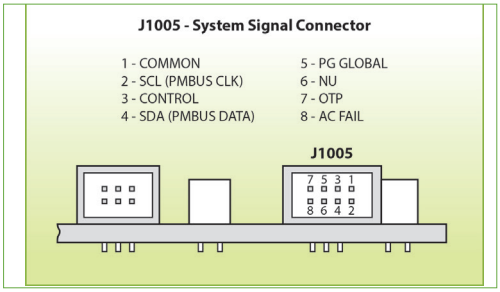

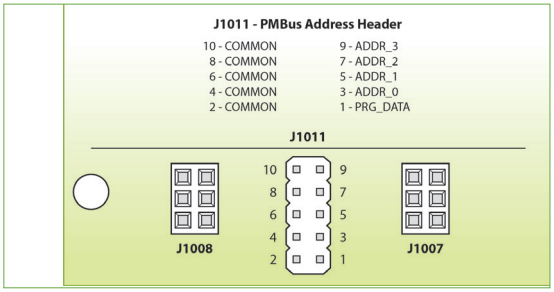

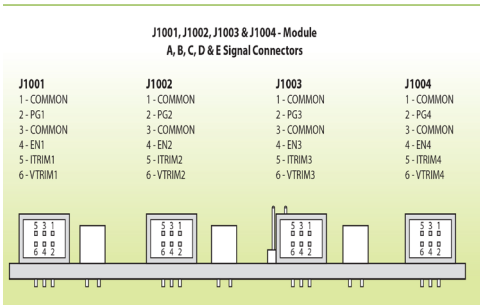

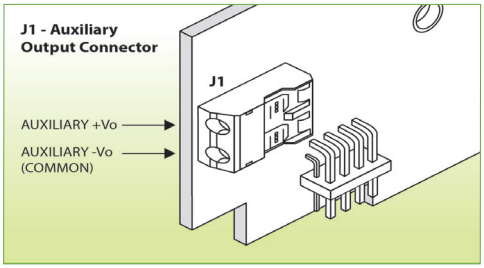

INTERFACE (CONTINUED)

CoolMod Connectors

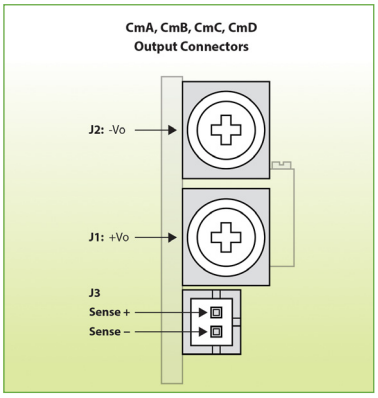

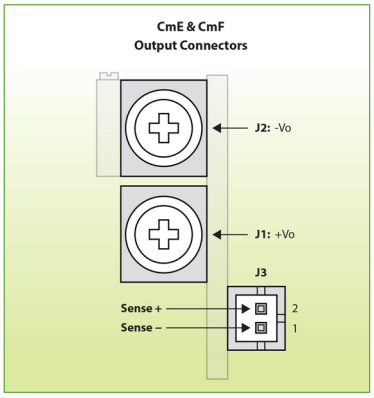

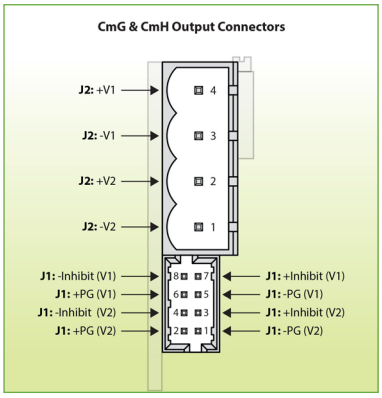

CONFIGURATION

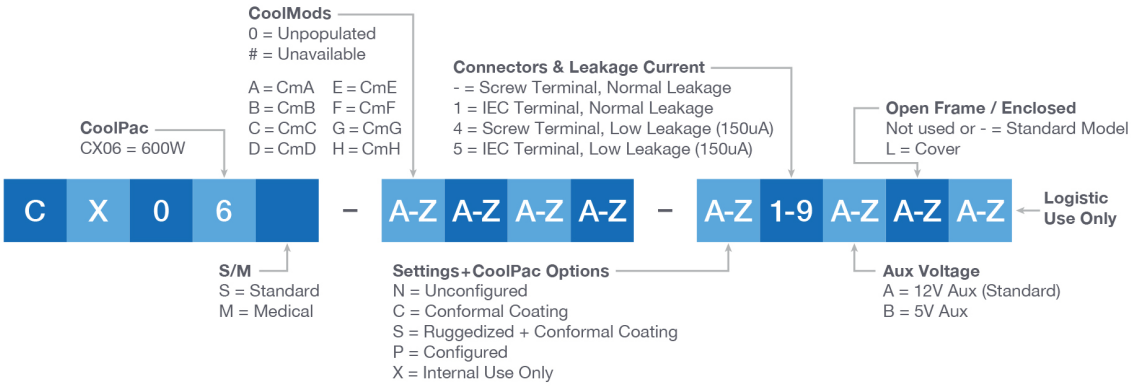

-= Standard indicates that all voltages are set to the nominal setpoint of each module and there are no parallel/series links fitted to the power supply

*CmE or CmF High Power Module (3 slot module) can only occupy Slots B/C/D.

ABOUT ADVANCED ENERGY

Advanced Energy (AE) has devoted more than three decades to perfecting power for its global customers. AE designs and manufactures highly engineered, precision power conversion, measurement and control solutions for mission-critical applications and processes.

AE's power solutions enable customer innovation in complex semiconductor and industrial thin film plasma manufacturing processes, demanding high and low voltage applications, and temperature-critical thermal processes.

With deep applications know-how and responsive service and support across the globe, AE builds collaborative partnerships to meet rapid technological developments, propel growth for its customers and power the future of technology.

PRECISION | POWER | PERFORMANCE

Advanced Energy

For international contact information, visit advancedenergy.com

Specifications are subject to change without notice. Not responsible for errors or omissions. ©2019 Advanced Energy Industries, Inc. All rights reserved. Advanced Energy® and AE® are U.S. trademarks, and CoolX® is a U.S. and European trademark of Advanced Energy Industries, Inc.

ENG-LV-COOLX600-235-07 11.30.21