High Reliability Thick Film Chip Resistors

CR Series

Features:

- CR0805 & 1206 available to EN140401 & IECQ-CECC40401 release
- 100% high temperature and overload screened versions available
- Terminations available for wire bonding or soldering
- Gold planar types are non-magnetic
- Resistance range 1R0 to 100M
- Tolerances down to 0.1%
- Zero-ohm links available

All Pb-free parts comply with EU Directive 2011/65/EU amended by (EU) 2015/863 (RoHS3)

Electrical Data

CR Actual Data		CR0503	CR0603	CR0805	CR1005	CR1206	CR2010	CR2512
Power rating at 70°C	W	0.063	0.1	0.125		0.25	0.5	1
Resistance range	Ω	1R0 – 10M		1R0 – 100M			1R0 – 1M0	
Limiting element voltage	V	50	75	150		200	400	500
TCR -55 to +155°C	ppm/°C	<10R: 200, 10R-1M0: 100, >1M0:250						
Resistance tolerance [1]	%	0.1, 0.25, 0.5, 1, 2, 5						
Ambient temperature range	°C	-55 to +155						
Values [2]		E24 & E96 preferred						
Thermal impedance	°C/W	800	550	360	290	200	80	70
Zero-ohm rating	A	-	1	1.5	-	2	3	
Zero-ohm residual resistance	mΩ	-	<20		-	<20		

Note 1: See table of value ranges. Note 2: Non-standard values may be requested. Note 3: Anti-sulphur versions available – consult factory.

The requirements of the following standards are met or exceeded by the corresponding CR products above.

EN140401-802 Requirements		RR2012M	RR3216M
Required power rating at 70°C	W	0.125	0.25
Qualified resistance range	Ω	1R5 – 10M	1R5 – 10M
Required limiting element voltage	V	150	200
Required TCR -55 to +125°C	ppm/°C	<10R: 200, 10R-1M0: 100, >1M0:200	
Required resistance tolerance	%	<10R: 5, 10R–1M0: 1, 2, 5, >1M0: 5	
Required ambient temperature range	°C	-55 to +125	-55 to +125

IECQ-CECC 40401-004 Requirements		CR0805	CR1206
Required power rating at 70°C	W	0.125	0.25
Qualified resistance range	Ω	1R0 – 10M	1R0 – 10M
Required limiting element voltage	V	100	200
Required TCR -55 to +125°C	ppm/°C	<10R: 200, 10R-1M0: 100, >1M0:200	
Required resistance tolerance	%	1, 2, 5	1, 2, 5
Required ambient temperature range	°C	-55 to +125	-55 to +125

IECQ-CECC 40401-008 Requirements		CR0805	CR1206
Required power rating at 70°C	W	0.125	0.25
Qualified resistance range	Ω	1R0 – 10M	1R0 – 10M
Required limiting element voltage	V	100	200
Required TCR -55 to +155°C	ppm/°C	<10R: 200, 10R-1M0: 100, >1M0:250	
Required resistance tolerance	%	0.1, 0.25, 0.5, 1, 2, 5	
Required ambient temperature range	°C	-55 to +155	-55 to +155

IECQ-CECC 40401-003 Requirements		CR0805	CR1206
Required power rating at 70°C	W	0.063	0.125
Qualified resistance range	Ω	1R0 – 3M0	1R0 – 5M0
Required limiting element voltage	V	100	200
Required TCR -55 to +125°C	ppm/°C	<5R0: 500, 5R0-10R: 350, 10R-3M0: 100, >3M0:250	
Required resistance tolerance	%	0.5, 1, 2, 5	0.5, 1, 2, 5
Required ambient temperature range	°C	-55 to +125	-55 to +125

© TT Electronics plc

High Reliability Thick Film Chip Resistors

CR Series

Physical Data

Dimensions in mm and weight in mg							
	L	W	T max.	A	B[1] min.	C	Wt. nom.
0503G	1.25±0.1	0.63±.1	0.5	-	-	0.2±0.1	1.5
0603F	1.6±0.1	0.8±0.1	0.55	0.3±0.15	0.6	-	2.2
0603G				-	-	0.3±0.15	
0805F	2.0±0.15	1.25±0.15	0.6	0.3±0.15	0.9	-	4.7
0805G				-	-	0.3±0.1	
1005G	2.5±0.2	1.25±0.2	0.7	-	-	0.4±0.15	6.5
1206F	3.2±0.2	1.6±0.2		0.4±0.2	1.7	-	8.5
1206G				-	-	0.4±0.15	
2010F	5.1±0.3	2.5±0.2	0.8	0.6±0.3	3	-	36
2010G				-	-	0.6±0.25	
2512F	6.5±0.3	3.2±0.2		0.6±0.3	4.4	-	55
2512G				-	-	0.6±0.25	

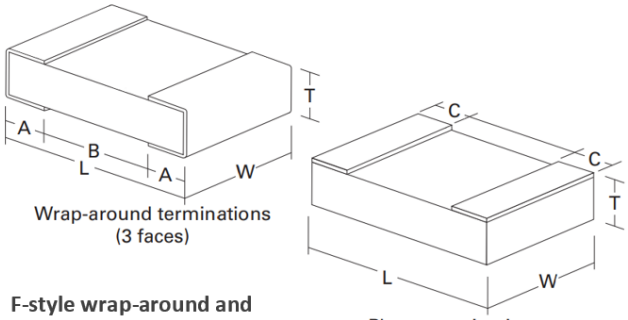

F-style wrap-around and G-style planar termination options.

Note 1: This dimension determines the number of conductors which may pass under the surface mounted device.

Construction

Thick film resistor material, overglaze and organic protection are screen printed on a 96% alumina substrate.

Terminations

Planar (or single-sided) termination is gold and suitable for wire-bonding. Wrap-around termination is suitable for soldering.

Solderability

Wrap-around terminations have an electroplated nickel barrier and a 100% Sn or SnPb coating. This ensures excellent leach resistance properties and solderability. They will withstand immersion in solder at 260°C for 30 seconds.

Marking

All relevant information is recorded on the primary package or reel.

Performance Data

		EN140401-802 Requirements	IECQ-CECC 40401-008 Requirements	IECQ-CECC 40401-004 Requirements	IECQ-CECC 40401-003 Requirements	Actual Performance	
						Maximum [2]	Typical
Load at rated power: P_r for 1000 hours at 70°C	±ΔR%	1 [3]	2 [2]	2 [4]	≤3M3: 2 [4] >3M3: 3 [4]	1	0.25
Dry heat: No load, 1000 hours at 155°C	±ΔR%	1 [3]	2 [2]	1 [3]	≤3M3: 2 [4] >3M3: 3 [4]	≤10M: 1 >10M: 2	≤10M: 0.2 >10M: 1
Shelf-life test: 12 months at room temperature	±ΔR%	Not specified				0.1	0.02
Derating from rated power at 70°C		Zero @125°C	Zero @155°C	Zero @125°C	Zero @125°C	Zero @155°C	
Short term overload: Lesser of 6.25xP_r or 2.5xLEV for 2s	±ΔR%	0.25 [3]	0805: 1 [3] 1206: 0.5 [3]	0.5 [3]	2 [4]	1 [1]	0.1
Long term damp heat	±ΔR%	1 [3]	2 [2]	2 [4]	2 [4]	1	0.25
Temperature rapid change	±ΔR%	0.25 [3]	0.5 [3]	0.5 [3]	1 [4]	0.25	0.05
Resistance to solder heat	±ΔR%	0.25 [3]	0.5 [3]	0.5 [3]	2 [4]	0.25	0.05
Voltage proof	V	0805: 284 1206: 426	0805: 213 1206: 284	0805: 284 1206: 426	0805: 142 1206: 284	0503: 100, 0603: 300 0805, 1206: 500 2010: 568, 2512: 710	

Note 1: All values within the qualified resistance range meet EN140401 and IECQ-CECC40401 requirements.
Note 2: Apply an ohmic addition of R01.
Note 3: Apply an ohmic addition of R05.
Note 4: Apply an ohmic addition of R10.

General Note
TT Electronics reserves the right to make changes in product specification without notice or liability.
All information is subject to TT Electronics' own data and is considered accurate at time of going to print.

© TT Electronics plc

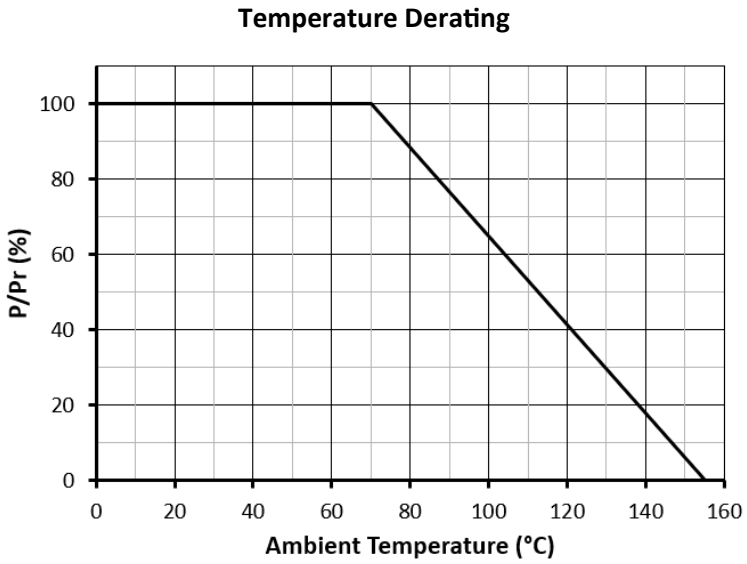

Value Ranges

	Tolerance %					
Size	**5**	**2**	**1**	**0.5**	**0.25**	**0.1**
0503	1R0 – 10M		10R – 10M	100R – 1M0	-	
0603			1R0 – 10M			
0805	1R0 – 100M	1R0 – 50M	1R0 – 20M	10R – 10M	100R – 1M0	
1005						
1206			1R0 – 25M			
2010	1R0 – 1M0					-
2512						

Application Notes

Operating Temperature Range

The chips themselves can operate at a maximum temperature of 155°C (see performance claims above). For soldered chips, the joint temperature should not exceed 110°C. This condition is met when the stated power levels at 70°C are used.

Mounting

This chip resistor is ideally suited for handling by automatic methods due to its rectangular shape and the small dimensional tolerances. Electrical connection to a ceramic substrate or to a printed circuit board can be made by wire bonding (e.g. suffix 'G' in CR0805G) or by reflow soldering of wrap-around terminations (e.g. suffix 'F' in CR0805F). The 'F' terminations provide good leach properties and ensure reliable contact. Due to the robust construction the resistor chip can be immersed in the solder bath for 30 seconds at 260°C. This enables the resistor to be mounted on one side of a printed circuit board and other wire-leaded components on the other side.

Packaging

Solderable wraparound chips are supplied in plastic tape and reeled to IEC 286-3. The 2512 size is packed at 4mm pitch on 12mm wide tape, and the smaller sizes are on 8mm wide tape. Other dimensions conform to:
https://www.ttelectronics.com/TTElectronics/media/ProductFiles/ApplicationNotes/PS003-Packing-of-Specialist-Chip-Resistors.pdf

Gold pad planar chips are supplied in waffle packs.

© TT Electronics plc

Ordering Procedure

Examples: CR2512F-10KFI (2512, solderable wraparound terminations, 10 kilohms ±1%, Pb-free)
CR0805F-150RFIEN (EN140401-802 release, 0805, solderable wraparound terminations, 150 ohms ±1%, Pb-free)

C	R	2	5	1	2	F	-	1	0	K		F	I			
C	R	0	8	0	5	F	-	1	5	0	R	F	I		E	N
1	2					3		4				5	6		7	

1	2	3			4	5	6			7
Type	**Size**	**Termination**			**Value**	**Tolerance**	**Termination Finish & Packing**			**Release**
CR	0503	F	0603, 0805, 1206, 2010, 2512	Solderable wraparound	E24 or E96 3/4 characters R = ohms K = kilohms M = megohms	B = ±0.1%	Pb-free solderable (RoHS)			Omit for commercial or CECC [1, 2]
	0603					C = ±0.25%	I	0603F	Std 2000 (max 5000)/reel	
	0805					D = ±0.5%	I	0805F, 1206F, 2010F	Std 800 (max 3000)/reel	
	1005					F = ±1%	I	2512F	Std 800 (max 1800)/reel	EN = EN140401-802 [2]
	1206					G = ±2%	SnPb solderable			
	2010	G	All	Gold planar		J = ±5%	PB	0603F	Std 2000 (max 5000)/reel	
	2512				R005J = Zero-ohm jumper		PB	0805F, 1206F, 2010F	Std 800 (max 3000)/reel	
							PB	2512F	Std 800 (max 1800)/reel	
							Gold planar			
							I	xxxxG	Waffle pack	

Note 1: For IECQ-CECC released product follow the MPN with text indicating the relevant release. Note this additional text does not form part of our MPN.
Example: **CR1206F-10KFI** IECQ-CECC40401-008
Note 2: IECQ-CECC and EN release is only available for F-style terminated products.

© TT Electronics plc