CUI Devices is now Same Sky! Learn More

SERIES: CPI-4929C-120 | DESCRIPTION: PIEZO BUZZER INDICATOR

FEATURES

- includes driving circuit
- washable
- 104 dB SPL

RoHS

SPECIFICATIONS

parameter	conditions/description	min	typ	max	units
rated voltage			12		Vdc
operating voltage		5		13	Vdc
current consumption	at rated voltage			60	mA
rated frequency		2,000	2,500	3,000	Hz
sound pressure level	at 30 cm, rated voltage	104			dB
dimensions	Ø49.1 x 28.9				mm
weight				27.5	g
material	ABS UL94 1/16" HB High Heat				
terminal	pin type (Sn plating)				
operating temperature		-30		85	°C
storage temperature		-40		95	°C
RoHS	yes				

Notes: 1. All specifications measured at 5~35°C, humidity at 45~85%, under 86~106 kPa pressure, unless otherwise noted.

SOLDERABILITY

parameter	conditions/description	min	typ	max	units
hand soldering	for maximum 5 seconds	330		380	°C

MECHANICAL DRAWING

units: mm
tolerance: ±0.5 mm

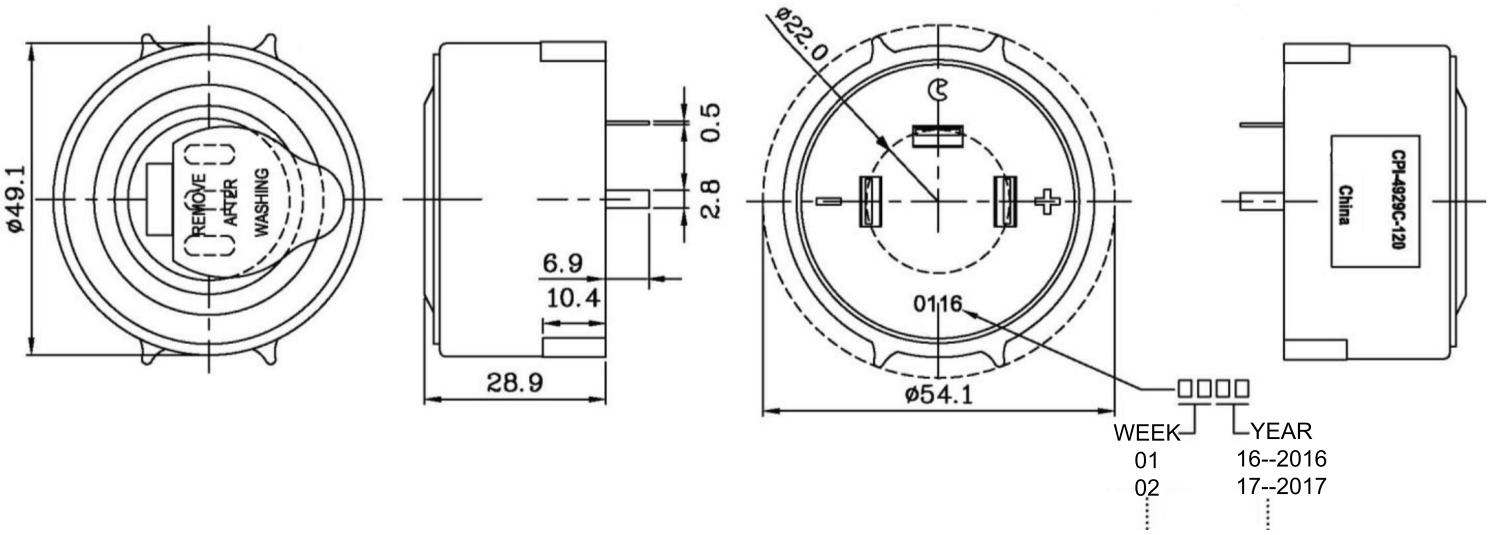

PERFORMANCE CURVES

P: Voltage vs. Sound Pressure Level
I: Voltage vs. Current Consumption

at 30 cm

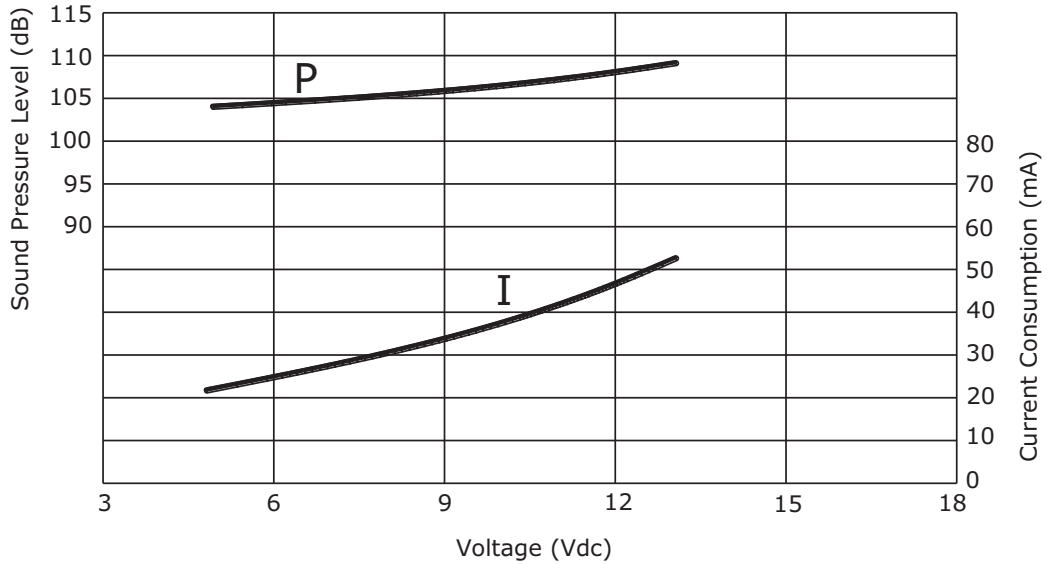

PACKAGING

units: mm

Outer Box Size: 310 x 248 x 49 mm
Carton Size: 550 x 330 x 290 mm
Outer Box QTY: 28 pcs per outer box
Carton QTY: 280 pcs per carton

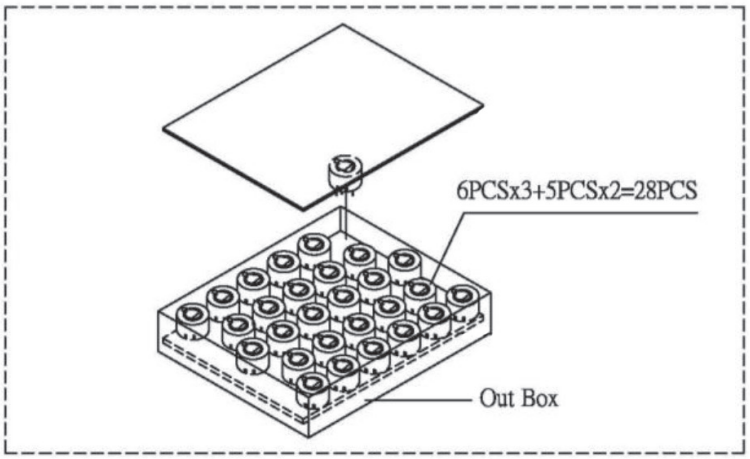

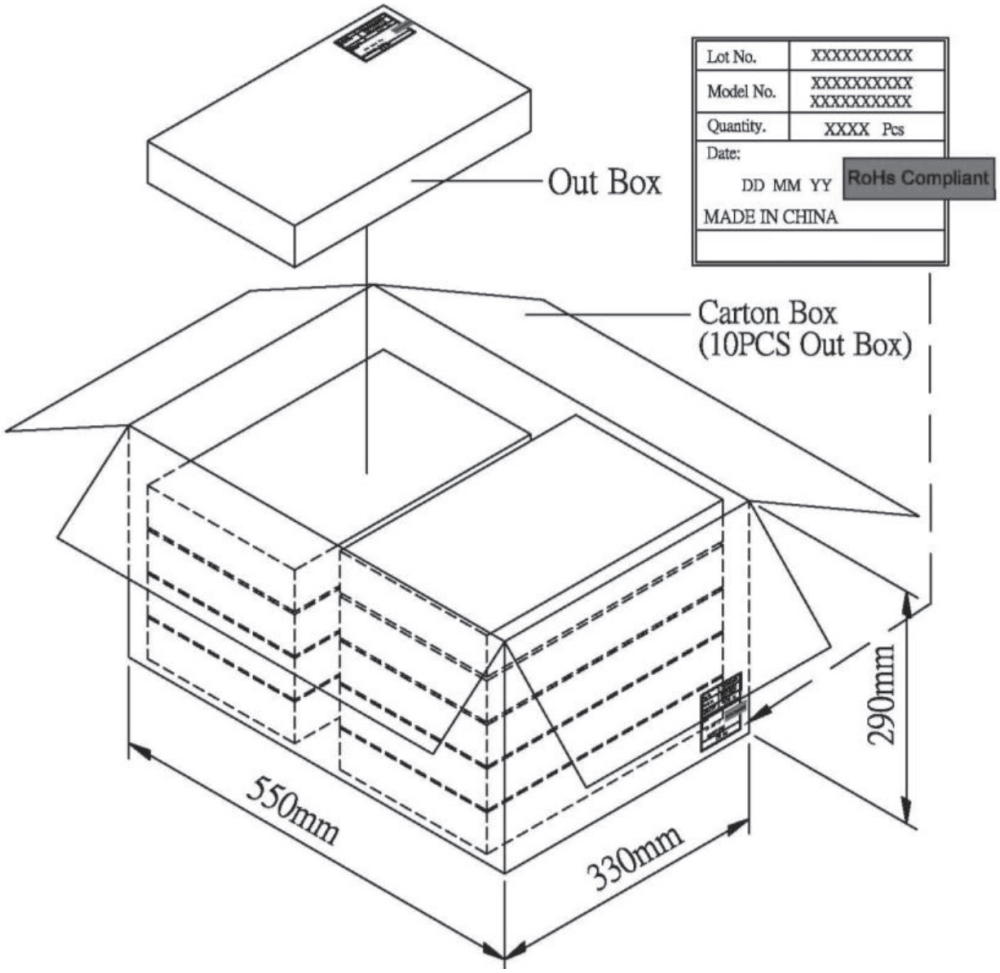

REVISION HISTORY

rev.	description	date
1.0	initial release	03/31/2016
1.01	brand update	12/11/2019
1.02	logo, datasheet style update	08/05/2022
1.03	CUI Devices rebranded to Same Sky	09/11/2024

The revision history provided is for informational purposes only and is believed to be accurate.

Same Sky offers a one (1) year limited warranty. Complete warranty information is listed on our website.

Same Sky reserves the right to make changes to the product at any time without notice. Information provided by Same Sky is believed to be accurate and reliable. However, no responsibility is assumed by Same Sky for its use, nor for any infringements of patents or other rights of third parties which may result from its use.

Same Sky products are not authorized or warranted for use as critical components in equipment that requires an extremely high level of reliability. A critical component is any component of a life support device or system whose failure to perform can be reasonably expected to cause the failure of the life support device or system, or to affect its safety or effectiveness.