CUI Devices is now Same Sky! Learn More

MODEL: CPI-4232-72SST | DESCRIPTION: PIEZO BUZZER INDICATOR

FEATURES

- internal drive
- slow pulse tone
- screw terminals

SPECIFICATIONS

parameter	conditions/description	min	typ	max	units
rated voltage			12		Vdc
operating voltage		8		28	Vdc
current consumption	at 8 Vdc at 12 Vdc at 28 Vdc			3 6 30	mA mA mA
rated frequency		2,300	2,800	3,300	Hz
sound pressure level	at 60 cm, 8 Vdc at 60 cm, 12 Vdc at 60 cm, 28 Vdc	68 72 80			dB dB dB
tone	slow pulse at rated voltage (1.2 ±20% Hz)				
dimensions	Ø42.5 x 32.0				mm
weight				37.9	g
material	NYLON (UL94V-0)				
terminal	screw terminals (tin plating)				
operating temperature		-30		85	°C
storage temperature		-40		85	°C
washable	no				
RoHS	yes				

Notes: 1. All specifications measured at 5~35°C, humidity at 45~85%, under 86~106 kPa pressure, unless otherwise noted.

SOLDERABILITY

parameter	conditions/description	min	typ	max	units
hand soldering	maximum 2 seconds	330		380	°C

MECHANICAL DRAWING

units: mm
tolerance: ±0.5 mm

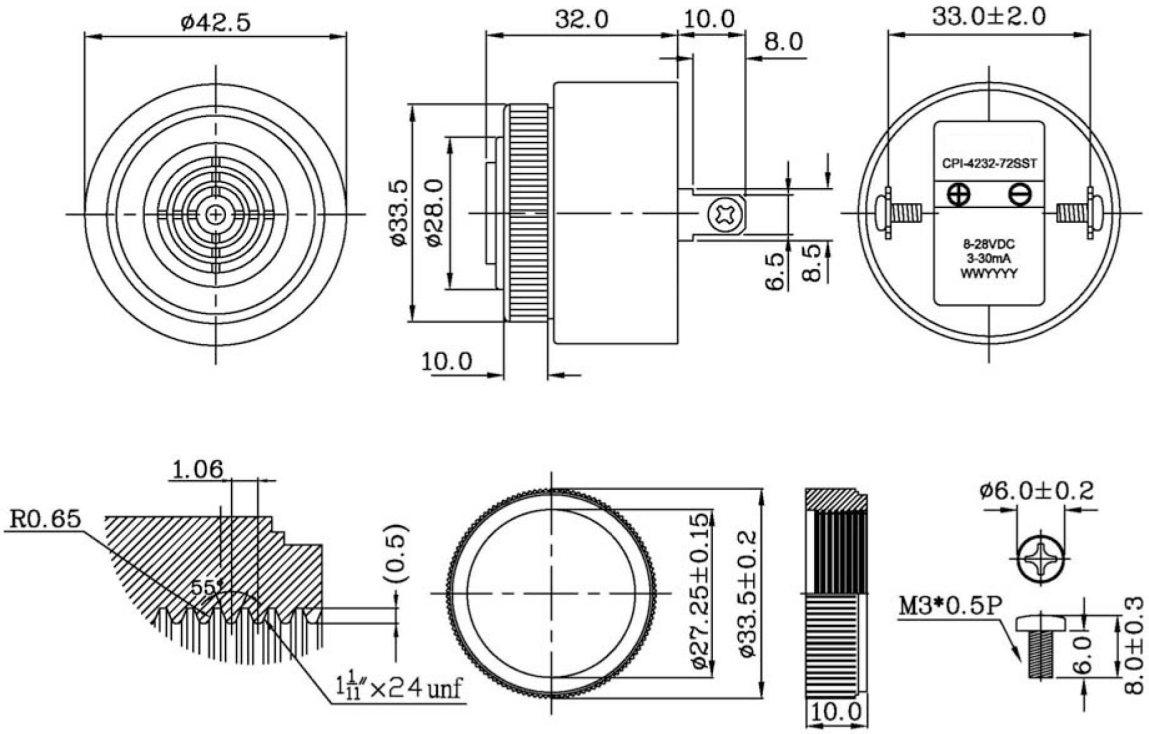

PERFORMANCE CURVES

Voltage vs. Sound Pressure Level at 60 cm

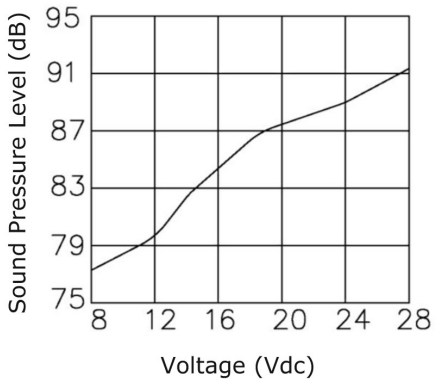

Voltage vs. Current Consumption

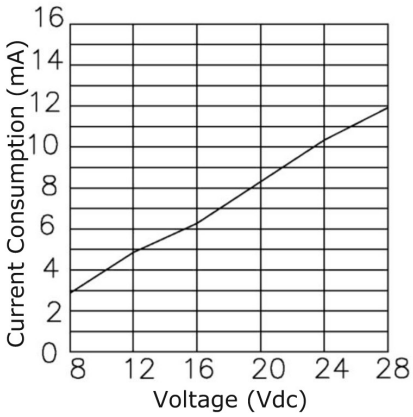

PACKAGING

units: mm

Carton Size: 550 x 330 x 290 mm
Carton QTY: 400 pcs per carton

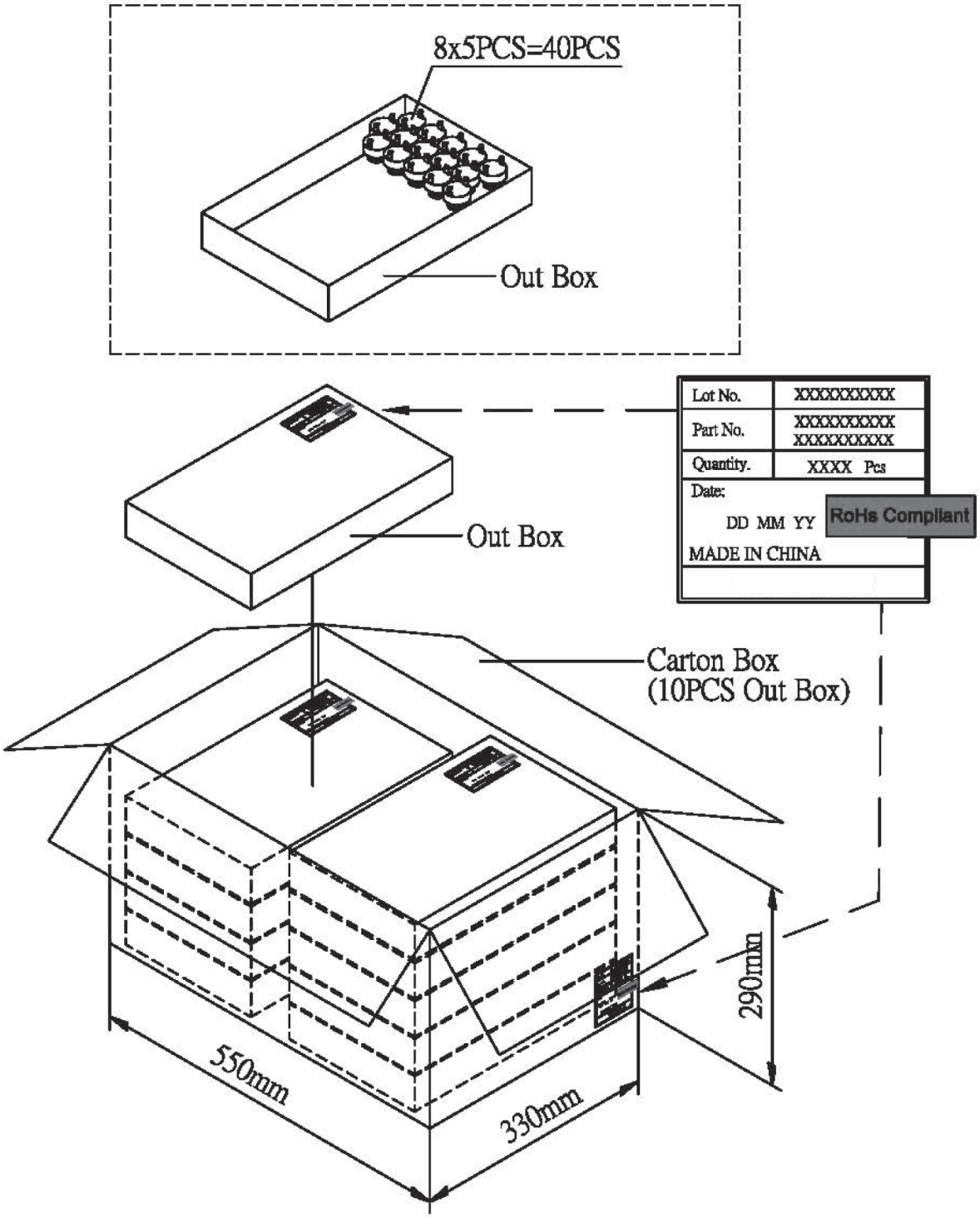

REVISION HISTORY

rev.	description	date
1.0	initial release	12/12/2019
1.01	logo, datasheet style update	08/05/2022
1.02	CUI Devices rebranded to Same Sky	09/11/2024

The revision history provided is for informational purposes only and is believed to be accurate.

Same Sky offers a one (1) year limited warranty. Complete warranty information is listed on our website.

Same Sky reserves the right to make changes to the product at any time without notice. Information provided by Same Sky is believed to be accurate and reliable. However, no responsibility is assumed by Same Sky for its use, nor for any infringements of patents or other rights of third parties which may result from its use.

Same Sky products are not authorized or warranted for use as critical components in equipment that requires an extremely high level of reliability. A critical component is any component of a life support device or system whose failure to perform can be reasonably expected to cause the failure of the life support device or system, or to affect its safety or effectiveness.