CUI Devices is now Same Sky! Learn More

MODEL: CMSM-2313-18 | DESCRIPTION: SPEAKER

FEATURES

- compatible with IEC 60601 applications
- 4 harmonic peaks within ± 15 dB from 1~4 kHz
- 97 dB @ 1 W/0.1 m

RoHS

SPECIFICATIONS

parameter	conditions/description	min	typ	max	units
input power	max power: IEC-60268-5, filter 60 s on/120 s off, 10 cycles at room temp		1.0	1.5	W
impedance	at 2.5 kHz	6.8	8	9.2	Ω
resonant frequency (Fo)	square wave signal		325		Hz
frequency response		Fo		20,000	Hz
sound pressure level	at 1.0 W, 0.1 m, avg at 1.5, 2.0, 2.5, 3.0 kHz	94	97	100	dB
harmonics present	4 peaks within ± 15 dB from 1~4 kHz				
distortion	at 2.5 kHz, rated power			10	%
buzz, rattle, etc.	must be normal at sine wave, frequency range 1.5~8 kHz			2.83	V
polarity	cone moves forward w/ positive dc current to "+" terminal				
dimensions	Ø23.0 x 13.0				mm
magnet	Nd-Fe-B				
housing material	PBT (UL94V-0)				
cone material	PET				
terminal	pins type				
weight			5.3		g
operating temperature		-20		60	°C
storage temperature		-30		70	°C
hand soldering	for 1~3 seconds	355	360	365	°C
RoHS	yes				

Notes: 1. All specifications measured at 15~35°C, humidity at 45~85%, under 86~106 kPa pressure, unless otherwise noted.

DISCONTINUED

MECHANICAL DRAWING

units: mm
tolerance: ±0.5 mm

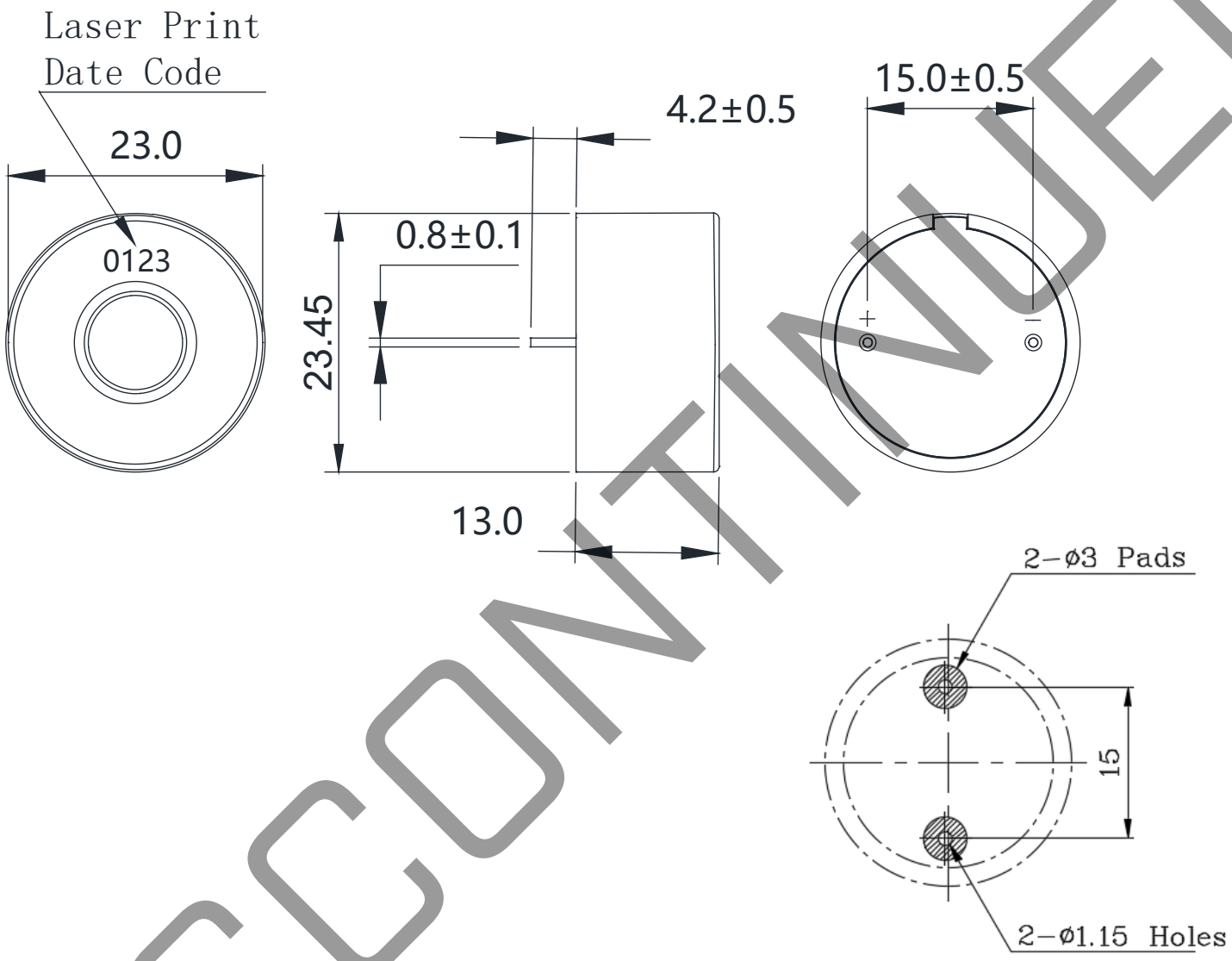

Recommended PCB Layout
Top View

DISCONTINUED

RESPONSE CURVES

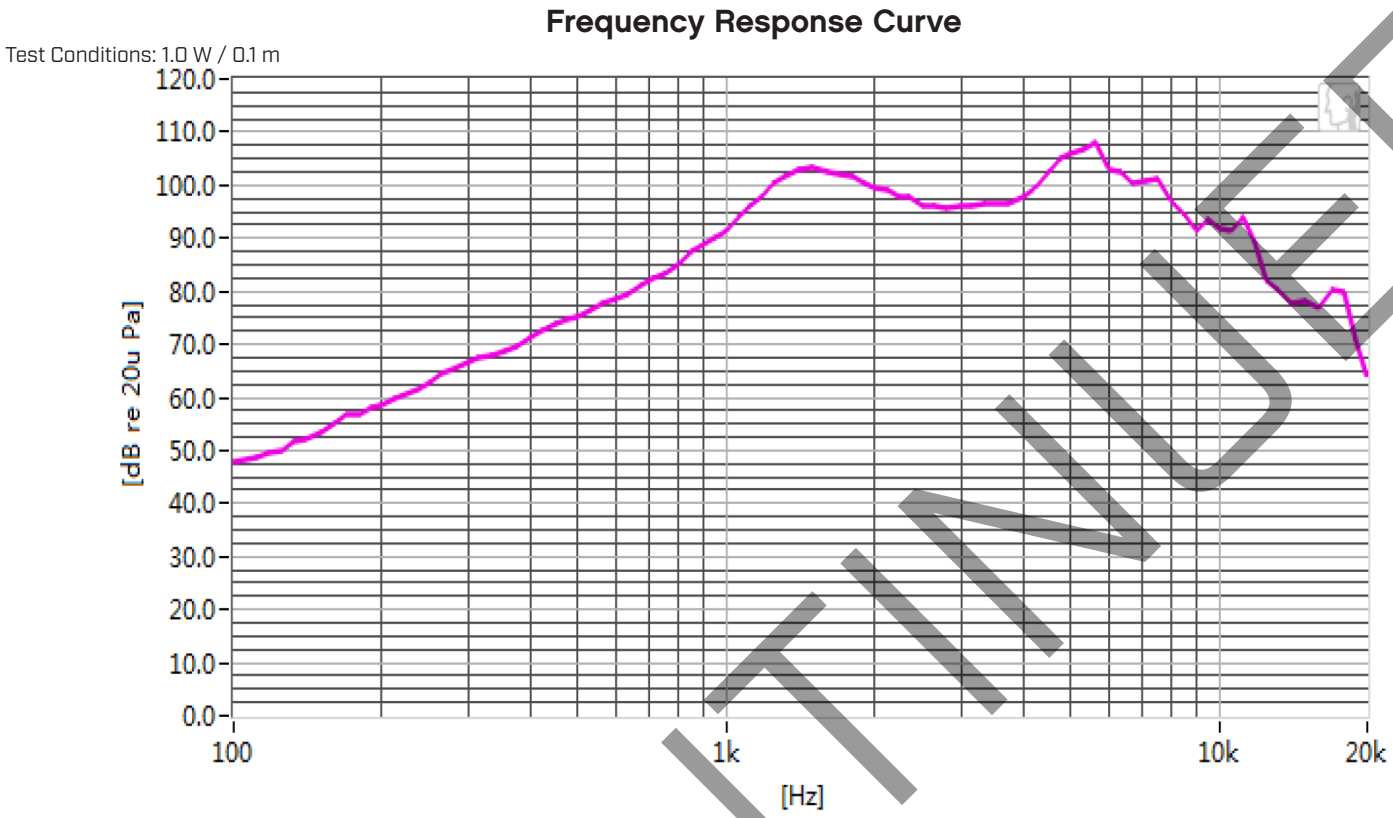

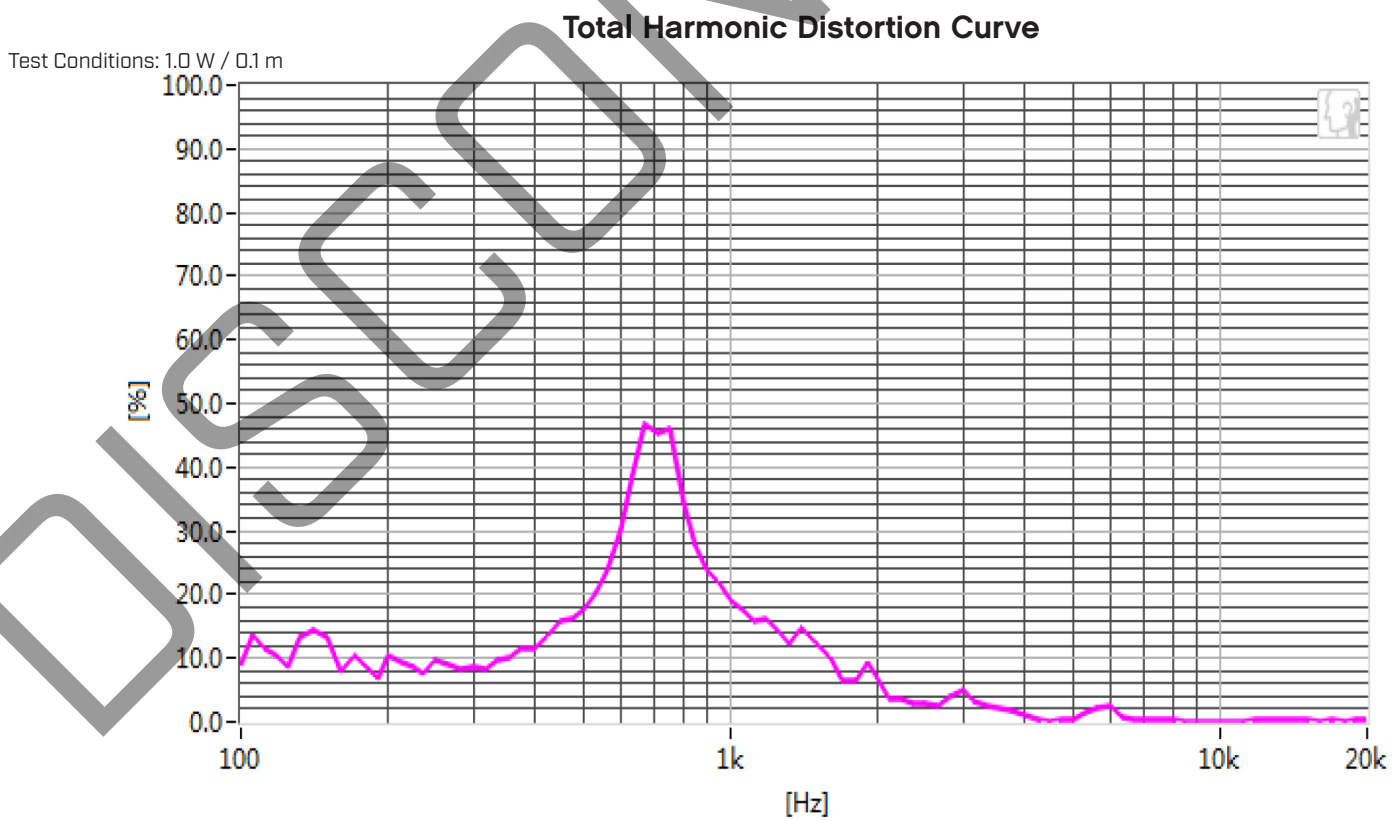

DISCONTINUED

REVISION HISTORY

rev.	description	date
1.0	initial release	01/03/2024
1.01	CUI Devices rebranded to Same Sky	09/11/2024

The revision history provided is for informational purposes only and is believed to be accurate.

DISCONTINUED

Same Sky offers a one (1) year limited warranty. Complete warranty information is listed on our website.

Same Sky reserves the right to make changes to the product at any time without notice. Information provided by Same Sky is believed to be accurate and reliable. However, no responsibility is assumed by Same Sky for its use, nor for any infringements of patents or other rights of third parties which may result from its use.

Same Sky products are not authorized or warranted for use as critical components in equipment that requires an extremely high level of reliability. A critical component is any component of a life support device or system whose failure to perform can be reasonably expected to cause the failure of the life support device or system, or to affect its safety or effectiveness.