CUI Devices is now Same Sky! Learn More

MODEL: CMS-35208N | **DESCRIPTION:** SPEAKER

DISCONTINUED

FEATURES

- 98 dB SPL
- 720 Hz resonant frequency
- Nd-Fe-B magnet

RoHS

SPECIFICATIONS

parameter	conditions/description	min	typ	max	units
input power	maximum power: IEC-60268-5, filter 60s on/120s off, 10 cycles at room temp		1.0	1.5	W
impedance	at 1.0 kHz, 1.0 V	6.8	8	9.2	Ω
resonant frequency (Fo)	at 1.0 V	576	720	864	Hz
frequency response		Fo		2,500	Hz
sound pressure level	at 1.0 W, 0.1 m ave, at 1.0, 1.2, 1.5, 2.0 kHz	95	98	101	dB
distortion	at 1.0 kHz, 1 W			15	%
buzz, rattle, etc.	must be normal at sine wave between Fo ~ 2,500 Hz		2.83		V
dimensions	35.5 x 20.5 x 8.0				mm
magnet	Nd-Fe-B (Ø11 x 1.5 mm)				
material	ABS UL-94 1/16" HB				
cone material	cloth				
terminal	solder terminals				
weight			5.9		g
operating temperature		-20		60	°C
storage temperature		-20		60	°C
RoHS	yes				

Notes: 1. All specifications measured at 5~35°C, humidity at 45~85%, under 86~106 kPa pressure, unless otherwise noted.

SOLDERABILITY

parameter	conditions/description	min	typ	max	units
hand soldering	for 3 ±1 seconds	360	370	380	°C

MECHANICAL DRAWING

units: mm
tolerance: ±0.5 mm

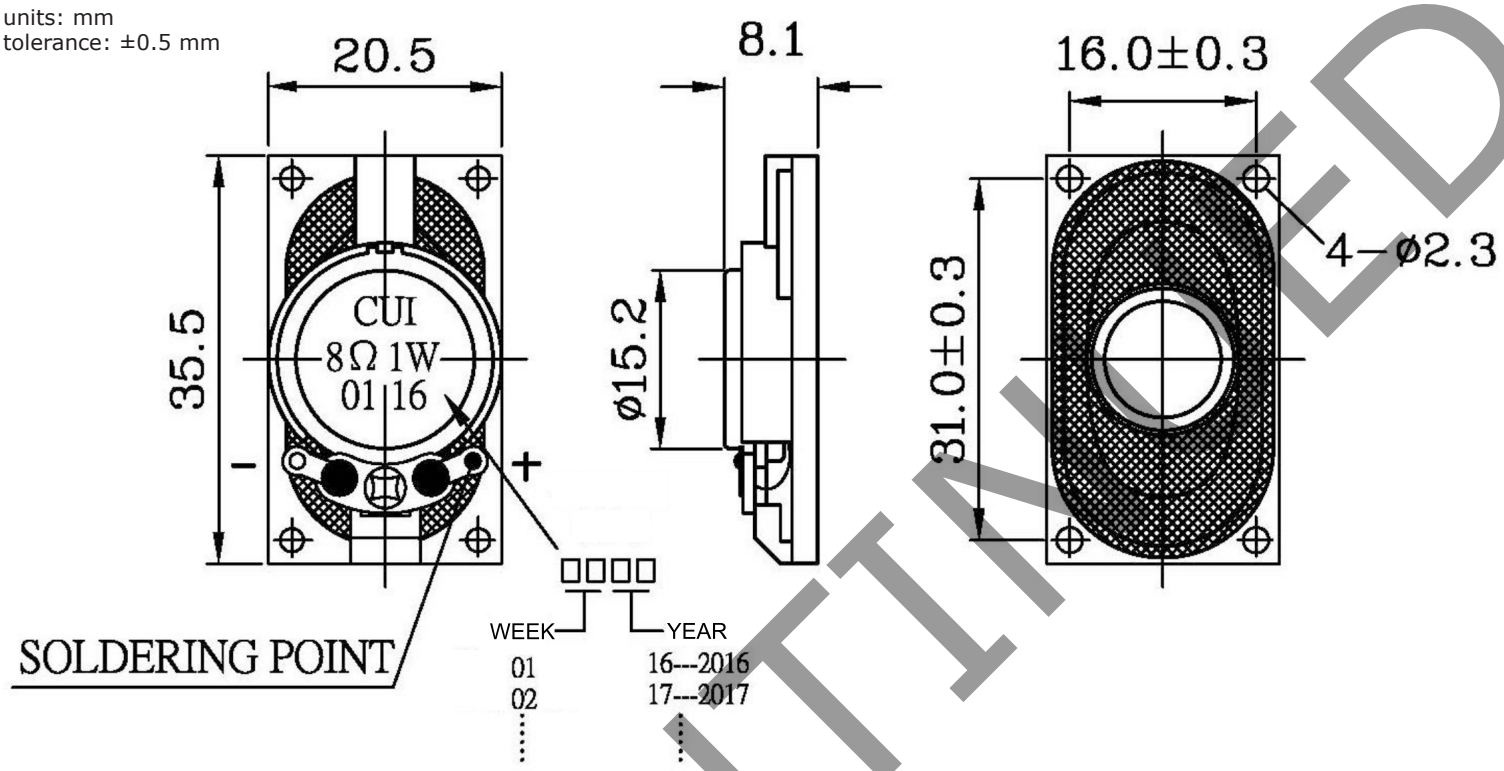

FREQUENCY RESPONSE CURVE

Frequency Response, Magn Db re 20,00µPA (at 1 W / 0.1 m)

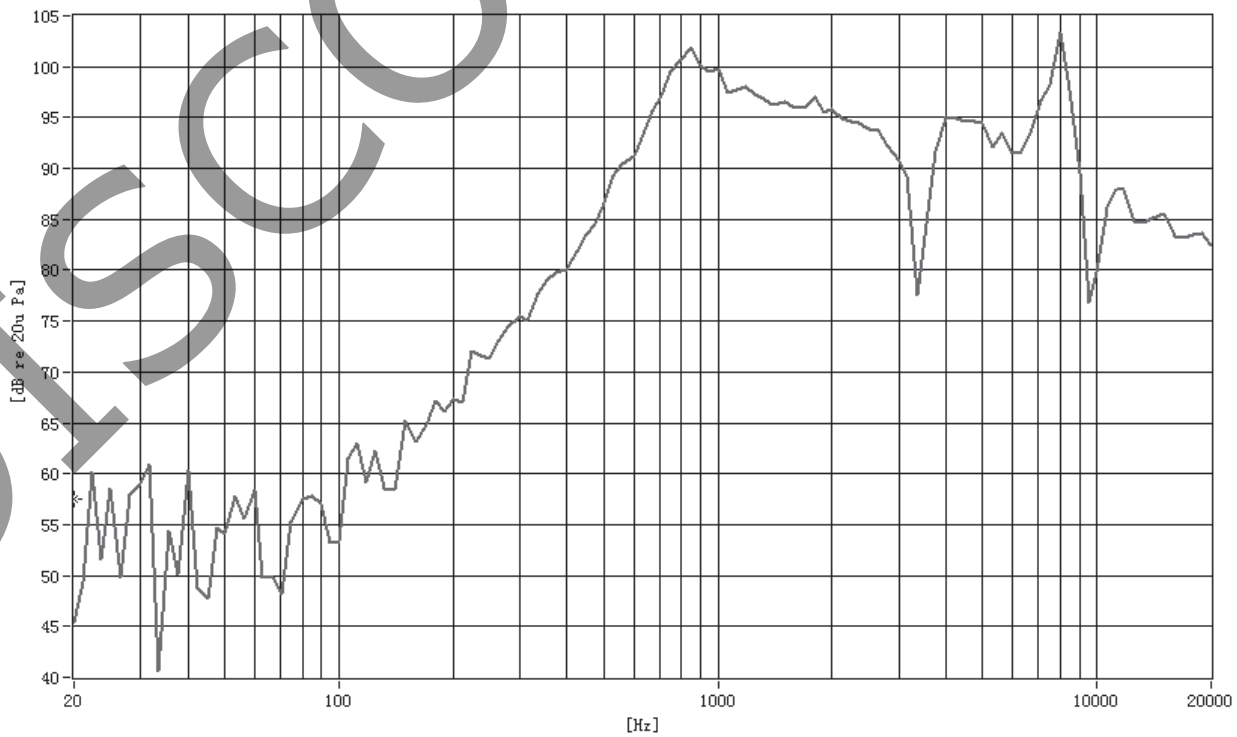

DISCONTINUED

PACKAGING

units: mm

Carton Size: 450 x 290 x 260 mm
Carton QTY: 1,300 pcs per carton

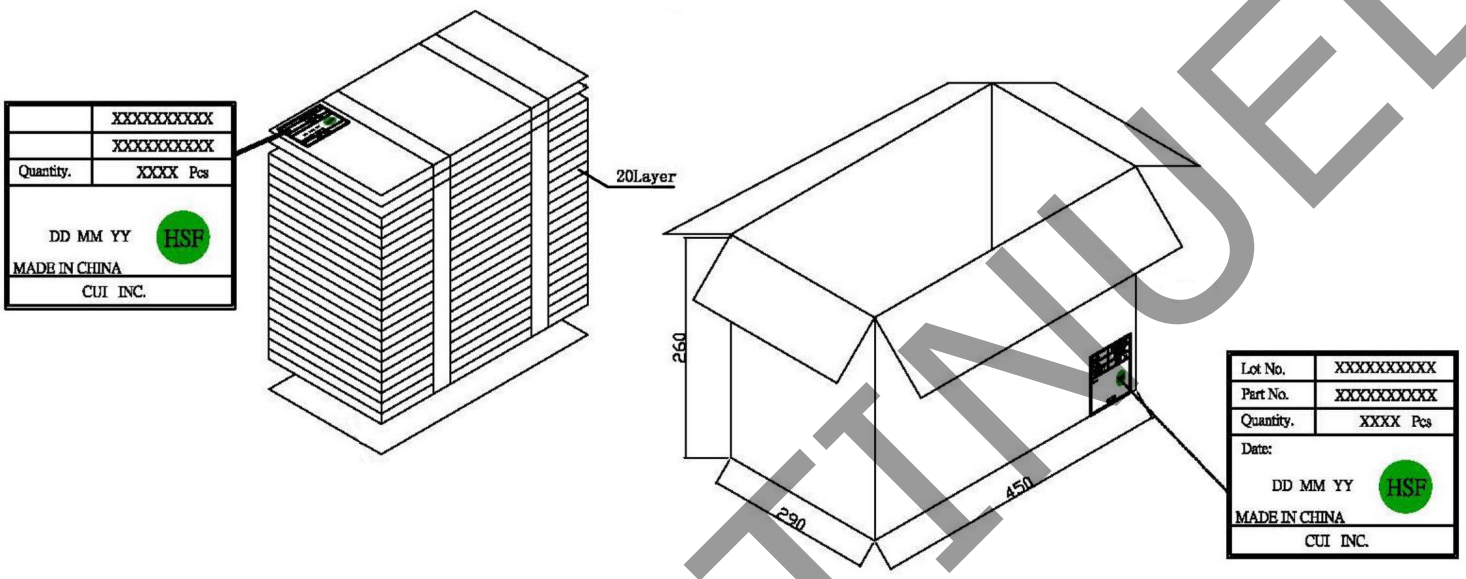

DISCONTINUED

REVISION HISTORY

rev.	description	date
1.0	initial release	06/21/2016
1.01	brand update	01/22/2020

The revision history provided is for informational purposes only and is believed to be accurate.

DISCONTINUED

CUI DEVICES

CUI Devices offers a one (1) year limited warranty. Complete warranty information is listed on our website.

CUI Devices reserves the right to make changes to the product at any time without notice. Information provided by CUI Devices is believed to be accurate and reliable. However, no responsibility is assumed by CUI Devices for its use, nor for any infringements of patents or other rights of third parties which may result from its use.

CUI Devices products are not authorized or warranted for use as critical components in equipment that requires an extremely high level of reliability. A critical component is any component of a life support device or system whose failure to perform can be reasonably expected to cause the failure of the life support device or system, or to affect its safety or effectiveness.