CUI Devices is now Same Sky! Learn More

MODEL: CMS-26418N | DESCRIPTION: SPEAKER

FEATURES

- miniature speaker
- 520 Hz resonant frequency
- Nd-Fe-B magnet

SPECIFICATIONS

parameter	conditions/description	min	typ	max	units
input power	maximum power: IEC-60268-5, filter 60s on/120s off, 10 cycles at room temp		0.2	0.3	W
impedance	at 1.0 kHz, 1.0 V	6.8	8	9.2	Ω
resonant frequency (Fo)	at 1.0 V	416	520	624	Hz
frequency response	output SPL ±10 dB	Fo		6,500	Hz
sound pressure level	at 0.2 W, 0.1 m ave, at 1.0, 1.2, 1.5, 2.0 kHz at 1 W, 1 m ave, at 1.0, 1.2, 1.5, 2.0 kHz	89 76	92 79	95 82	dB dB
distortion	at 1.0 kHz, 0.2 W			10	%
buzz, rattle, etc.	must be normal at sine wave between Fo ~ 6,500 Hz		1.26		V
dimensions	Ø26.0 x 4.1				mm
magnet	Nd-Fe-B (Ø9.5 x 1.5 mm)				
material	metal				
cone material	Pet				
terminal	solder pads				
weight			4.8		g
operating temperature		-20		55	°C
storage temperature		-20		55	°C
RoHS	yes				

Notes: 1. All specifications measured at 5~35°C, humidity at 45~85%, under 86~106 kPa pressure, unless otherwise noted.

SOLDERABILITY

parameter	conditions/description	min	typ	max	units
hand soldering	for 3 ±1 seconds	360	370	380	°C

MECHANICAL DRAWING

units: mm
tolerance: ±0.3 mm

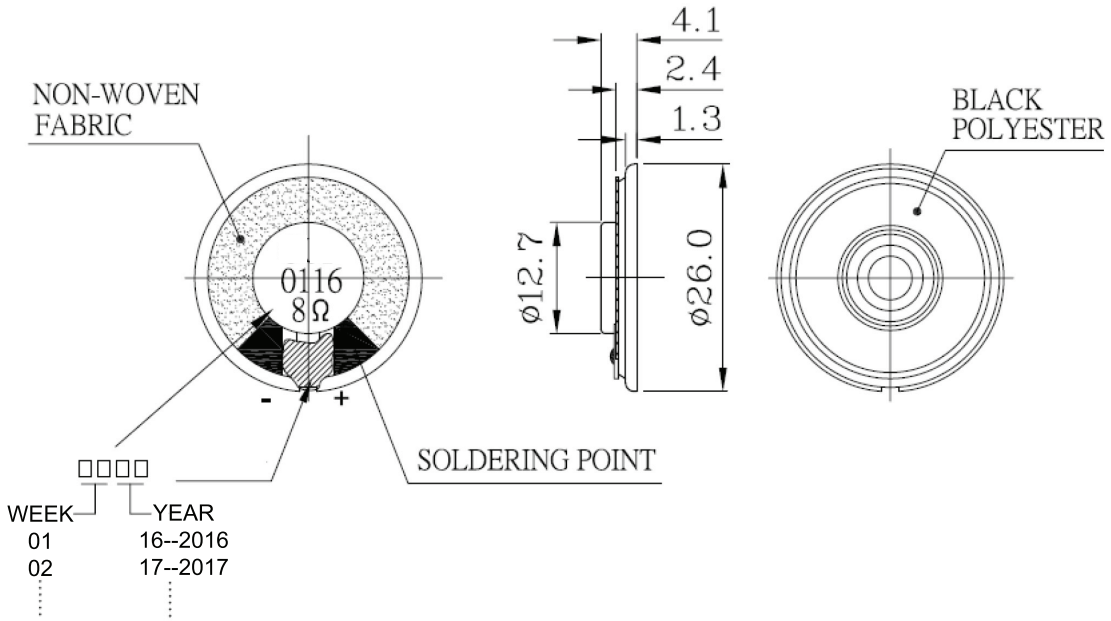

RESPONSE CURVES

Frequency Response Curve

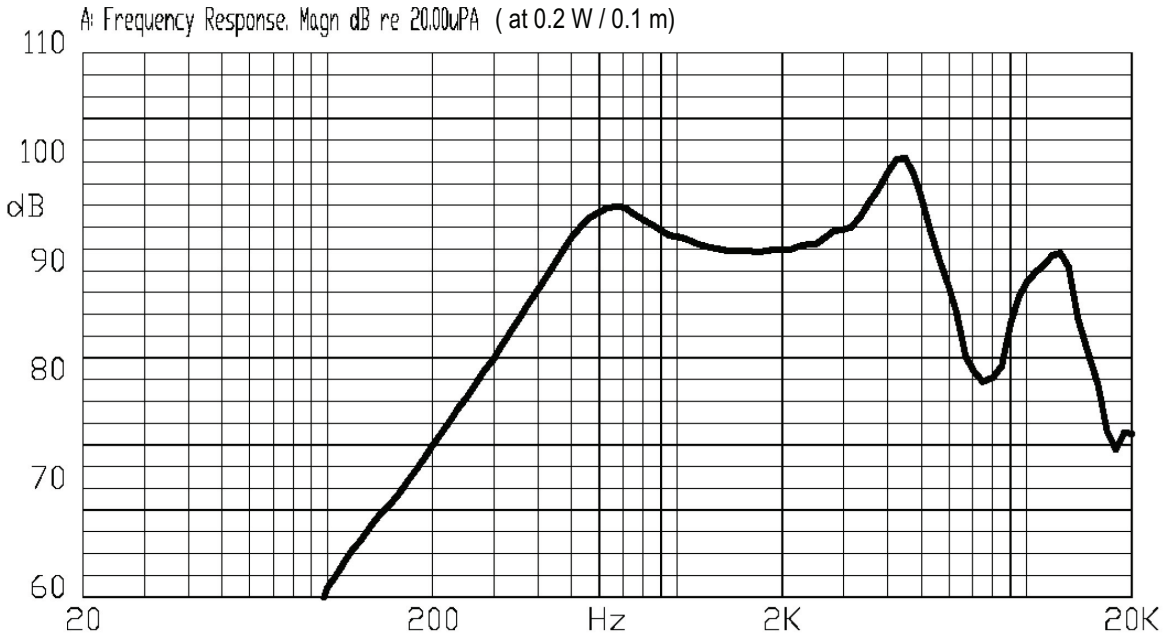

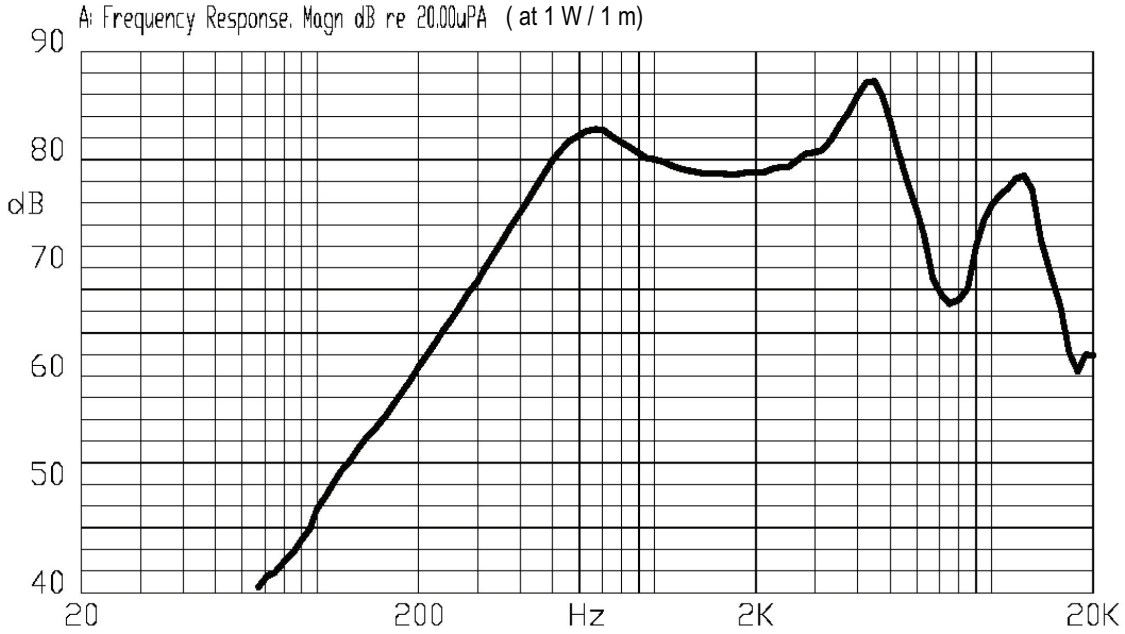

THIELE-SMALL PARAMETERS

parameter	conditions/description	typ
Mechanical Q Factor	Qms	2.4959
Electrical Q Factor	Qes	9.9947
Total Q Factor	Qts	1.9972
Compliance Equivalent Volume	Vas	0.0218

Notes: 2. Results represent typical performance in Free Air conditions.

PACKAGING

units: mm

Tray Size: 350 x 235 x 25 mm
Carton Size: 355 x 242 x 300 mm
Tray QTY: 40 pcs per tray
Carton QTY: 680 pcs per carton

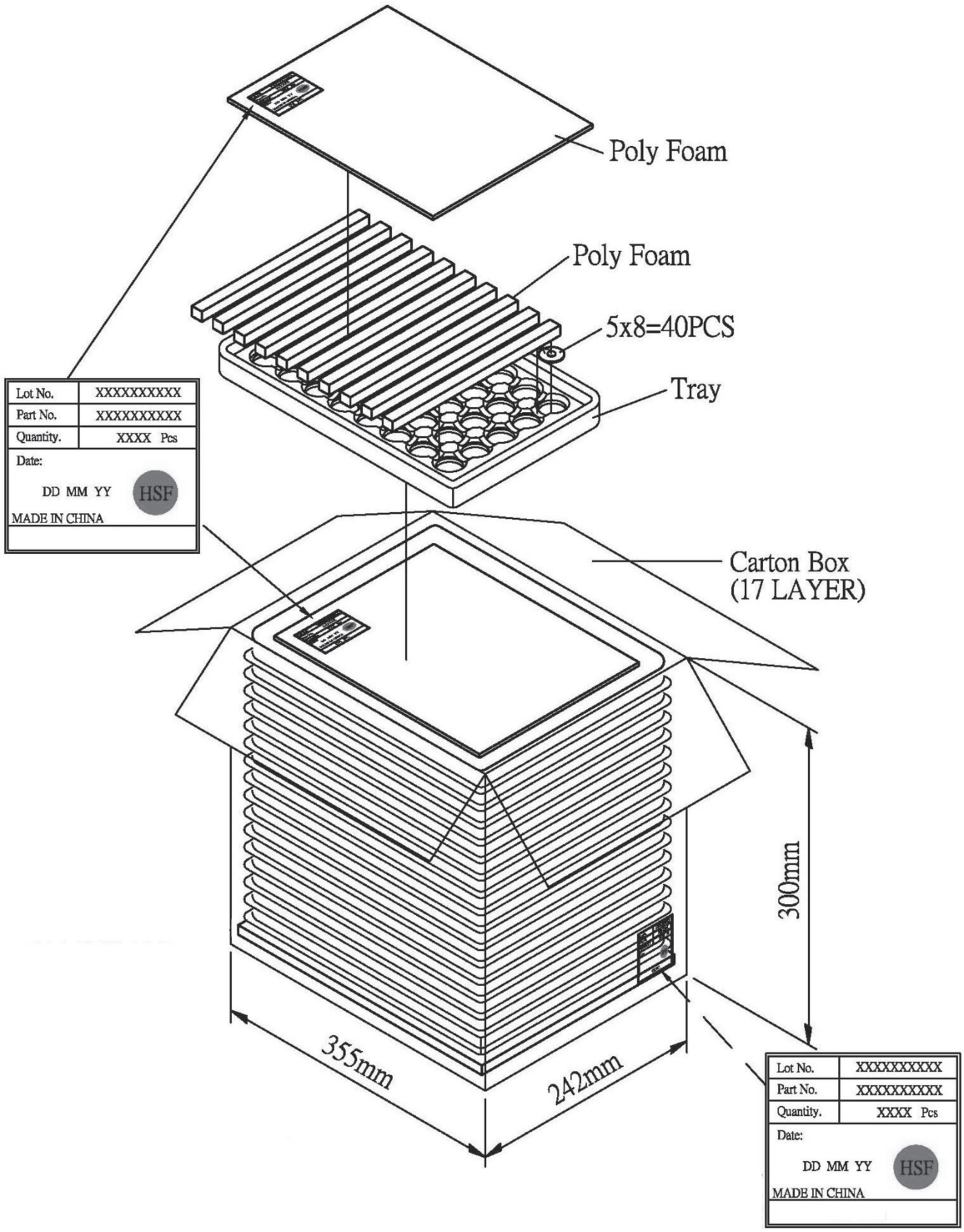

REVISION HISTORY

rev.	description	date
1.0	initial release	06/24/2016
1.01	brand update	01/21/2020
1.02	logo, datasheet style update	08/05/2022
1.03	CUI Devices rebranded to Same Sky	09/11/2024
1.04	added Thiele-Small Parameters	02/07/2025

The revision history provided is for informational purposes only and is believed to be accurate.

Same Sky offers a one (1) year limited warranty. Complete warranty information is listed on our website.

Same Sky reserves the right to make changes to the product at any time without notice. Information provided by Same Sky is believed to be accurate and reliable. However, no responsibility is assumed by Same Sky for its use, nor for any infringements of patents or other rights of third parties which may result from its use.

Same Sky products are not authorized or warranted for use as critical components in equipment that requires an extremely high level of reliability. A critical component is any component of a life support device or system whose failure to perform can be reasonably expected to cause the failure of the life support device or system, or to affect its safety or effectiveness.