CUI Devices is now Same Sky! Learn More

same sky

SERIES: CFM-60V | DESCRIPTION: DC AXIAL FAN

FEATURES

- omniCOOL™ bearing system
- 60 x 60 mm frame
- multiple speed options for different cooling needs
- tachometer signal and rotation detect options available
- auto restart protection standard on all models

MODEL

MODEL	input voltage rated (Vdc)	input voltage range (Vdc)	input current[1] max (mA)	input power[1] max (W)	rated speed[1] typ (RPM±15%)	air flow[2] (CFM)	static pressure[3] (inch H_2O)	noise[4] max (dBA)
CFM-6010V-130-205	12	6~13.8	56	0.68	3000	12.2	0.08	20.5
CFM-6010V-135-250	12	4.5~13.8	87	1.05	3500	14.3	0.10	25.0
CFM-6010V-140-285	12	4.5~13.8	125	1.50	4000	16.3	0.12	28.5
CFM-6015V-122-145	12	4.5~13.8	29	0.35	2200	12.7	0.04	14.5
CFM-6015V-130-213	12	4.5~13.8	58	0.70	3000	17.6	0.12	21.3
CFM-6015V-139-292	12	4.5~13.8	79	0.95	3900	22.8	0.14	29.2
CFM-6015V-147-342	12	4.5~13.8	147	1.77	4700	26.4	0.18	34.2
CFM-6015V-154-362	12	4.5~13.8	213	2.56	5400	30.4	0.22	36.2
CFM-6015V-239-292	24	8~27.6	48	1.16	3900	22.8	0.14	29.2
CFM-6015V-247-342	24	8~27.6	87	2.09	4700	26.4	0.18	34.2
CFM-6015V-254-362	24	8~27.6	98	2.36	5400	30.4	0.22	36.2
CFM-6020V-131-210	12	4.5~13.8	48	0.58	3100	16.5	0.10	21.0
CFM-6020V-142-280	12	4.5~13.8	75	0.90	4200	19.0	0.16	28.0
CFM-6020V-150-335	12	4.5~13.8	115	1.38	5000	23.0	0.21	33.5
CFM-6020V-157-390	12	4.5~13.8	164	1.97	5700	25.5	0.27	39.0
CFM-6020V-230-230	24	8~27.6	29	0.70	3100	16.5	0.10	21.0
CFM-6020V-237-280	24	8~27.6	42	1.01	4200	19.0	0.16	28.0
CFM-6020V-245-335	24	8~27.6	87	2.09	5700	25.5	0.27	39.0
CFM-6025V-125-107	12	4.5~13.8	26	0.32	2500	13.8	0.06	10.7
CFM-6025V-131-167	12	4.5~13.8	53	0.64	3100	16.0	0.10	16.7
CFM-6025V-138-220	12	4.5~13.8	83	1.00	3800	19.3	0.15	22.0
CFM-6025V-145-270	12	4.5~13.8	87	1.05	4500	23.5	0.21	27.0
CFM-6025V-152-312	12	4.5~13.8	150	1.80	5200	27.0	0.31	31.2
CFM-6025V-231-167	24	8~27.6	28	0.68	3100	16.0	0.10	16.7

Notes:
1. At rated voltage, 25°C, 0 inch H_2O static pressure, after 10 minutes
2. As per AMCA 210 or DIN 24163, at rated voltage, stabilized RPM, 0 inch H_2O static pressure
3. As per AMCA 210 or DIN 24163, at rated voltage, stabilized RPM, 0 CFM airflow.
4. Measured in a semi-anechoic chamber with background noise < 15 dBA at 1 m from the fan intake.
5. All specifications are measured at 25°C, 65% relative humidity unless otherwise specified.

MODEL

	input voltage		input current[1]	input power[1]	rated speed[1]	air flow[2]	static pressure[3]	noise[4]
	rated (Vdc)	range (Vdc)	max (mA)	max (W)	typ (RPM±15%)	(CFM)	(inch H_2O)	max (dBA)
CFM-6025V-238-220	24	8~27.6	38	0.92	3800	19.3	0.15	22.0
CFM-6025V-245-270	24	8~27.6	58	1.40	4500	23.5	0.21	27.0
CFM-6025V-252-312	24	8~27.6	92	2.21	5200	27.0	0.31	31.2

Notes:
1. At rated voltage, 25°C, 0 inch H_2O static pressure, after 10 minutes
2. As per AMCA 210 or DIN 24163, at rated voltage, stabilized RPM, 0 inch H_2O static pressure
3. As per AMCA 210 or DIN 24163, at rated voltage, stabilized RPM, 0 CFM airflow.
4. Measured in a semi-anechoic chamber with background noise < 15 dBA at 1 m from the fan intake.
5. All specifications are measured at 25°C, 65% relative humidity unless otherwise specified.
6. *Discontinued models.

PART NUMBER KEY

CFM-6010V-130-205 - XX - CXX

Base Number

Fan Signals
"blank" = no signals
11* = rotation detector signal
20 = tachometer signal

Reserved for Custom Configurations

INPUT

parameter	conditions/description	min	typ	max	units
operating input voltage[1]	12 Vdc input models 24 Vdc input models	4.5 8	12 24	13.8 27.6	Vdc Vdc
starting voltage[2]	12 Vdc input models 24 Vdc input models		4.5 8		Vdc Vdc

Note: 1. See Model section on page 1 for specific input voltage ranges.
2. Starting voltage for model CFM-6010V-130-205 is 6 Vdc.

PERFORMANCE[3]

parameter	conditions/description	min	typ	max	units
rated speed	at rated voltage, 25°C, after 10 minutes	2200		5700	RPM
air flow	at 0 inch H_2O, see performance curves	12.2		30.4	CFM
static pressure	at 0 CFM, see performance curves	0.04		0.31	inch H_2O
noise	at 1 m	10.7		39.0	dBA

Note: 3. See Model section on page 1 for specific values.

PROTECTIONS / FEATURES[4]

parameter	conditions/description	min	typ	max	units
auto restart	on all models				
rotation detector signal	available on “11” models				
tachometer signal	available on “20” models				

Notes: 4. See Application Notes for details.

SAFETY & COMPLIANCE

parameter	conditions/description	min	typ	max	units
insulation resistance of frame	at 500 Vdc between internal stator and positive lead wire	10			MΩ
dielectric strength	apply 500 Vac for 1 minute between housing and positive lead wire				
safety approvals	UL/cUL 507, TUV (EN 60950-1)				
EMI/EMC	EN 61000-6-1:2007, EN 61000-6-3:2007+A1				
life expectancy	at 40°C, 65% RH		70,000		hours
RoHS	yes				

ENVIRONMENTAL

parameter	conditions/description	min	typ	max	units
operating temperature		-10		70	°C
storage temperature		-40		70	°C

PERFORMANCE CURVES

CFM-6010V-130-205

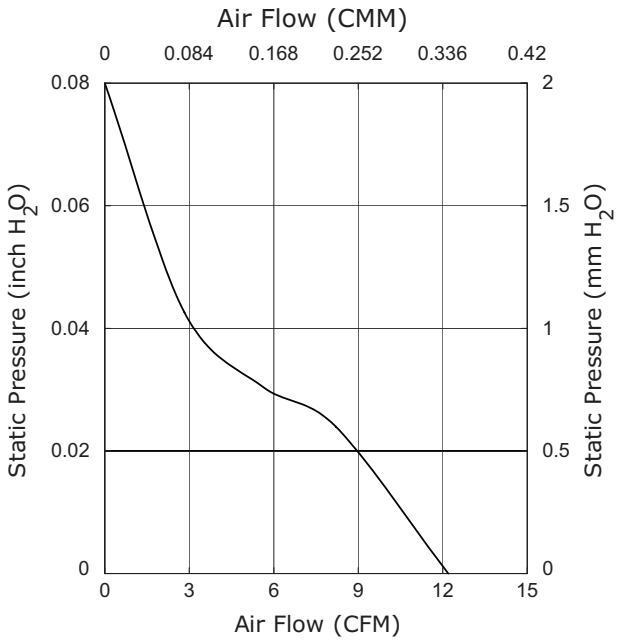

CFM-6010V-135-250

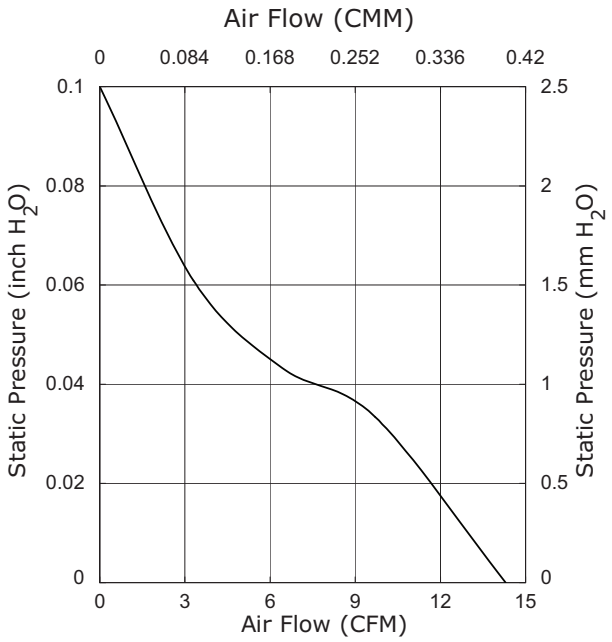

CFM-6010V-140-285

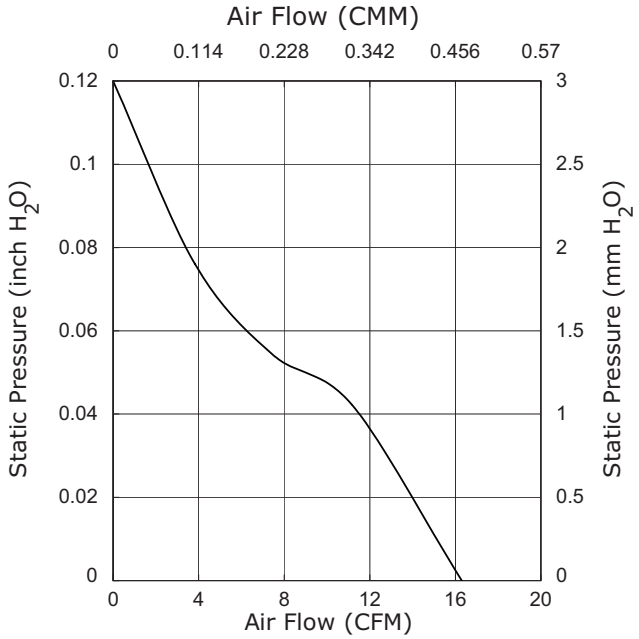

CFM-6010V-122-145

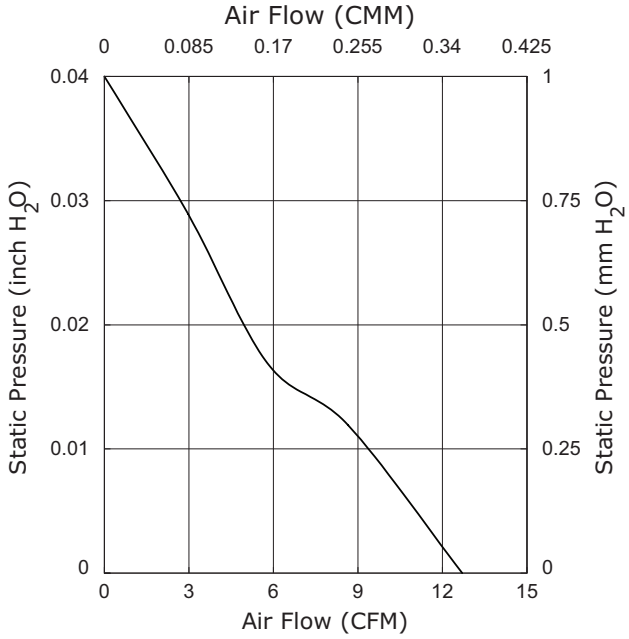

PERFORMANCE CURVES (CONTINUED)

CFM-6015V-130-213

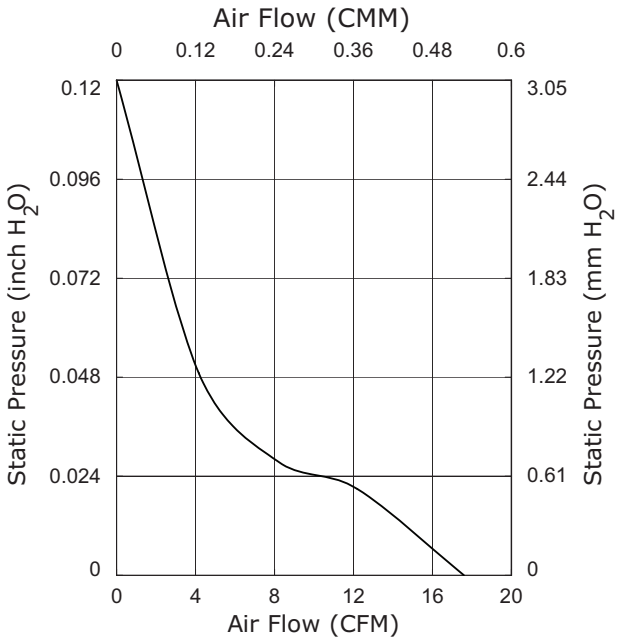

CFM-6015V-139-292

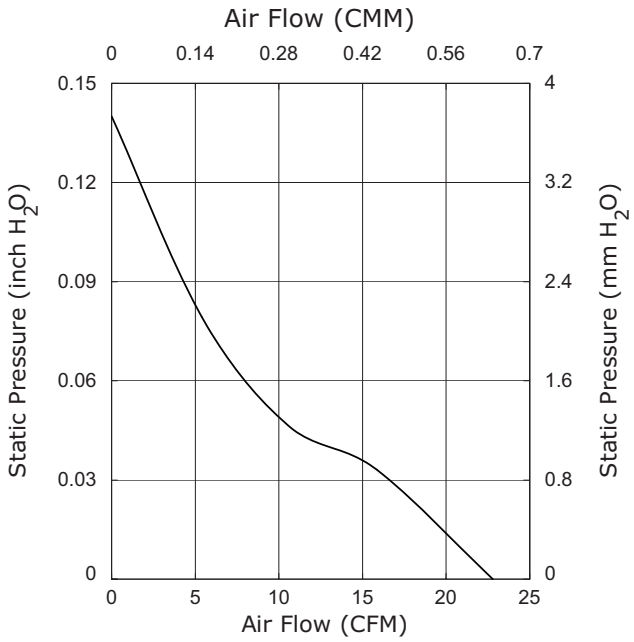

CFM-6015V-147-342

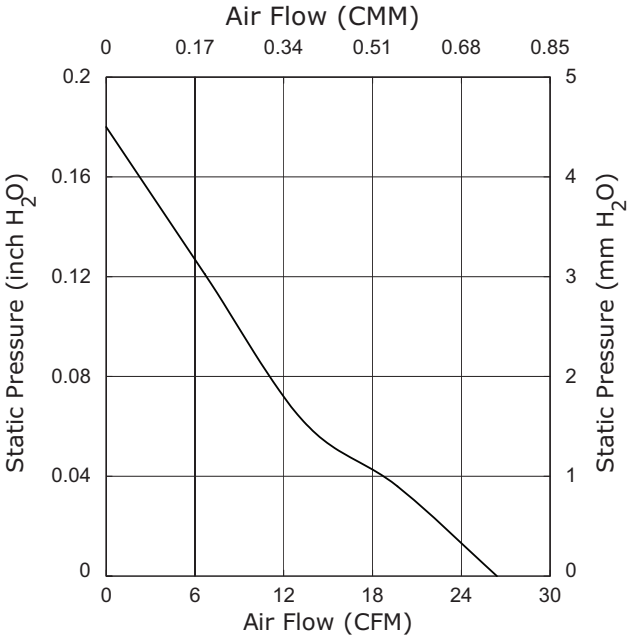

CFM-6015V-154-362

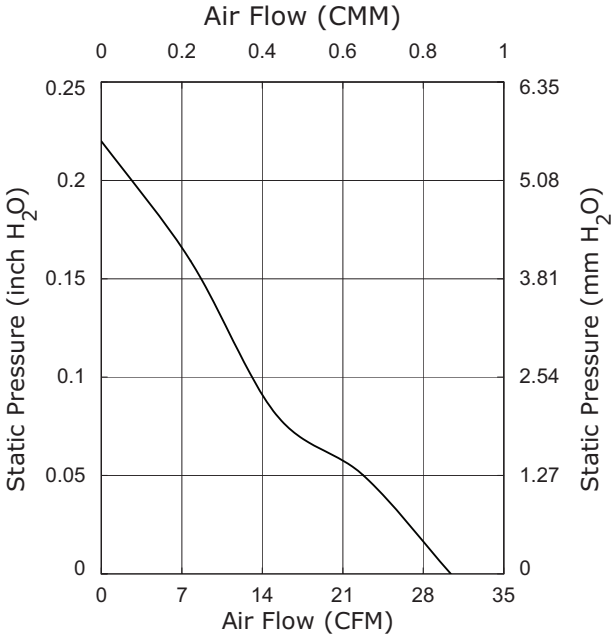

PERFORMANCE CURVES (CONTINUED)

CFM-6015V-239-292

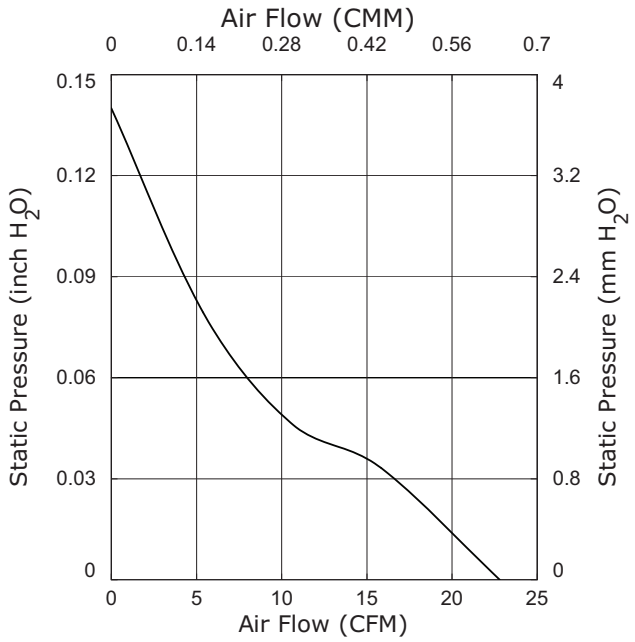

CFM-6015V-247-342

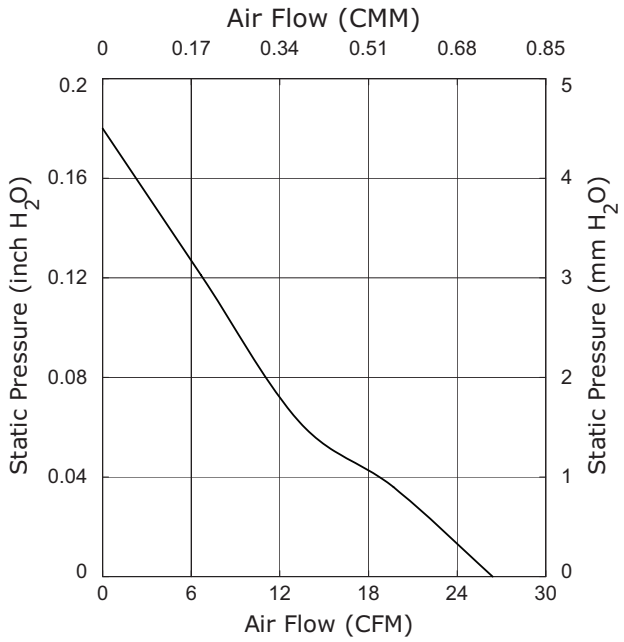

CFM-6015V-254-362

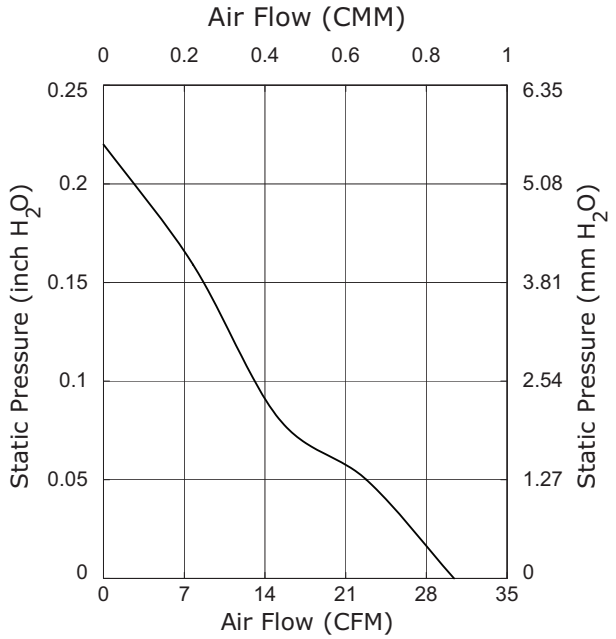

CFM-6020V-131-210

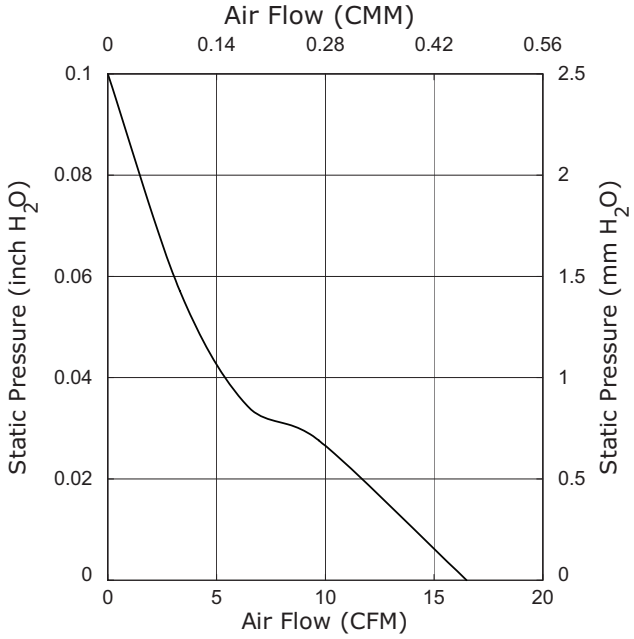

PERFORMANCE CURVES (CONTINUED)

CFM-6020V-142-280

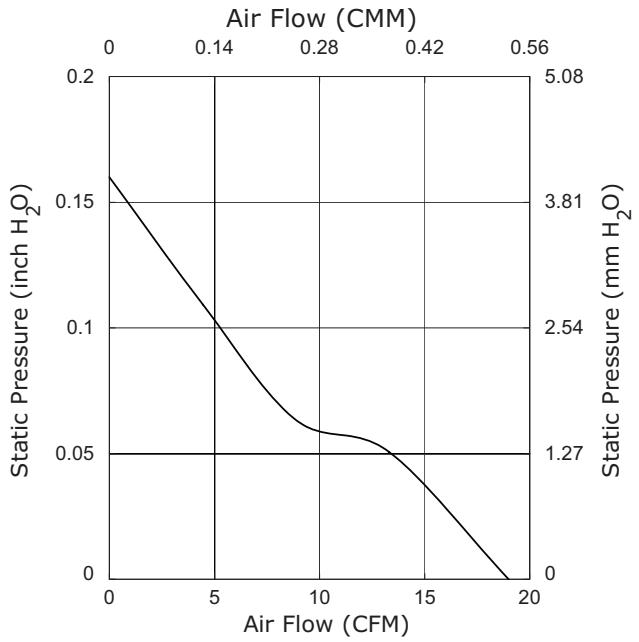

CFM-6020V-150-335

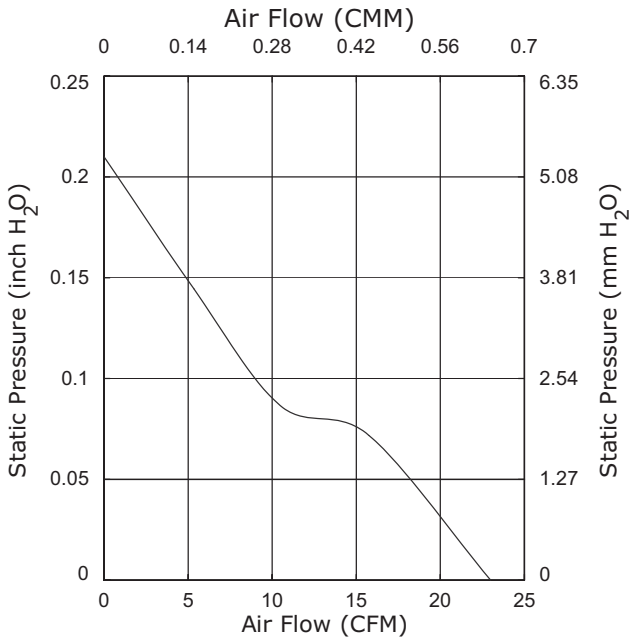

CFM-6020V-157-390

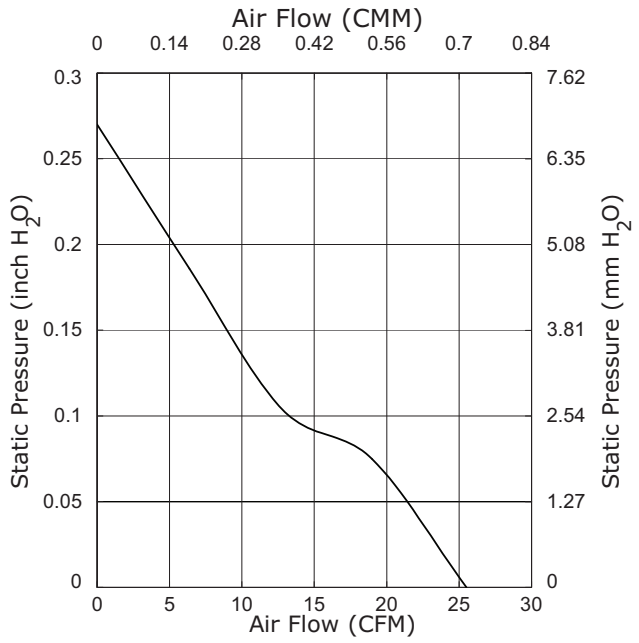

CFM-6020V-230-230

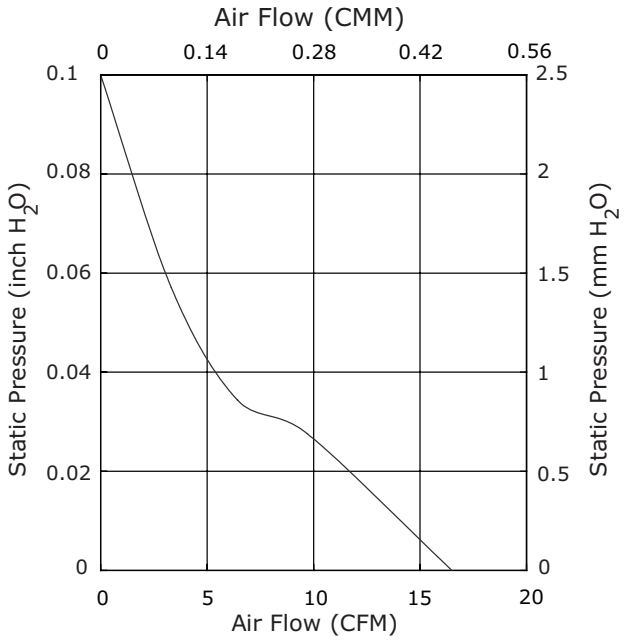

PERFORMANCE CURVES (CONTINUED)

CFM-6020V-237-280

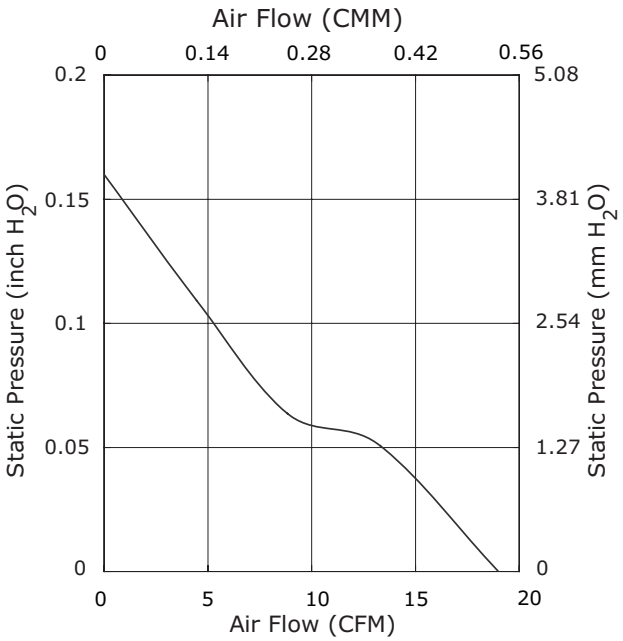

CFM-6020V-245-335

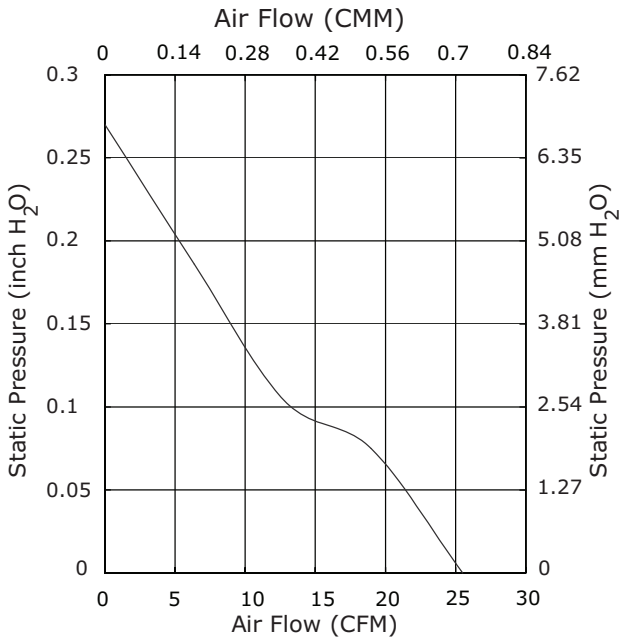

CFM-6025V-125-107

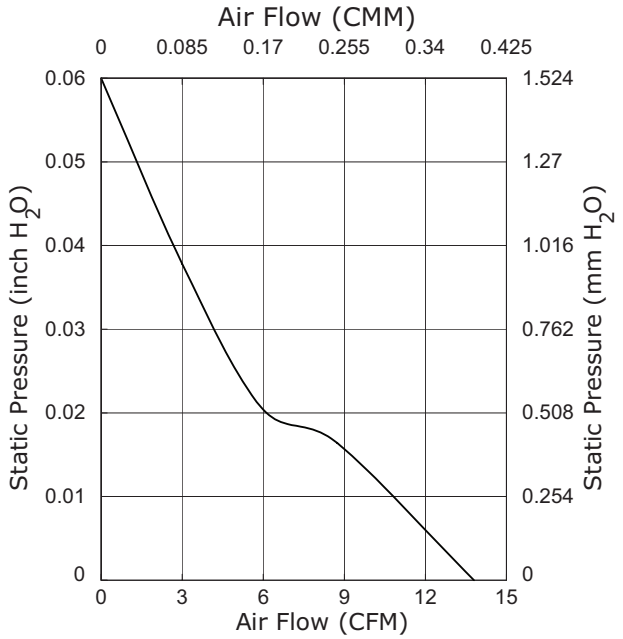

CFM-6025V-131-167

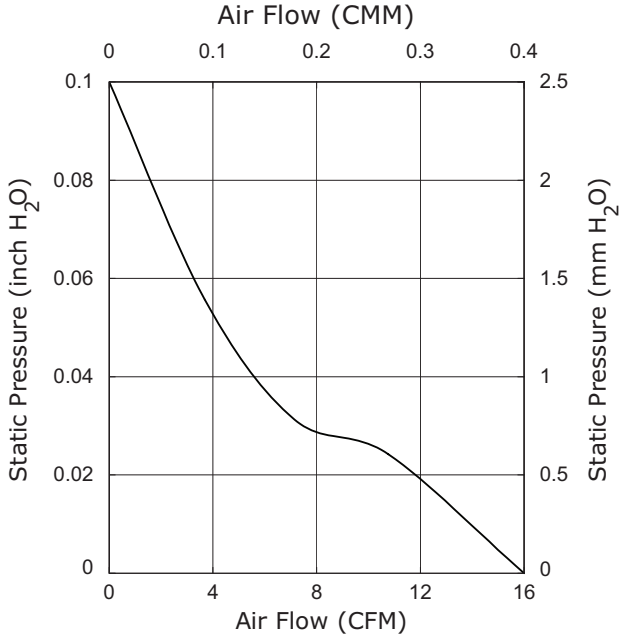

PERFORMANCE CURVES (CONTINUED)

CFM-6025V-138-220

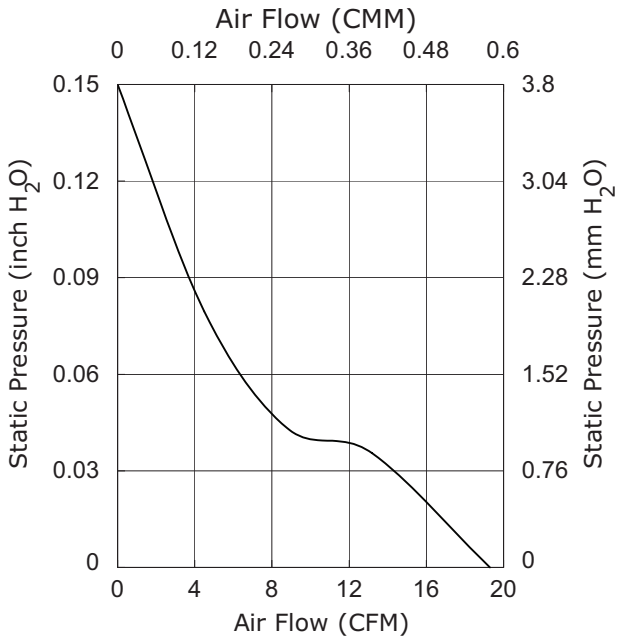

CFM-6025V-145-270

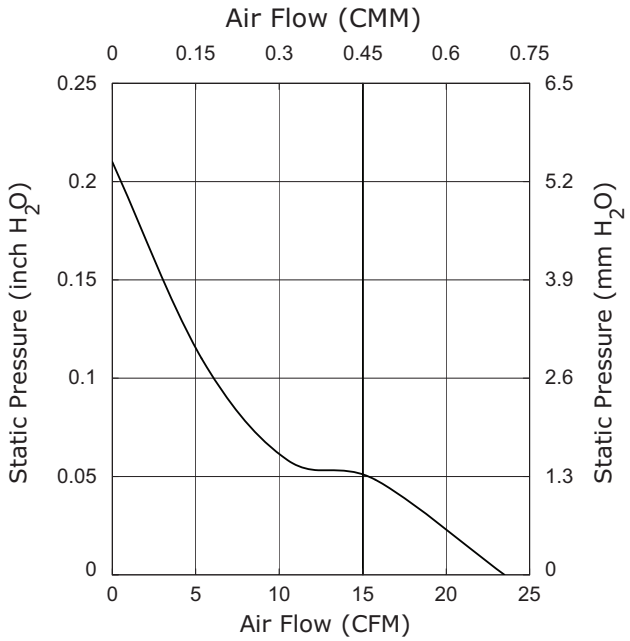

CFM-6025V-152-312

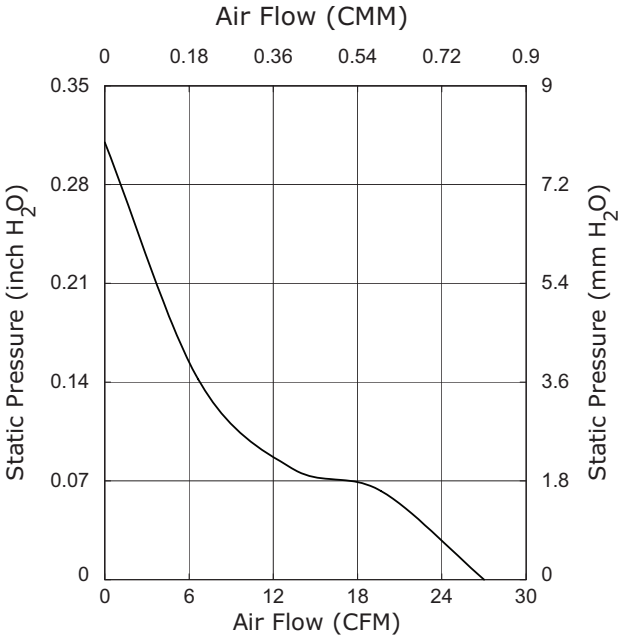

CFM-6025V-231-167

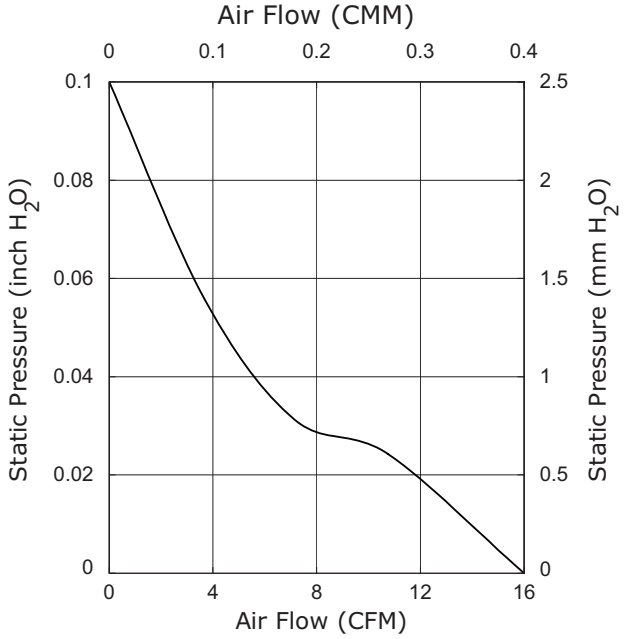

PERFORMANCE CURVES (CONTINUED)

CFM-6025V-238-220

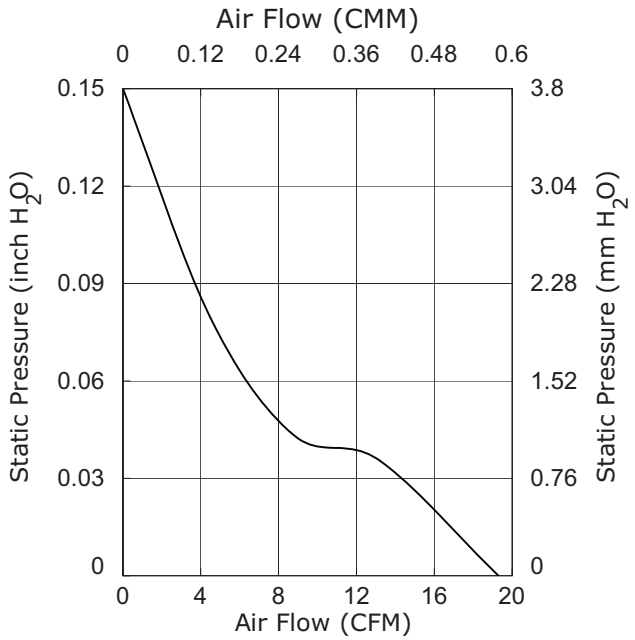

CFM-6025V-245-270

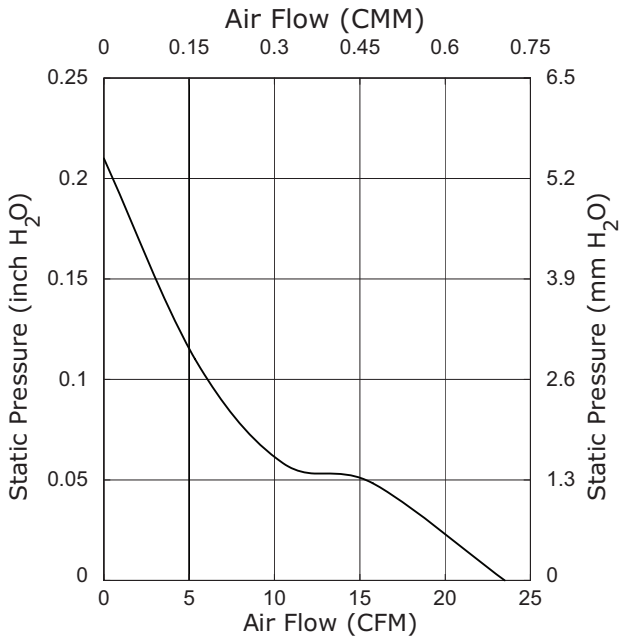

CFM-6025V-252-312

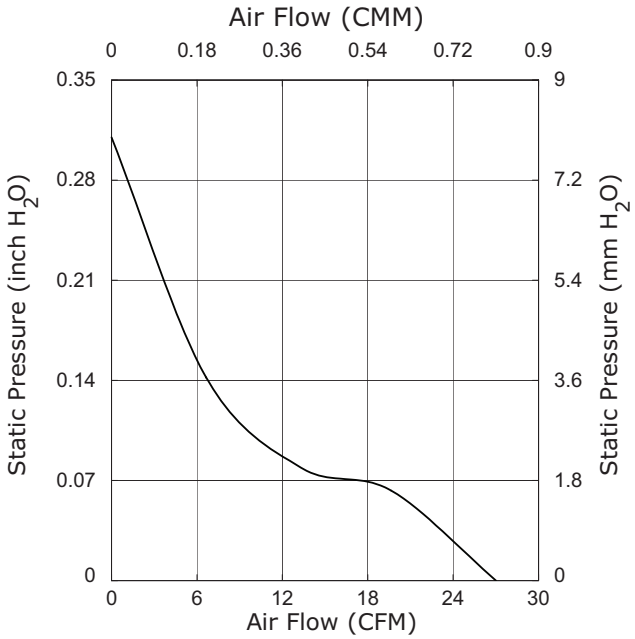

MECHANICAL

parameter	conditions/description	min	typ	max	units
motor	4 pole DC brushless				
bearing system	omniCOOL™				
direction of rotation	counter-clockwise viewed from front of fan blade				
dimensions	CFM-6010V models: 60 x 60 x 10 CFM-6015V models: 60 x 60 x 15 CFM-6020V models: 60 x 60 x 20 CFM-6025V models: 60 x 60 x 25				mm mm mm mm
material	PBT (UL94V-0)				
weight	CFM-6010V models CFM-6015V models CFM-6020V models CFM-6025V models		23 35.5 50 45		g g g g

MECHANICAL DRAWINGS

units: mm

wire: UL 1007, 26 AWG

MOUNTING SCREW (Pan Head)			
Screw Type	Size	Standard	Torque
Machine Screw	M4	JIS B1111-1974	3~4 kgf-cm
Self-tapping Screw	M5	JIS B1122 Type 2	5~6 kgf-cm

CFM-6010V

WIRE CONNECTIONS	
Wire Color	Function
Red	+Vin
Black	-Vin
White[1]	RD Signal
Yellow[1]	Tach Signal

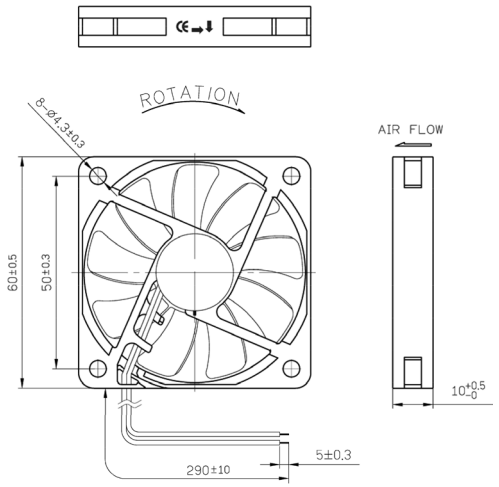

CFM-6015V

WIRE CONNECTIONS	
Wire Color	Function
Red	+Vin
Black	-Vin
White[1]	RD Signal
Yellow[1]	Tach Signal

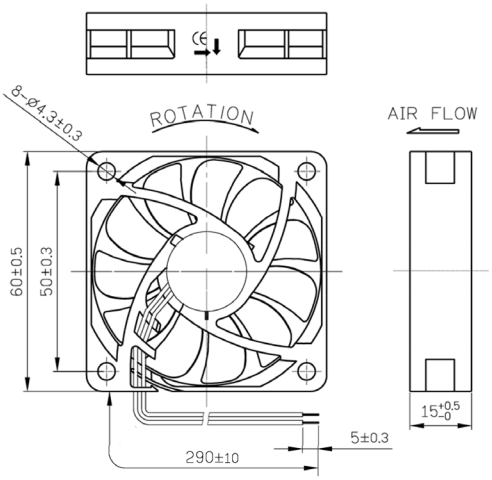

Notes: 1. Wires only present on versions with output signals.

MECHANICAL DRAWINGS (CONTINUED)

units: mm

wire: UL 1007, 26 AWG

MOUNTING SCREW (Pan Head)			
Screw Type	Size	Standard	Torque
Machine Screw	M4	JIS B1111-1974	3~4 kgf-cm
Self-tapping Screw	M5	JIS B1122 Type 2	5~6 kgf-cm

CFM-6020V

WIRE CONNECTIONS	
Wire Color	Function
Red	+Vin
Black	-Vin
White[1]	RD Signal
Yellow[1]	Tach Signal

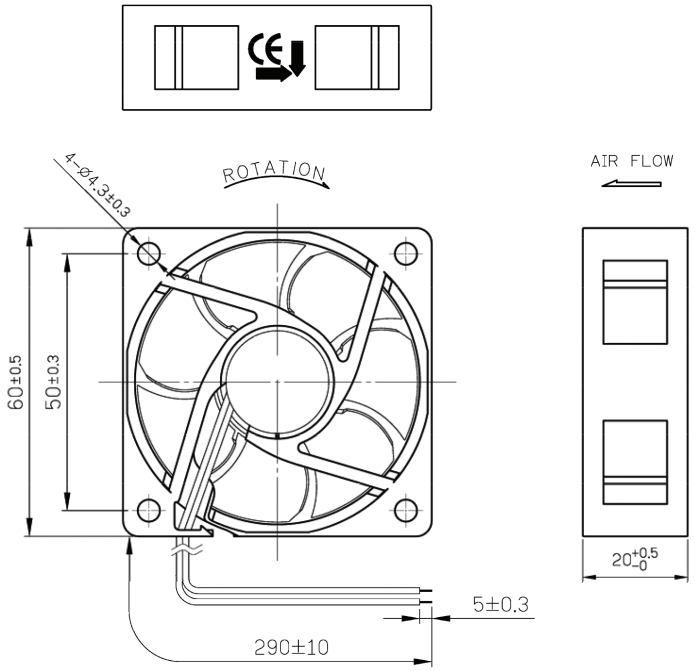

CFM-6025V

WIRE CONNECTIONS	
Wire Color	Function
Red	+Vin
Black	-Vin
White[1]	RD Signal
Yellow[1]	Tach Signal

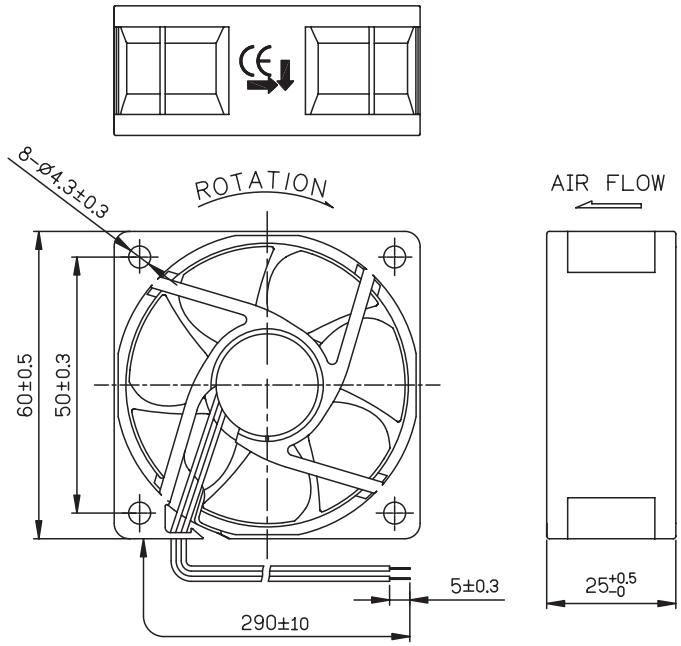

Notes: 1. Wires only present on versions with output signals.

APPLICATION NOTES

Auto Restart Protection

When the fan motor is locked by an external force, the device will temporarily turn off electrical power to the motor and restart automatically when the locked rotor condition is released.

Figure 1: Auto Start Protection

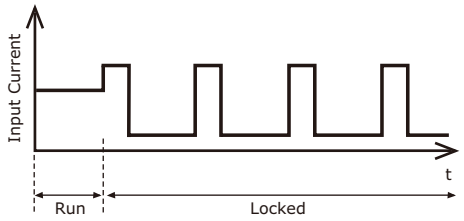

Rotation Detector Signal (White Wire)

The rotation detector signal is used to detect if the fan motor is operating or stopped. The output will be logical low (VL) when fan is operating and be logical high (Vcc) when fan motor is locked. (See Figures 2~3 below).

Figure 2: Rotation Detector Output Waveform

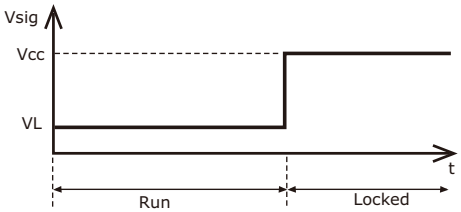

Figure 3: Rotation Detector Output Circuit

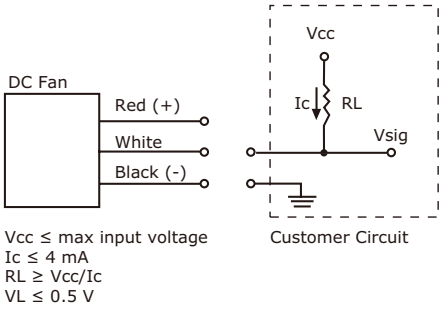

Tachometer Signal (Yellow Wire)

The tachometer signal is for detecting the rotational speed of the fan motor. The output will be a square wave when fan is operating and logical high (Vcc) when fan motor is locked (See Figures 4~5 below). The relationship between RPM & output pulses from the signal wire is as follows.

1 RPM = 2 Pulses

Figure 4: Tachometer Output Waveform

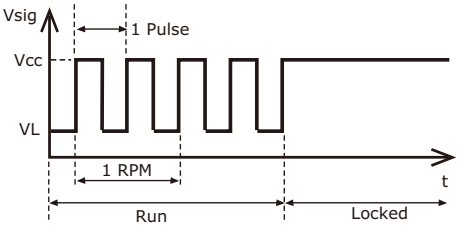

Figure 5: Tachometer Output Circuit

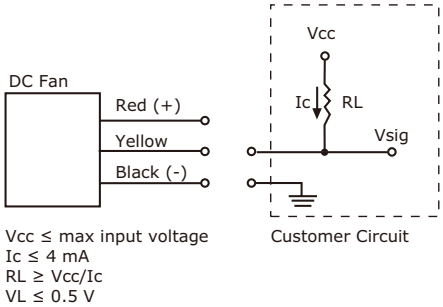

SAFETY CONSIDERATIONS

1. Do not use or operate this fan in excess of the limitations set forth in this specification. Same Sky is not responsible for the non-performance of this fan and/or any damages resulting from its use, if it is not used or operated in accordance with the specifications.
2. Same Sky recommends adding a protection circuit to the product or application in which this fan is installed, such as a thermo-fuse, or current fuse or thermo-protector. The failure to use such a device may result in smoke, fire, electric shock by insulation degradation in cases of motor lead short circuit, overload, or over voltage, and/or other failure.
3. Same Sky recommends installing a protection device to the product or application in which this fan is installed if there is a possibility of reverse connection between Vdc (+) and GND (-). The failue to install such a device may result in smoke, fire, and/or destruction, although these conditions may not manifest immediately.
4. This fan mush be installed and used in compliance with all applicable safety standards and regulations.
5. Use proper care when handling and/or installing this fan. Improper handling of installation of this fan may cause damage that could result in unsafe conditions.
6. Use proper care during installation and/or wiring. Failure to use proper care may cause damage to certain components of the fan including, but not limited to, the coil and lead wires, which could result in smoke and/or fire.
7. Do not use power or ground PWM to control the fan speed. If the fan speed needs to be adjusted, please contact Same Sky to customize the product design for your application.
8. For critical or extreme environments, including non-stop operation, please contact Same Sky and we will gladly provide assistance with your product selection to ensure an appropriate cooling product for your application.
9. When building your device, please examine thouroughly any variation of EMC, temperature rise, life data, quality, etc. of this product by shock/drop/vibration testing, etc. If there are any problems or accidents in connection with this product, it should be mutually discussed and examined.
10. Use proper care when handling these fans. Components such as fan holders or bearings may be damaged, if touched with fingers or other objects. Additionally, static electricity (ESD) may damage internal circuits of the fan.
11. Do not operate these fans in proximity to hazardous materials such as organic silicon, cyanogens, formalin, phenol, or corrosive gas environments including, but not limited to, H_2S, SO_2, NO_2, or Cl_2.
12. Same Sky recommends that you protect these fans from exposure to outside elements such as dust, condensation, humidity, or insects. Exposure of this fan to such elements may affect its performance and my cause safety hazards. Same Skydoes not warrant against damage to the product caused by outside elements.
13. The fans must be installed properly and securely. Improper mounting may cause harsh resonance, vibration, and noise.
14. Do not store these fans in an environment with high humidity. These fans must be stored in accordance with the specified storage temperature.
15. Same Sky reserves the right to use components from multiple sources at its discretion. The use of components from other sources will not affect the specifications as described herein.
16. The life expectancy of these fans has not been evaluated for use in combination with any end application. Therefore, the life expectancy that relate to these fans are only for reference.

REVISION HISTORY

rev.	description	date
1.0	initial release	07/21/2017
1.01	updated datasheet	12/11/2017
1.02	brand update	02/11/2020
1.03	logo, datasheet style update	08/12/2022
1.04	discontinued rotation detector signal models	09/29/2022
1.05	CUI Devices rebranded to Same Sky	09/12/2024

The revision history provided is for informational purposes only and is believed to be accurate.

Same Sky offers a one (1) year limited warranty. Complete warranty information is listed on our website.

Same Sky reserves the right to make changes to the product at any time without notice. Information provided by Same Sky is believed to be accurate and reliable. However, no responsibility is assumed by Same Sky for its use, nor for any infringements of patents or other rights of third parties which may result from its use.

Same Sky products are not authorized or warranted for use as critical components in equipment that requires an extremely high level of reliability. A critical component is any component of a life support device or system whose failure to perform can be reasonably expected to cause the failure of the life support device or system, or to affect its safety or effectiveness.