CUI Devices is now Same Sky! Learn More

MODEL: CDMG16008-03 | DESCRIPTION: SPEAKER

FEATURES

- 16 mm round frame
- 0.3 W input power
- 8.0 Ohm
- PET cone
- neodymium magnet

SPECIFICATIONS

parameter	conditions/description	min	typ	max	units
input power	max. power: IEC-60268-5, filter 60 s on / 120 s off, 10 cycles at room temp		0.3	0.5	W
impedance	at 1.0 kHz, 1 V	6.8	8	9.2	Ω
resonant frequency	at 1 V	480	600	720	Hz
response				20,000	Hz
sound pressure level	at 0.3 W, 10 cm ave. at 1.0, 1.2, 1.5, 2.0 kHz at 1.0 W, 1 m ave. at 1.0, 1.2, 1.5, 2.0 kHz	79 66	82 69	85 72	dB dB
distortion	at 1.0 kHz, 0.3 W			10	%
buzz, rattle, etc.	must be normal at sine wave between Fo-20 kHz			1.55	V
dimensions	Ø16 x 2.55				mm
magnet	Nd-Fe-B				
material	metal				
cone material	PET				
terminal	solder pads				
operating temperature		-20		55	°C
weight			1.5		g
RoHS	yes				

SOLDERABILITY

parameter	conditions/description	min	typ	max	units
hand soldering	for 3±1 seconds	360	370	380	°C

MECHANICAL DRAWING

units: mm
tolerance: ± 0.5 mm

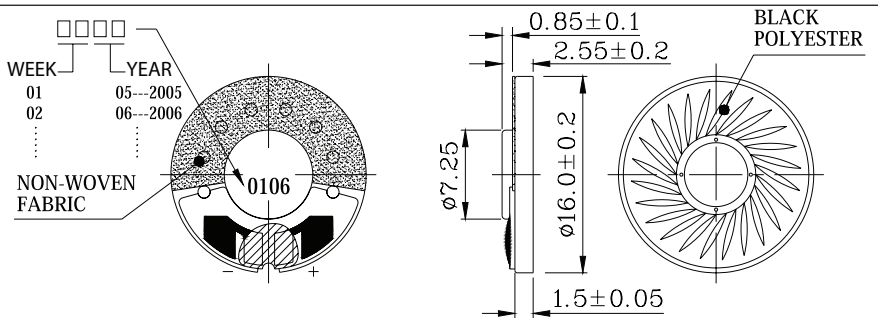

The mylar won't exceed the metal frame when input 0.3W.

RESPONSE CURVES

Frequency Response Curve

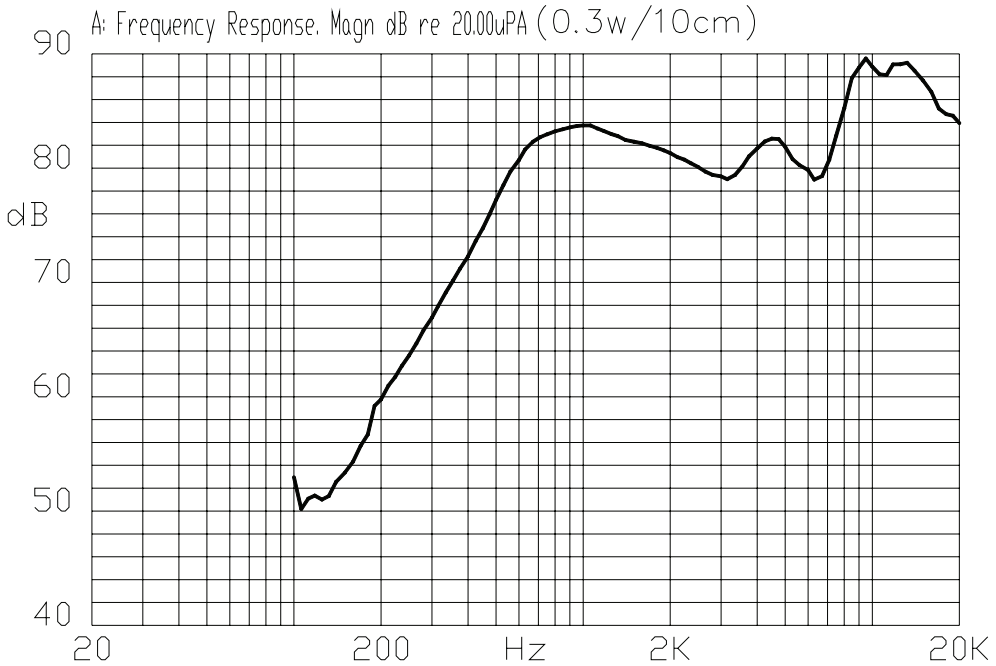

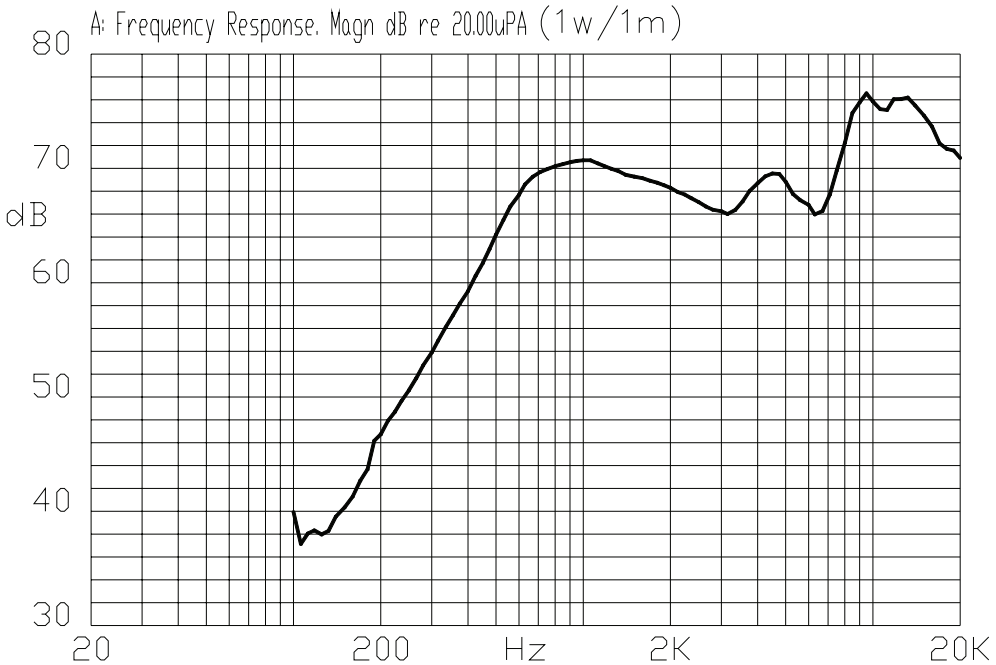

THIELE-SMALL PARAMETERS

parameter	conditions/description	typ
Mechanical Q Factor	Qms	1.6126
Electrical Q Factor	Qes	69.4704
Total Q Factor	Qts	1.576
Compliance Equivalent Volume	Vas	0.0002

Notes: 2. Results represent typical performance in Free Air conditions.

PACKAGING

units: mm

Tray Size: 350 x 235 x 20 mm
Tray QTY: 100 pcs per tray
Carton Size: 355 x 242 x 300 mm
Carton QTY: 2,500 pcs

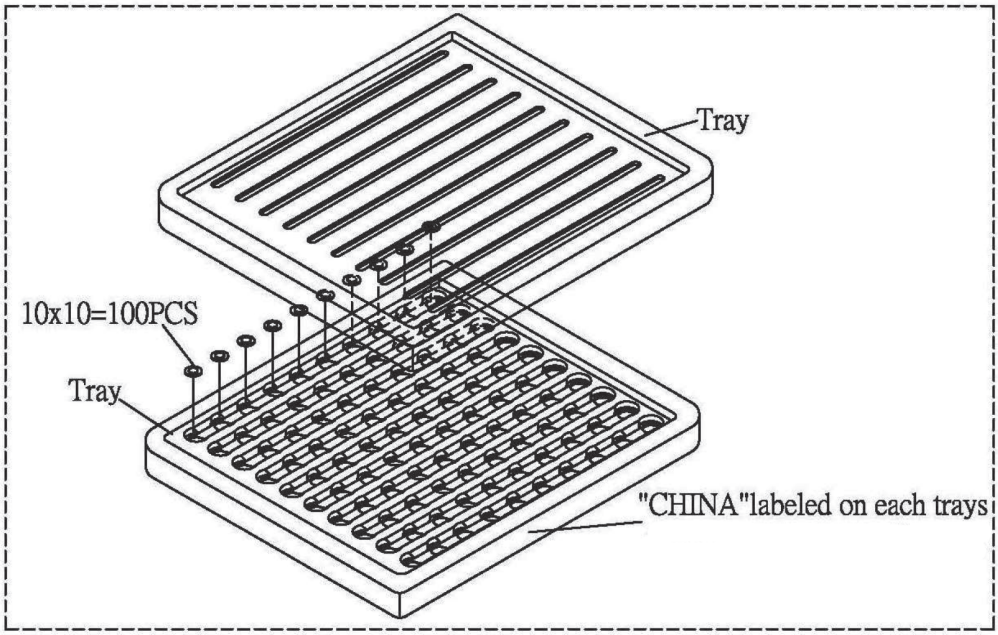

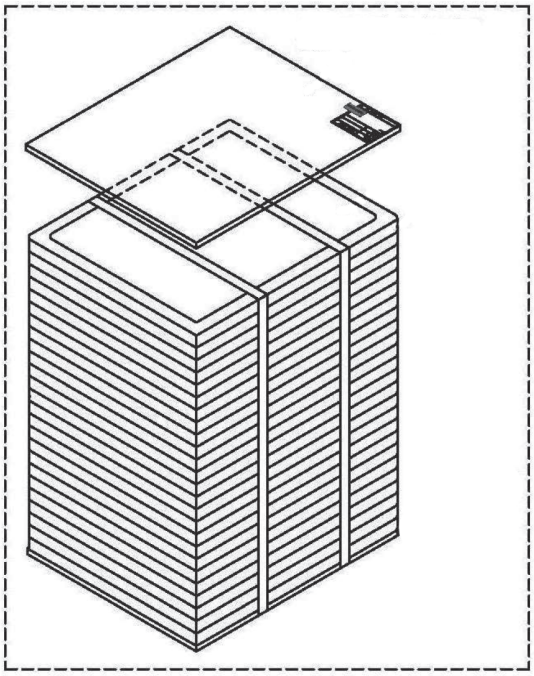

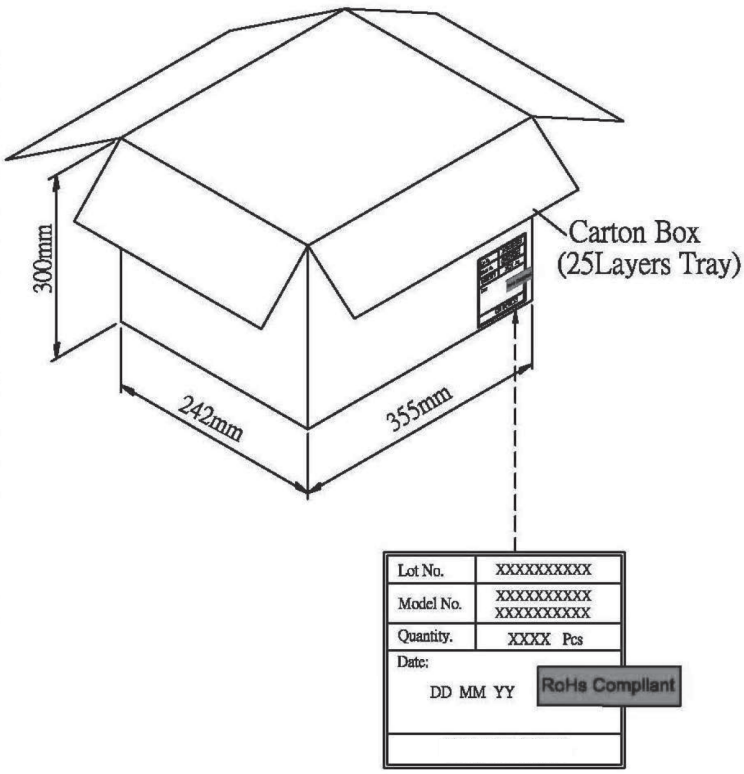

REVISION HISTORY

rev.	description	date
1.0	initial release	10/18/2006
1.01	updated datasheet	02/01/2010
1.02	brand update	04/15/2021
1.03	logo, datasheet style update	08/05/2022
1.04	CUI Devices rebranded to Same Sky	09/11/2024
1.05	added Thiele-Small Parameters	02/07/2025

The revision history provided is for informational purposes only and is believed to be accurate.

Same Sky offers a one (1) year limited warranty. Complete warranty information is listed on our website.

Same Sky reserves the right to make changes to the product at any time without notice. Information provided by Same Sky is believed to be accurate and reliable. However, no responsibility is assumed by Same Sky for its use, nor for any infringements of patents or other rights of third parties which may result from its use.

Same Sky products are not authorized or warranted for use as critical components in equipment that requires an extremely high level of reliability. A critical component is any component of a life support device or system whose failure to perform can be reasonably expected to cause the failure of the life support device or system, or to affect its safety or effectiveness.