REV.	ECN NO.	DATE	SIGN	DESCRIPTION
A	Initial Release	2015/07/13	Mafei	Change Rev.01 To Rev.A

ALTW
CONFIDENTIAL
2015-07-13
R&D DEPT.

ALTW
DCC. DEPT.
CONFIDENTIAL
2015.08.19
ISSUED

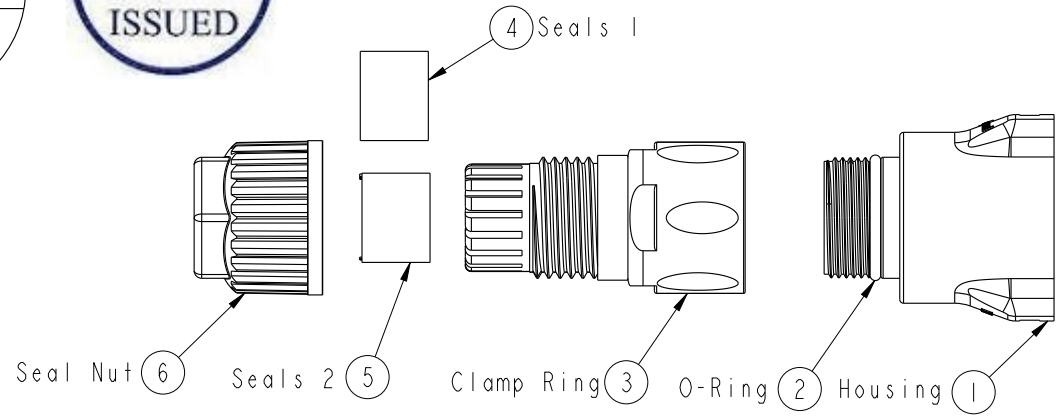

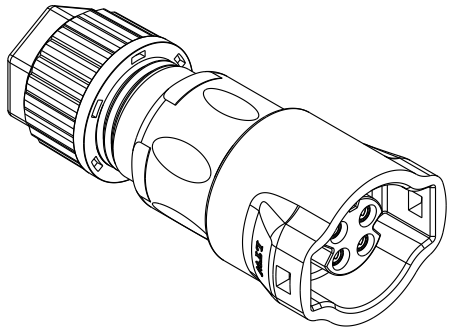

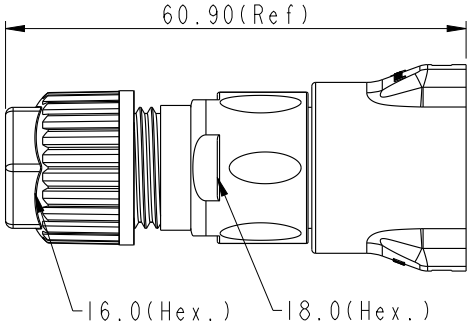

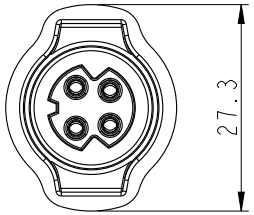

CB-XXBFFC-RL7001

- Middle Size Cuttent Rating 10A
- No. Of Pin(Pin 數)
- For Cable without SR(無網尾)
- Female Connector(母座)
- Female Pin(母Pin)
- Without Cable
- IP67
- Straight(180°)
- Snap in with Latch(彈臂卡合)
- Crimp Type(鉚接式)

Note:
* (QC) Important Dimension To Check.
* Waterproof Rate: IP67 (Mating)
* Housing: M-PPE, Black, UL94 V-0, UL746C fl
* Conductor Current Rating: Max.10A Depends On Wire
* O-Ring: Silicone, Gray, UL94 V-0
* Seals: Silicone, Gray, UL94 V-0
* Clamp Ring: Nylon, Black, UL94 V-0, UL746C fl
* Sealing Nut: Nylon, Black, UL94 V-0, UL746C fl
* Seal 1For Cable OD: ∅4.5mm~∅7.5mm
* Seal 2For Cable OD: ∅7.5mm~∅9.5mm
* Prohibiting the use of place in oils.
* Clamp Ring Recommended Tightening Torque: 4~7 Kgf.cm(0.4~0.7 N.m)
* Sealing Nut Recommended Tightening Torque: 5~10 Kgf.cm(0.5~1 N.m)

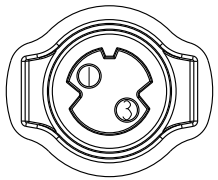

2 PIN
Pin Assignments
Front View

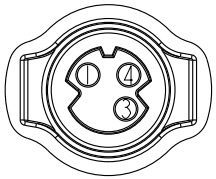

3 PIN
Pin Assignments
Front View

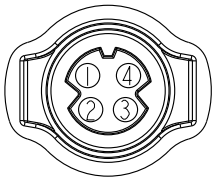

4 PIN
Pin Assignments
Front View

UNIT: mm

TOLERANCE ±0.5

TITLE: ASSY RBL 10A F CONN F PIN			
SCALE: 1:1	SIZE: A4	SHEET: 1 OF 2	
REV.: A	WC-REV.: A.2	(QC): Inspection item	

Amphenol LTW
安費諾亮泰企業股份有限公司

ITEM NO		DRAWN BY	Mafei	DATE	2015-07-13
DWG NO	CB-XXBFFC-RL7001	CHECKED BY	Alex_Lin	DATE	2015-07-13
CUSTOMER	ALTW	APPROVED BY	Jerry	DATE	2015-07-13

FMW10702-01-02A1

THIS DOCUMENT IS SUBJECT TO CHANGE WITHOUT NOTICE. IT IS CONFIDENTIAL AND A PROPERTY OF Amphenol LTW. DISCLOSURE TO THIRD PARTY HAS TO BE AUTHORIZED BY Amphenol LTW.

REV.	ECN NO.	DATE	SIGN	DESCRIPTION

Optional Part: Terminal
P/N: SAF16B-XXG03

- 01: 2000Pcs/Reel
- 02: 500 Pcs Loose
- 03: 100 Pcs Loose

Contact Material: Copper Alloy, Gold Plated
Current Rating: 10A.
Wire Range: 16#~18#

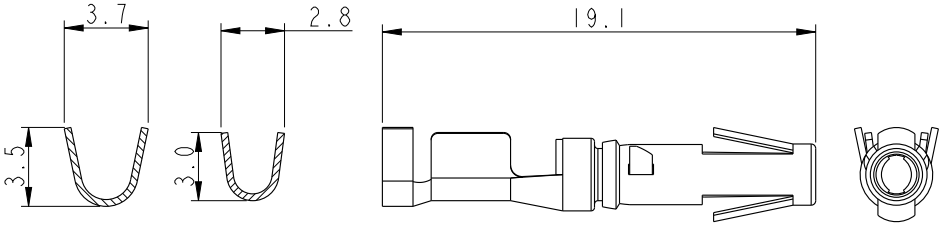

SEC:X2-X2 SEC:X1-X1

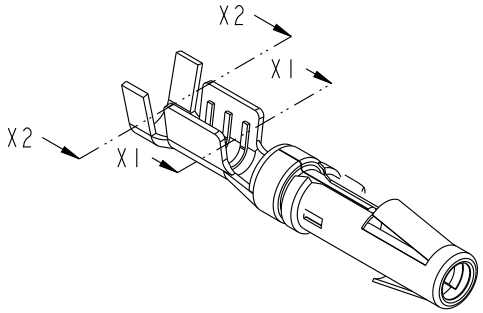

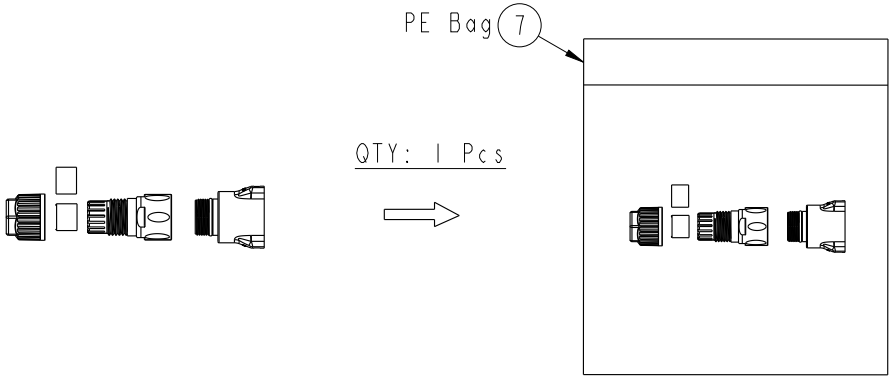

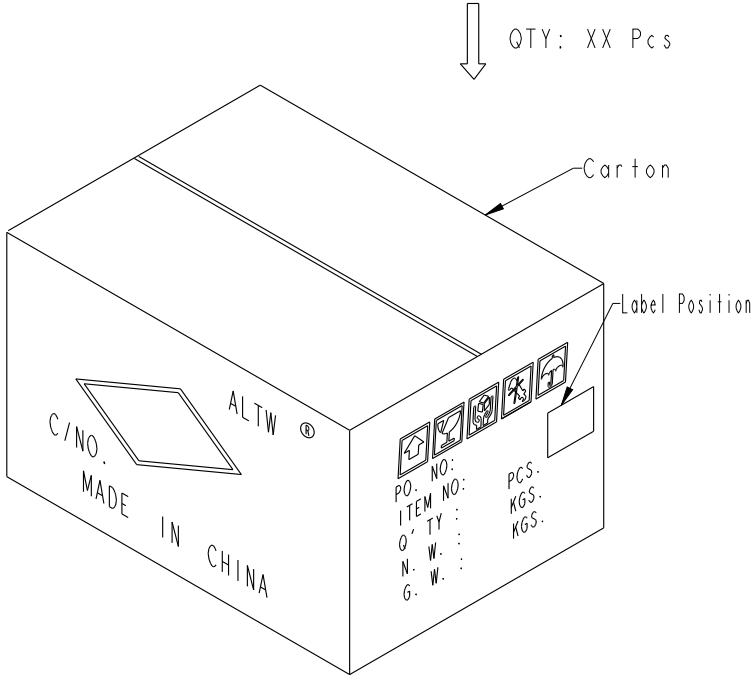

ALTW
DCC. DEPT.
CONFIDENTIAL
2015.08.19
ISSUED

Note:
* One Set Unassembled In One PE Bag.
（每一組未組裝，放置於一個PE袋，並封口）

ALTW
CONFIDENTIAL
2015-07-13
R&D DEPT.

UNIT: mm	TITLE: ASSY RBL 10A F CONN F PIN		ITEM NO	DRAWN BY: Mafei	DATE: 2015/07/13
TOLERANCE .X ±0.25, .XX ±0.1, .XXX ±0.05, ANGLES ±1°	SCALE: 1:1 / SIZE: A4 / SHEET 2 OF 2	Amphenol LTW 安費諾亮泰企業股份有限公司	DWG NO: CB-XXBFFC-RL7001	CHECKED BY: Alex_Lin	DATE: 2015/07/13
	REV.: A / WC-REV.: A.2	(QC): Inspection item	CUSTOMER: ALTW	APPROVED BY: Jerry	DATE: 2015/07/13

THIS DOCUMENT IS SUBJECT TO CHANGE WITHOUT NOTICE. IT IS CONFIDENTIAL AND A PROPERTY OF Amphenol LTW. DISCLOSURE TO THIRD PARTY HAS TO BE AUTHORIZED BY Amphenol LTW.