TAOGLAS

Datasheet

169 MHz VHF Chip Monopole Antenna

Part No:
CA.69

Description

25.2 x 5.1 x 0.8mm CA.69 169MHz 7dBi Chip Antenna

Features:

169 MHz VHF Chip Monopole Antenna
Peak Gain – approx. -7 dBi (on evaluation board)
Efficiency 10~15% (on evaluation board)
Low Profile
Dimensions: 25.2 x 5.1 x 0.8mm
RoHS & REACH Compliant

1.	Introduction	3
2.	Specification	4
3.	Antenna Characteristics	5
4.	Radiation Patterns	8
5.	Mechanical Drawing	10
6.	Solder Reflow Profile	11
7.	Packaging	12
8.	Antenna Integration Guide	13
9.	Application Note	22
	Changelog	29

Taoglas makes no warranties based on the accuracy or completeness of the contents of this document and reserves the right to make changes to specifications and product descriptions at any time without notice. Taoglas reserves all rights to this document and the information contained herein. Reproduction, use or disclosure to third parties without express permission is strictly prohibited.

1. Introduction

The CA.69 Chip Antenna from Taoglas, 169 MHz is specifically designed for VHF 169MHz band applications. It is a high efficiency miniature SMD edge mounted antenna with small footprint requirement. This chip antenna uses the main PCB as its ground plane, thereby increasing antenna efficiency. It is tuned for different PCB sizes by simply changing the value of the matching circuit. CA.69 antenna electrical properties are symmetrical therefore the antenna can be soldered to the board from either side.

This antenna is delivered on tape and reel. Small low frequency antennas such as CA.69 need to be carefully tuned and integrated into devices to perform optimally given the narrow band tuning required, so contact your regional Taoglas sales office for support on gerber review of your layout, advice on ground-plane layout and transmission line design. Taoglas also recommends we test your final device prototype with CA.69 on board and provide final matching values.

Taoglas has tested the CA.69 mounted in realistic conditions in metal or semi metal meter housings with the latest high power modules from Telit and achieved read ranges of more than one hundred metres.

Applications:
- VHF Band Applications

For further optimization to customer-specific device environments and for support to integrate and test this antennas performance in your device, contact your regional Taoglas Customer Services Team.

2. Specification

Electrical	
Frequency (MHz)	169 MHz
Bandwidth (MHz)	8 (under -10dB Return Loss)
VSWR	2 max.
Impedance (Ω)	50Ω
Polarization	Linear
Radiation Pattern	Omni

Mechanical	
Dimensions (mm)	25.2 x 5.1 x 0.8
Ground plane (mm)	110 x 55 (Recommended)
Material	FR4

Environmental	
Operation Temperature	-40°C to 85°C
Storage Temperature	-40°C to 85°C
Relative Humidity	20% to 70% RH
Moisture Sensitivity	3

3. Antenna Characteristics

3.1 Test Setup

*The antenna tuning depends on different antenna ground plane application. Taoglas provides CAD.A.69 and CAD.B.69 evaluation boards to show performance when antenna is parallel mounted to the ground plane or when it is orthogonally mounted to the ground-plane.

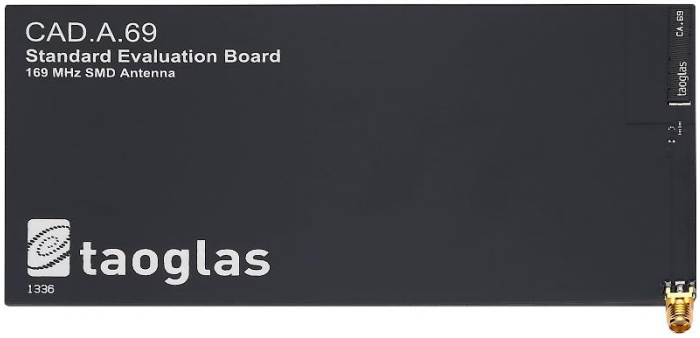

3.2 Return Loss

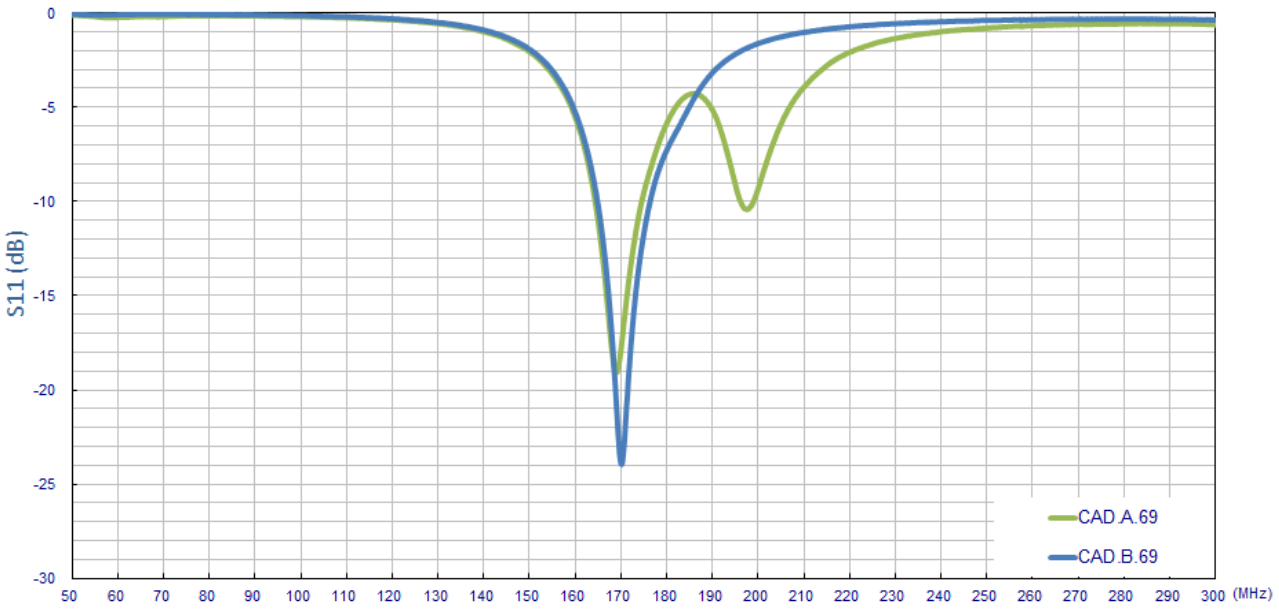

3.3 Efficiency

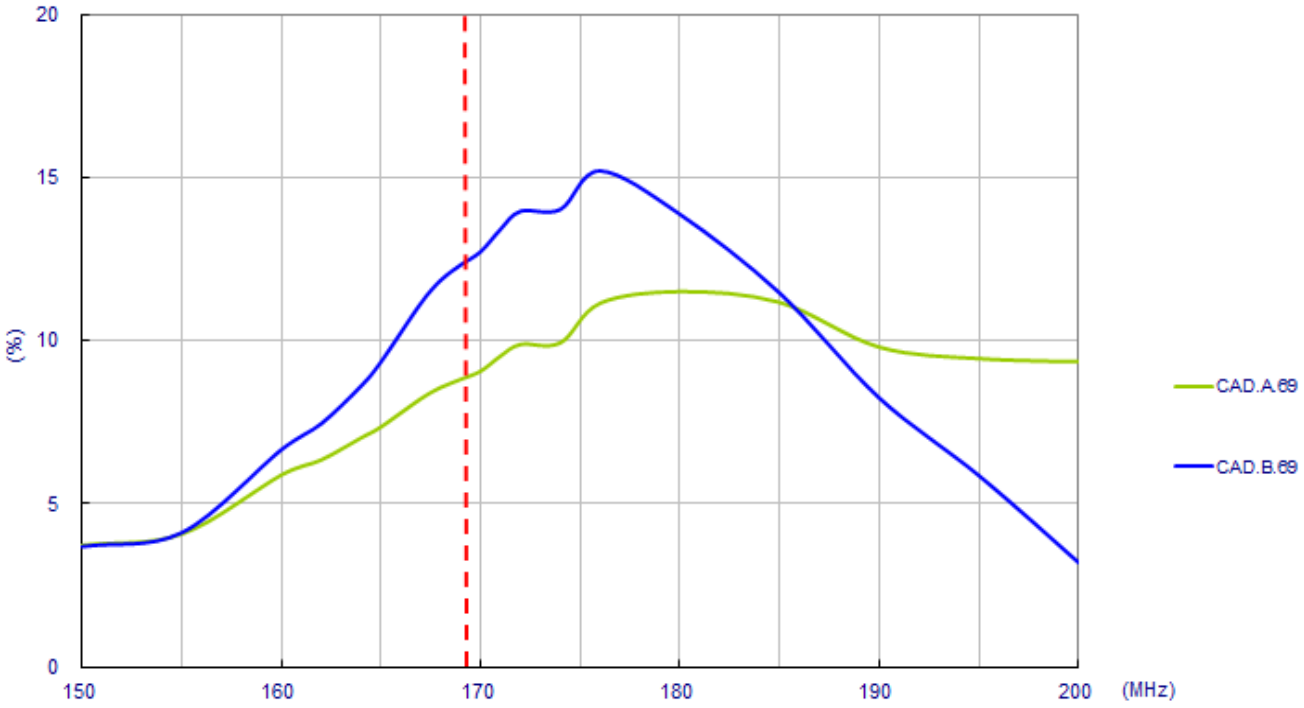

3.4 Peak Gain

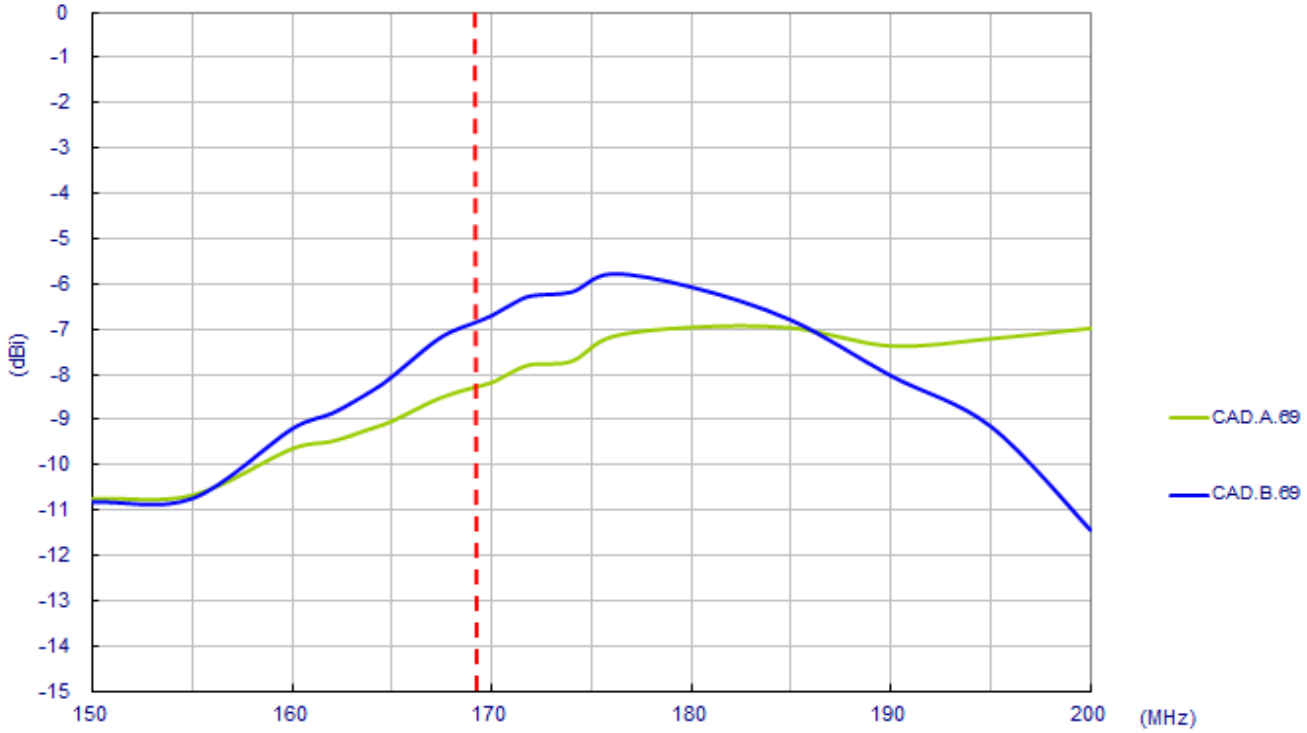
0
-1
-2
-3
-4
-5
-6
-7
-8
-9
-10
-11
-12
-13
-14
-15
(dBi)
150
160
170
180
190
200
(MHz)
CAD.A.69
CAD.B.69

4. Radiation Patterns

4.1 Test Setup

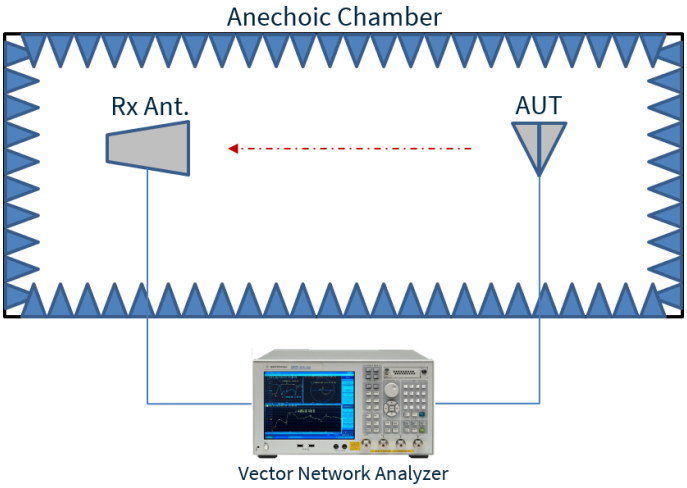

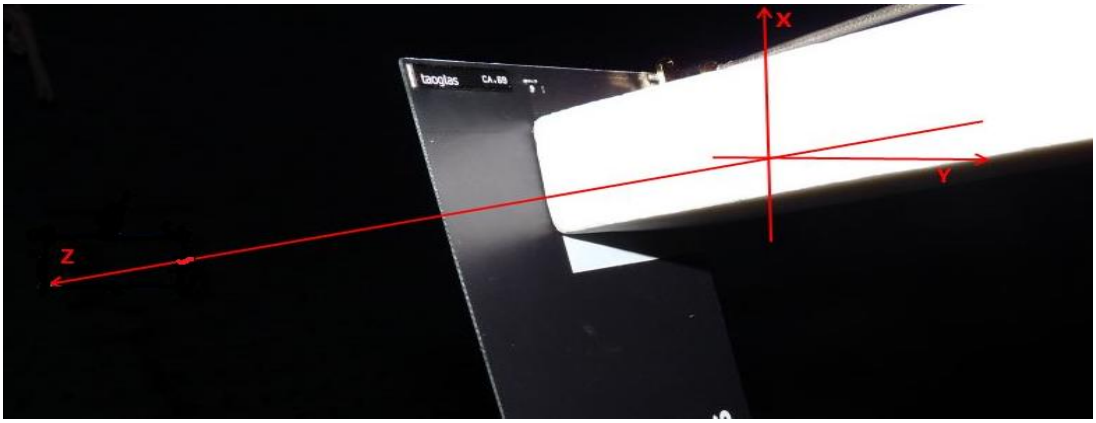

CAD.A.69

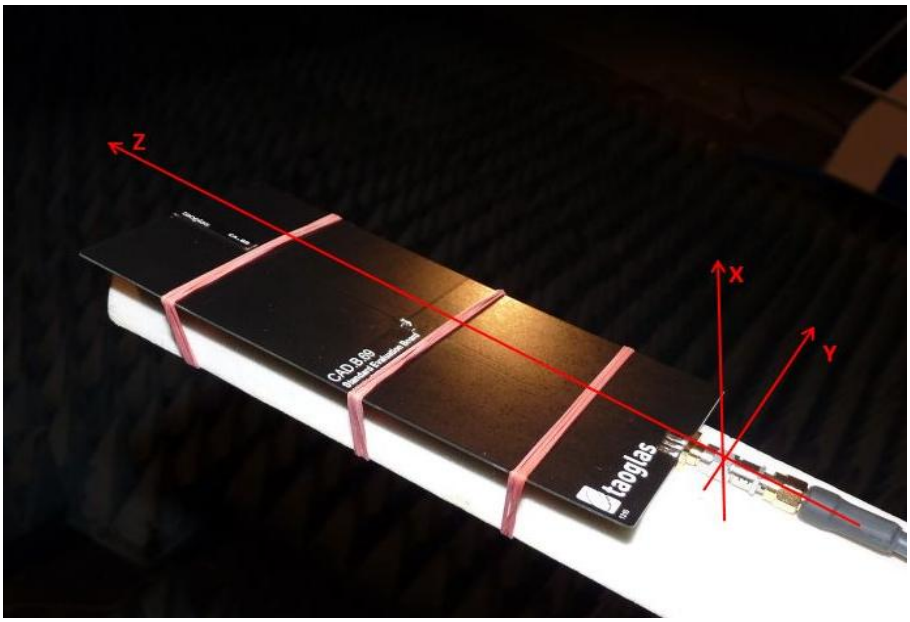

CAD.B.69

4.2 Patterns at 169 MHz

XZ Plane	YZ Plane	XY Plane
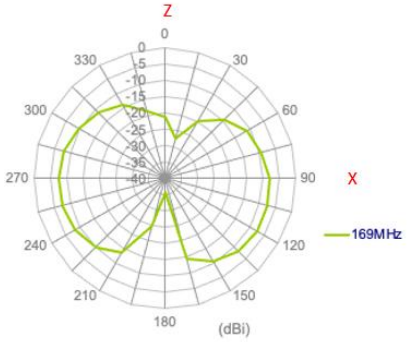	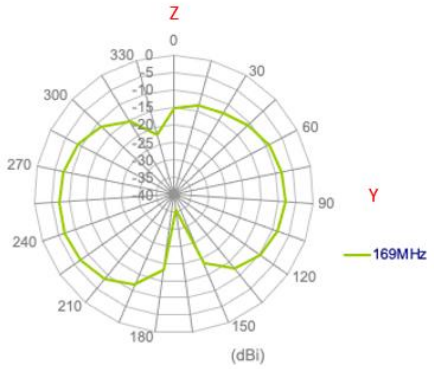	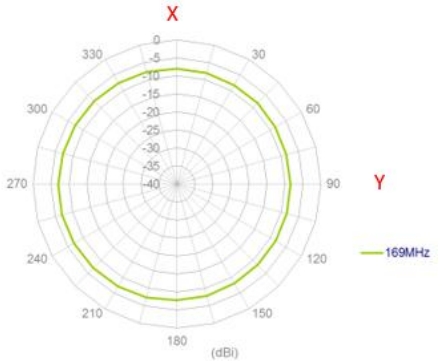

5. Mechanical Drawing

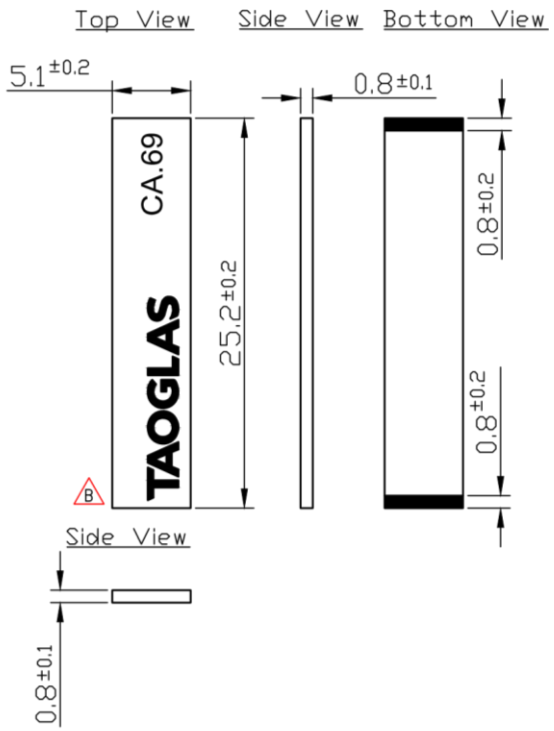

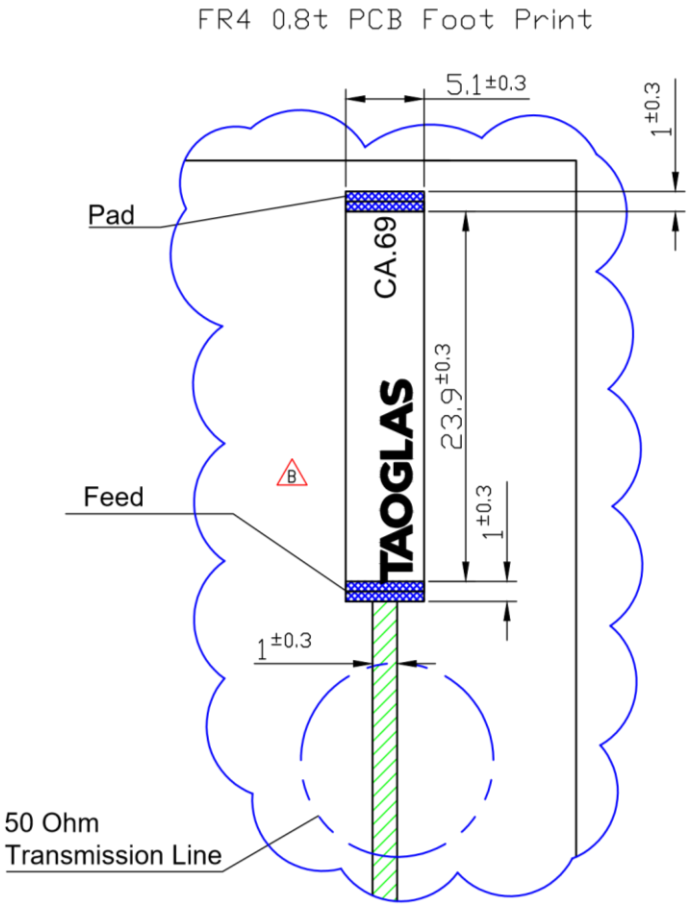

Note:
1.Ni Plated Area
2.Logo & Text Ink Printing : White
3.Clearance Area
4.Copper Area
5.Solder Area

6. Solder Reflow Profile

The CA.69 can be assembled by following the recommended soldering temperatures are as follows:

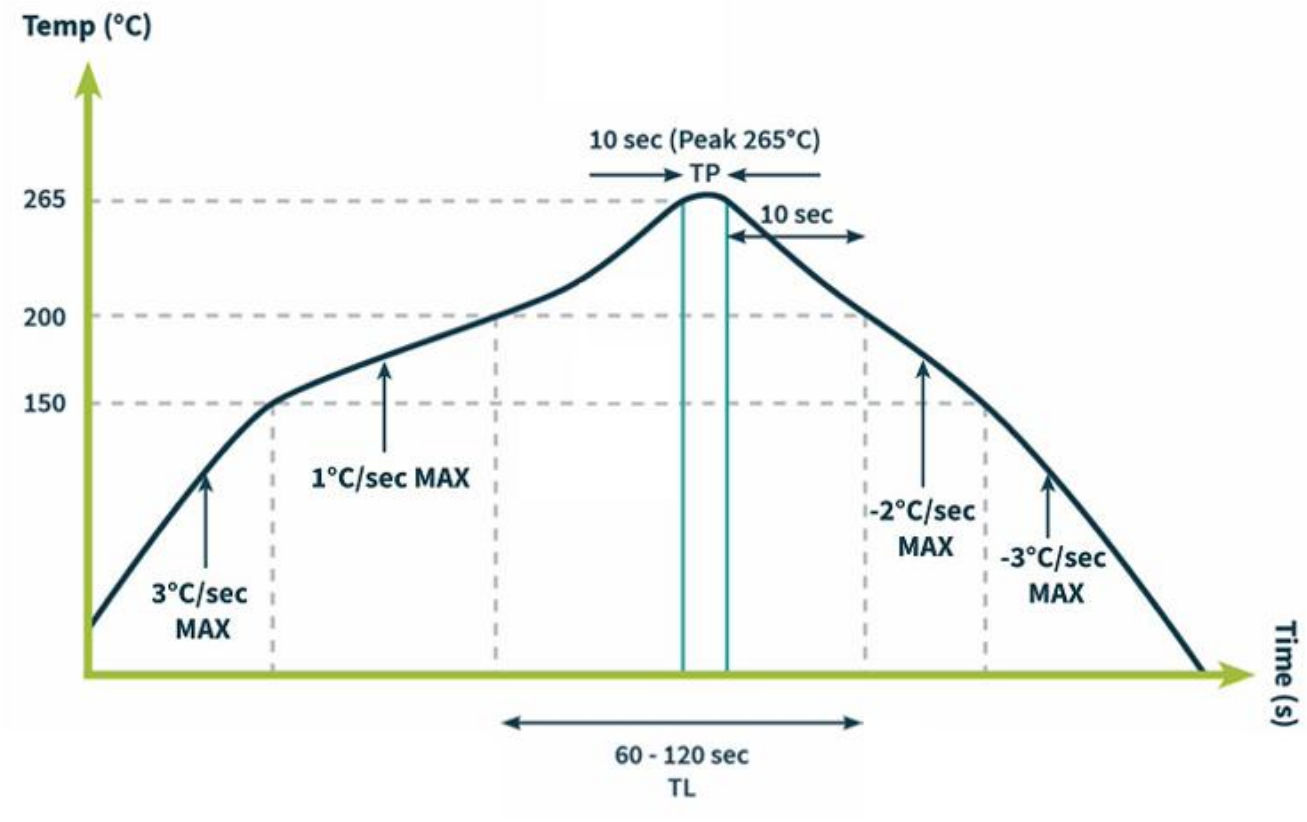

*Temperatures listed within a tolerance of +/- 10º C

Smaller components are typically mounted on the first pass, however, we do advise mounting the CA.69 when placing larger components on the board during subsequent reflows.

Note: Soldering flux classified ROL0 under IPC J-STD-004 is recommended.

7. Packaging

CA.69
1000 pcs / Reel

1pcs/ Vacuum bag

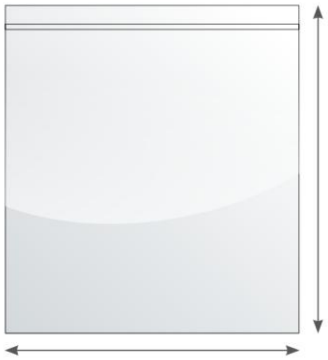

3000 pcs / Carton
Carton(mm): 350x340x200

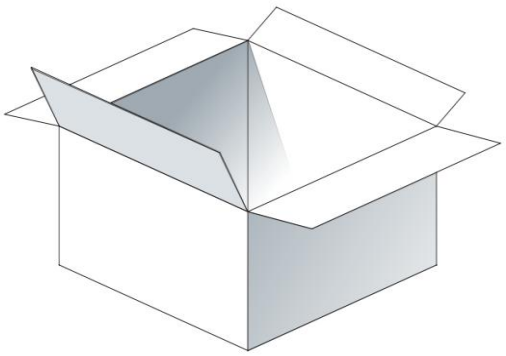

8. Antenna Integration Guide

The following is an example on how to integrate the CA.69 into a design. This antenna has 2 pins, where one pin is used for the RF Feed. Taoglas recommends using a minimum of 159.5x80mm ground plane (PCB) to ensure optimal performance.

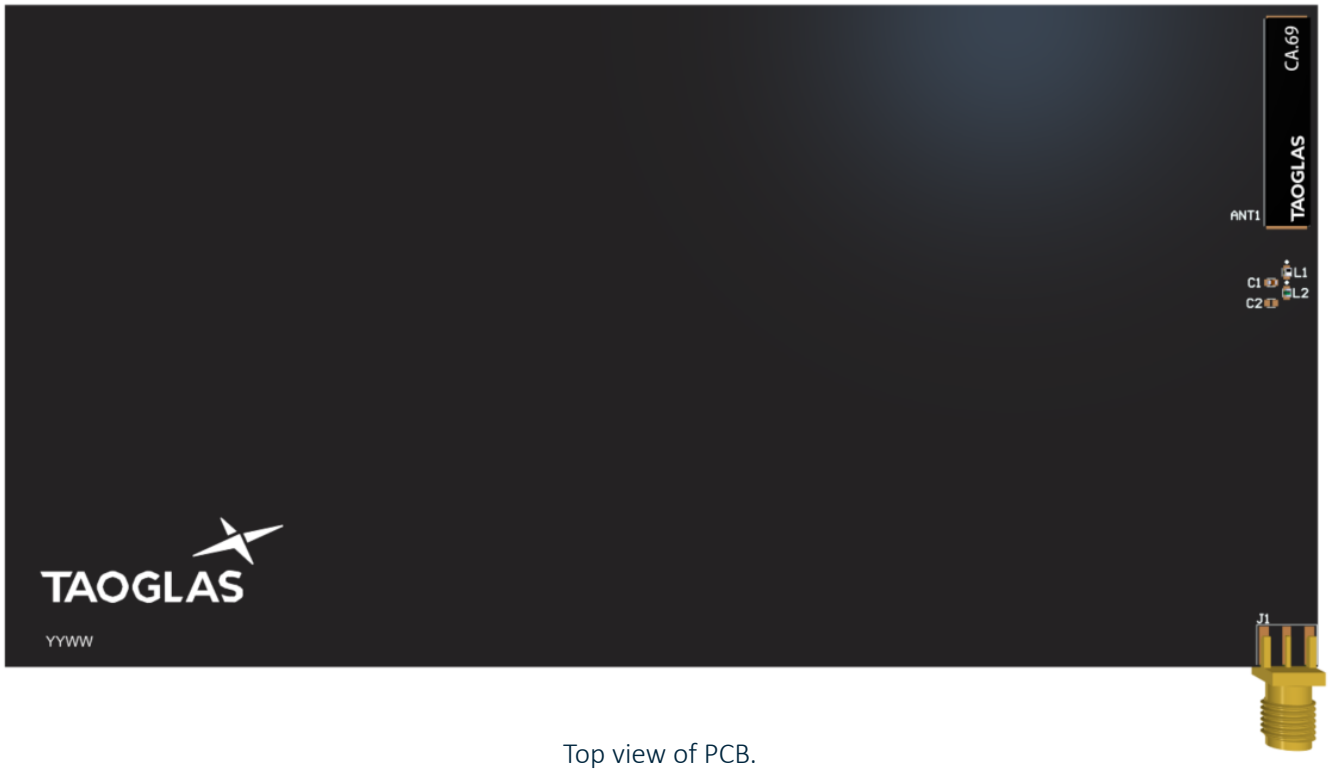

Top view of PCB.

Please find the Integration files in Altium, 2D formats and the 3D model for the CA.69 here:
https://www.taoglas.com/product/ca-69-169mhz-polymer-substrate-chip-antenna

8.1 Schematic Symbol and Pin Definitions

Above is a 3D model of the CA.69 on a PCB.

The circuit symbol for the CA.69 is shown below. The antenna has 2 pins as indicated below.

Pin	Description
1	RF Feed
2	Mechanical, No Connection

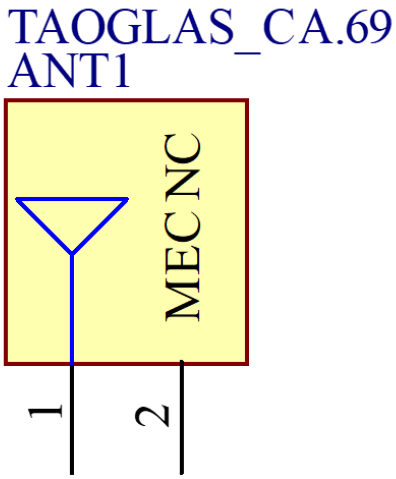

Above is a schematic symbol of CA.69 and table of the pin definitions.

8.2 Schematic Layout

Matching components with the CA.69 are required for the antenna to have optimal performance in the spaces specified in the schematic below. Additional matching components may be necessary for your device, Taoglas recommends incorporating extra component footprints, forming a “Pi” network, for the CA.69.

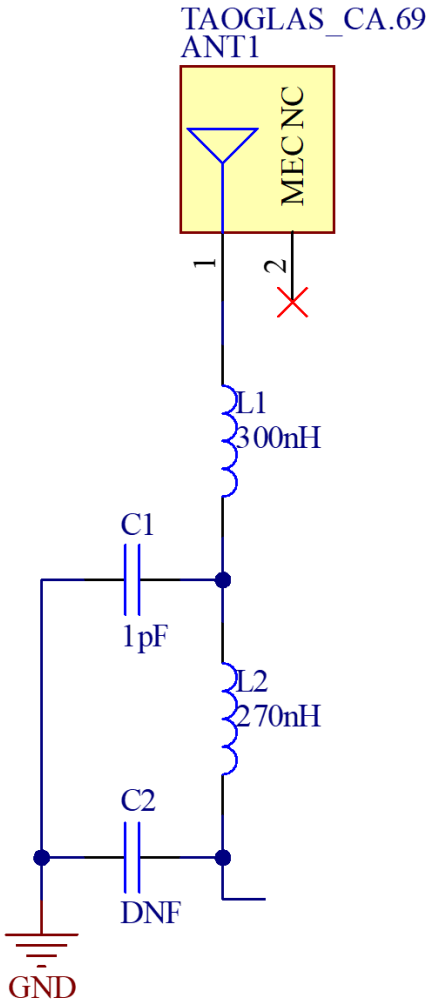

Designator	Type	Value	Manufacturer	Manufacturer Part Number
C1	Capacitor	1pF	Murata	GRM1555C1H1R0CA01D
L1	Inductor	300nH	TDK	MHQ1005PR30GT000
L2	Inductor	270nH	Murata	LQG15HSR27J02D

8.3 Antenna Footprint

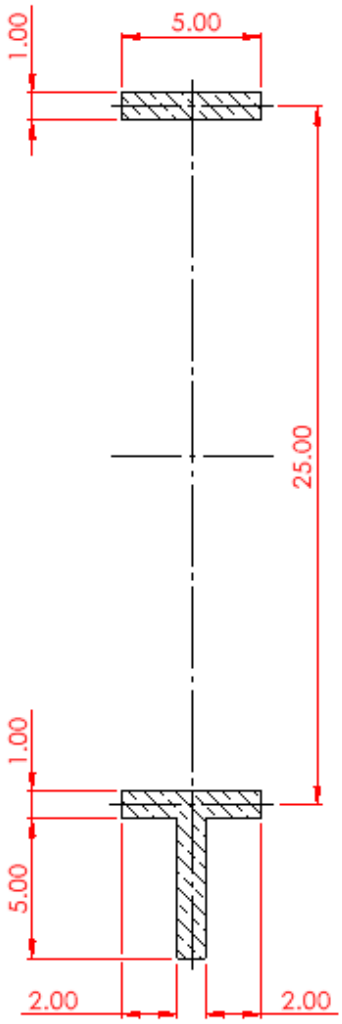

8.4 Top Solder Paste

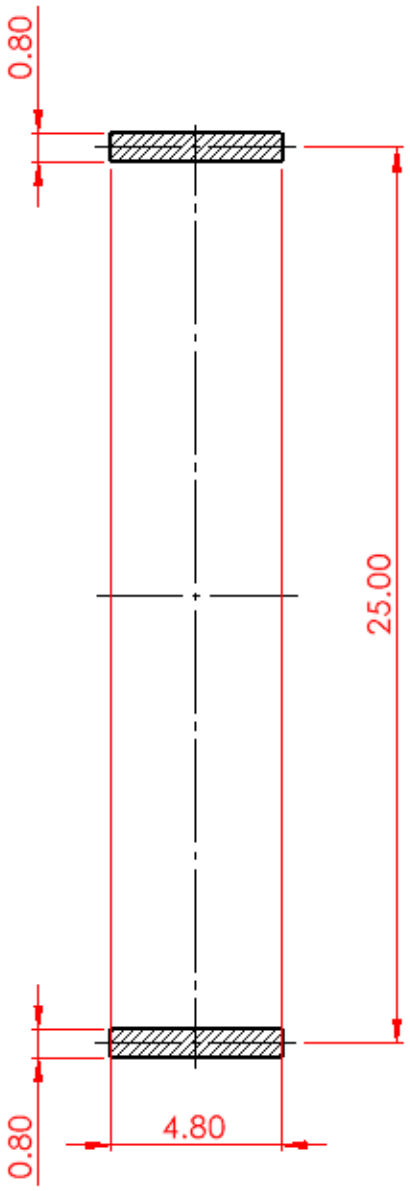

8.5 Top Solder Mask

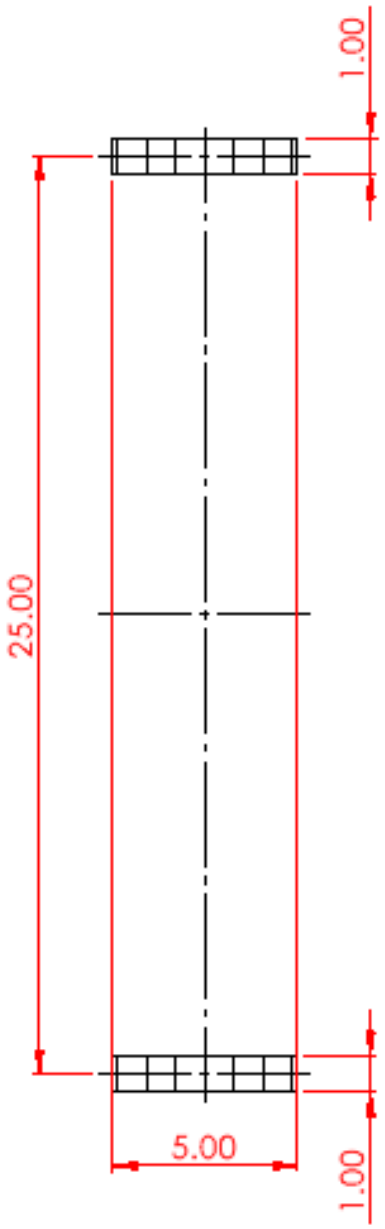

8.6 Copper Clearance

The footprint and clearance on the PCB must comply with the antenna's specification. The PCB layout shown in the diagrams below demonstrates the CA.69 clearance area. The copper keep out area applies to all layers underneath the CA.69.
The copper keep out area extends to 32mm in length and 16mm in width around the Antenna The PCB Edge Clearance should be a minimum of 0.1mm and a maximum of 0.5mm, example below is 0.3mm.

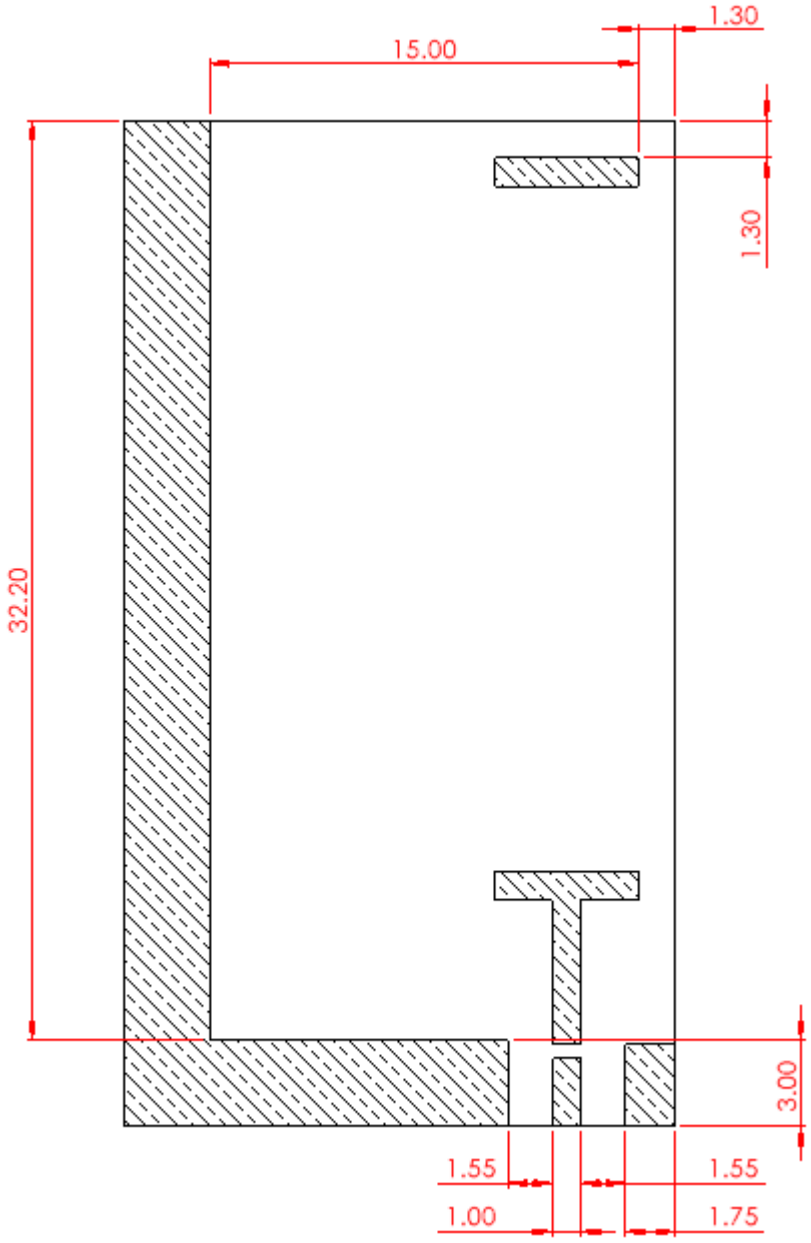

8.7 Antenna Integration

The CA.69 should be placed in the corner of the PCB with the transmission line running down the shorter edge of the PCB, to take advantage of the ground plane. The RF trace must maintain a 50 Ohm transmission line. A “Pi” Matching Network is recommended for the RF transmission line, the values and components for the matching circuit will depend on the tuning needed.

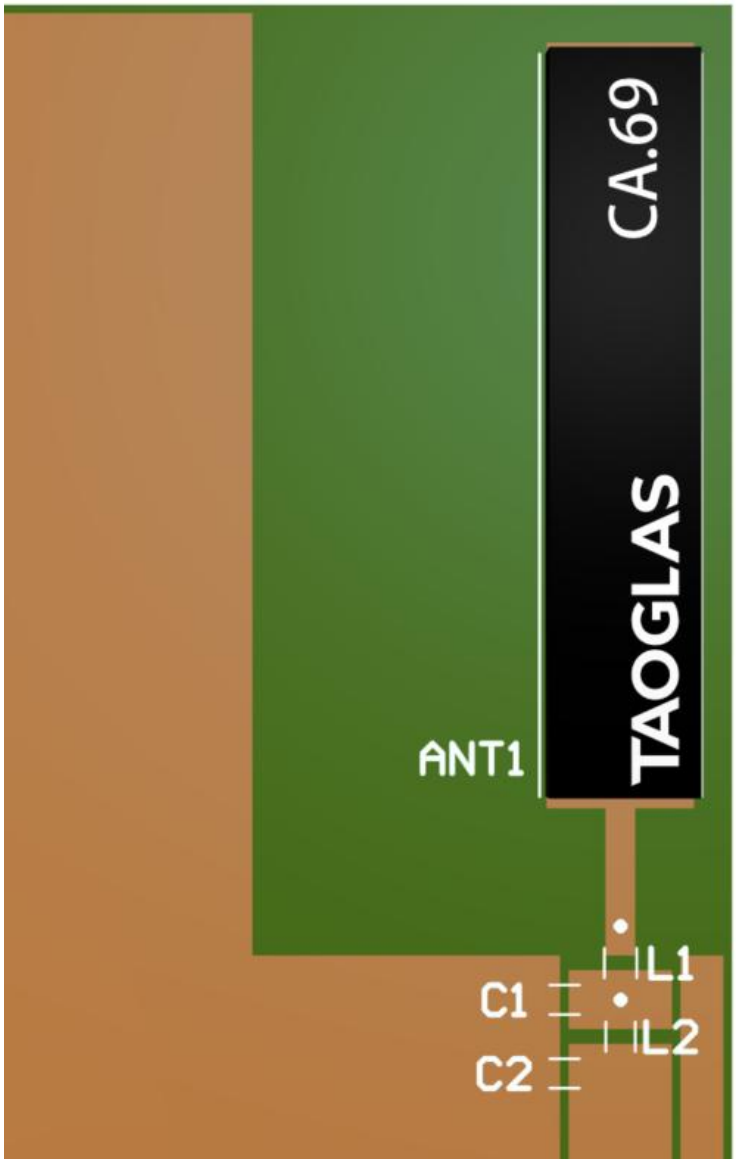

CA.69 antenna mounted on a PCB, showing transmission lines and integration notes.

8.8 Final Integration

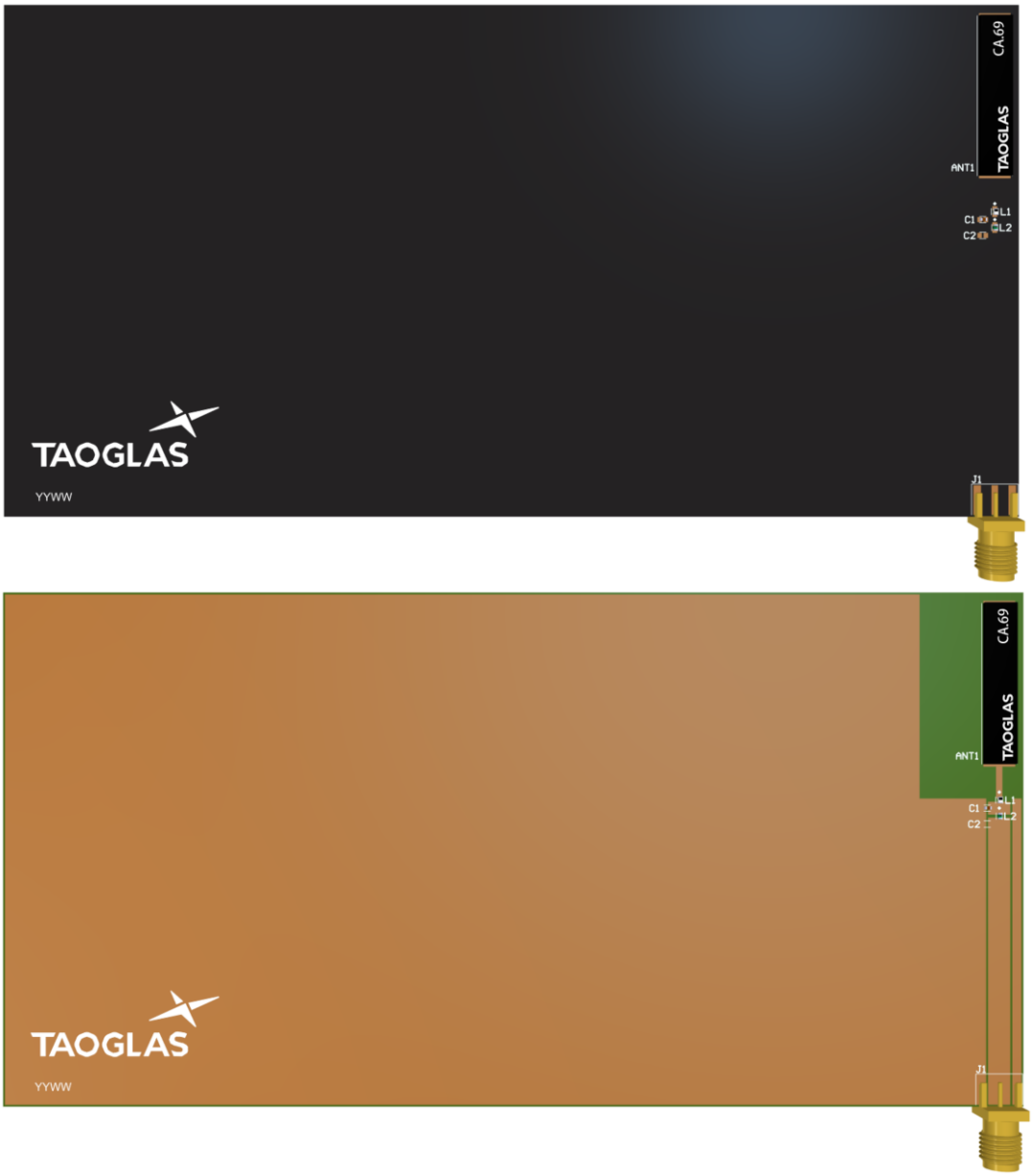

Top Side (CA.69 placement on 159.5 x 80 PCB)

9. Application Note

The following is an example on how to integrate the CA.69 into a design. This antenna has 2 pins, where one pin is used for the RF Feed. Taoglas recommends using a ground plane that extends to 82.5mm.

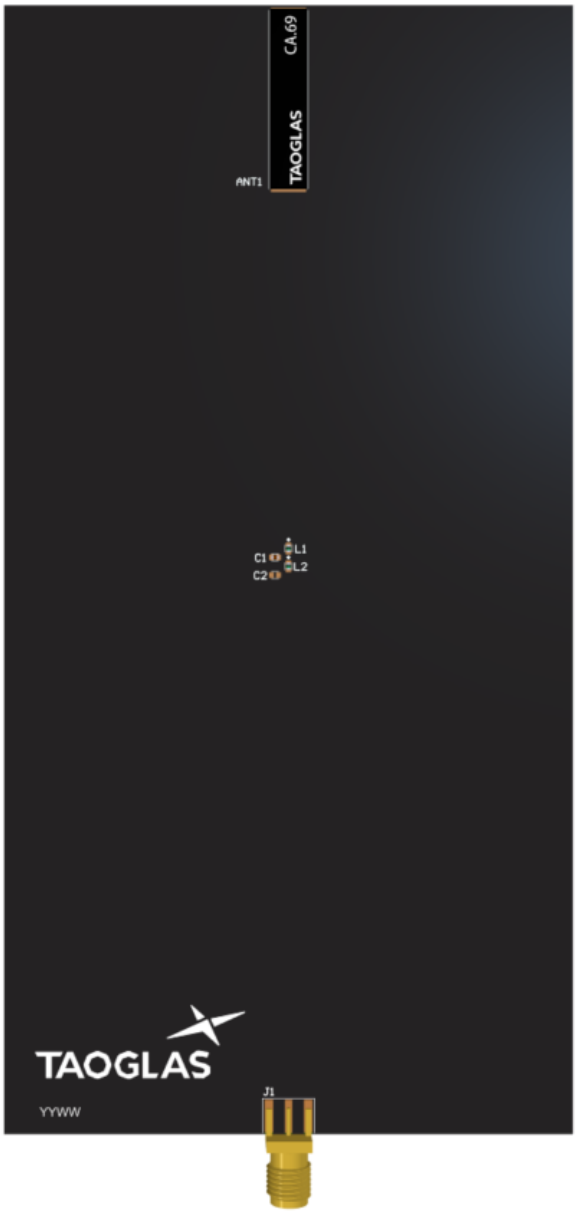

Top view of PCB.

Please find the Integration files in Altium, 2D formats and the 3D model for the CA.69 here:
https://www.taoglas.com/product/ca-69-169mhz-polymer-substrate-chip-antenna/

9.1 Schematic Layout

Matching components with the CA.69 are required for the antenna to have optimal performance in the spaces specified in the schematic below. Additional matching components may be necessary for your device, Taoglas recommends incorporating extra component footprints, forming a “Pi” network, for the CA.69.

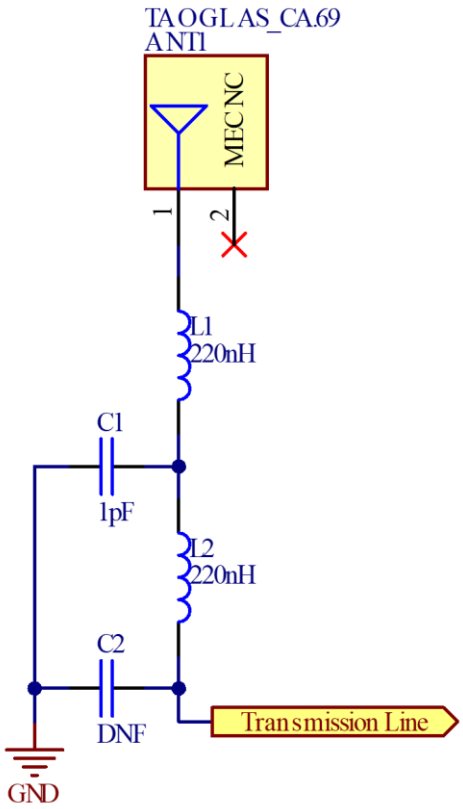

Designator	Type	Value	Manufacturer	Manufacturer Part Number
C1	Capacitor	1pF	Murata	GRM1555C1H1R0CA01D
L1, L2	Inductor	220nH	Murata	LQG15HSR22J02D

9.2 Antenna Integration

The CA.69 should be placed in the corner of the PCB with the transmission line running down the shorter edge of the PCB, to take advantage of the ground plane. The RF trace must maintain a 50 Ohm transmission line. A “Pi” Matching Network is recommended for the RF transmission line, the values and components for the matching circuit will depend on the tuning needed.

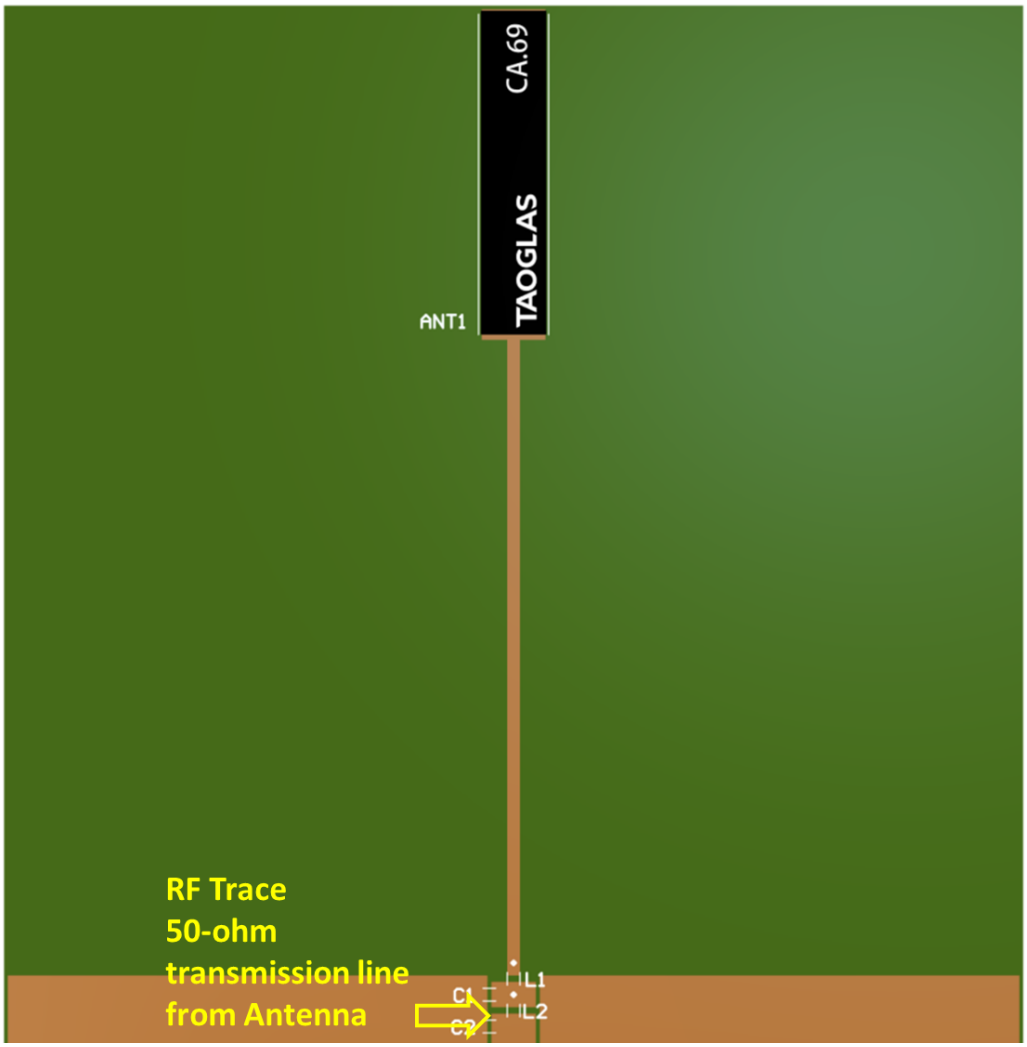

Above is the CA.69 on a PCB, showing integration notes.

9.3 Antenna Footprint

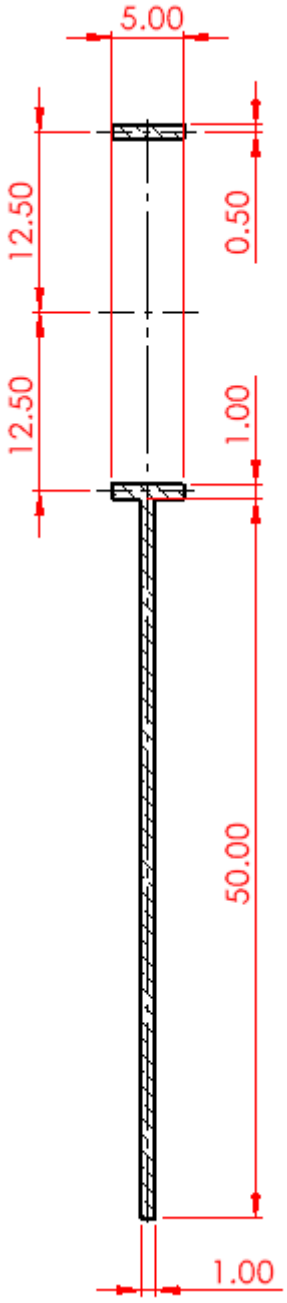

9.4 Copper Clearance

The footprint and clearance on the PCB must comply with the antenna's specification. The PCB layout shown in the diagrams below demonstrates the CA.69 clearance area. The copper keep out area applies to all layers underneath the CA.69.
The copper keep out area extends to 32mm in length and 16mm in width around the Antenna The PCB Edge Clearance should be a minimum of 0.1mm and a maximum of 0.5mm, example below is 0.3mm.

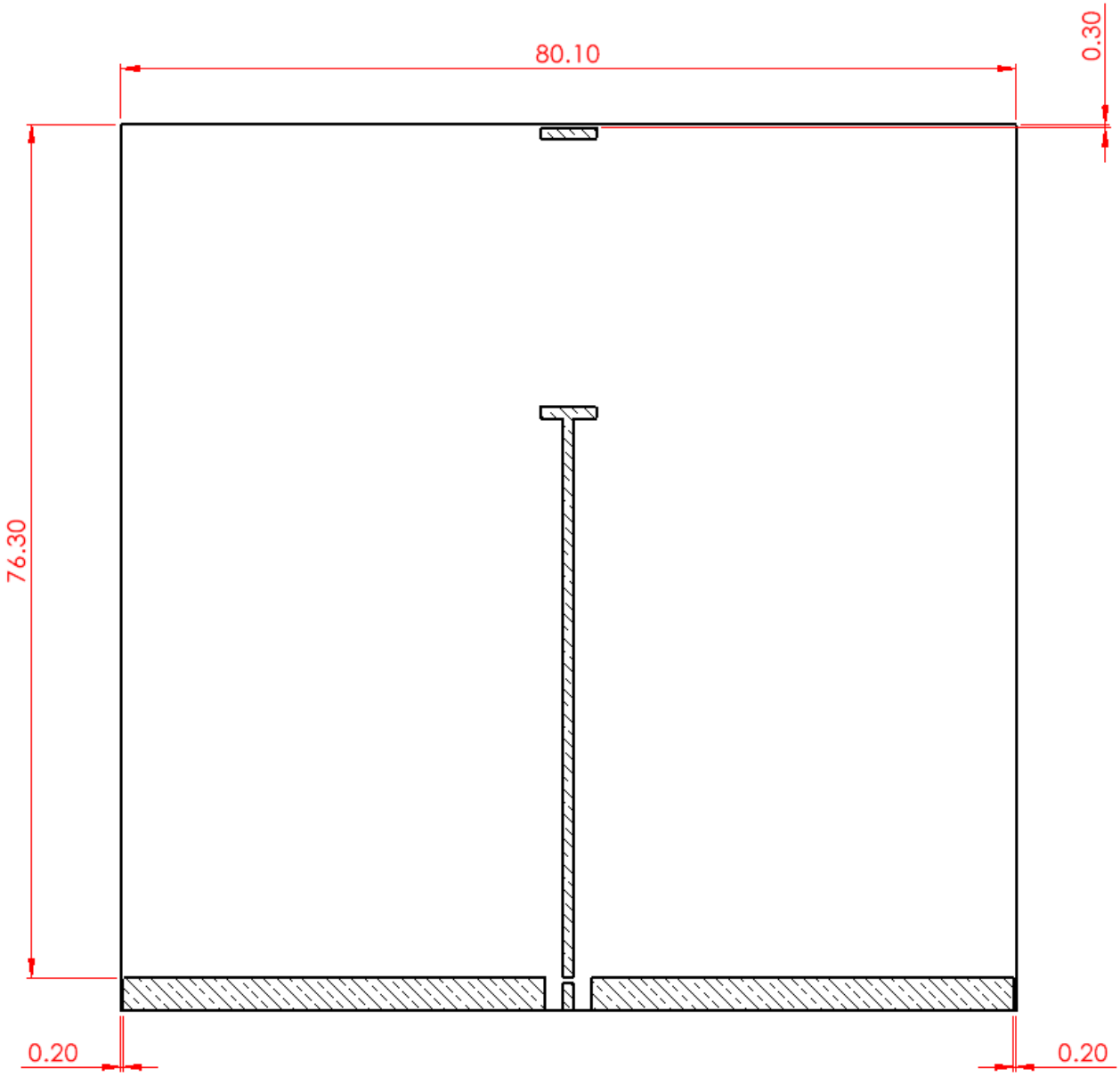

9.5 Antenna Integration

The CA.69 should be placed in the corner of the PCB with the transmission line running down the shorter edge of the PCB, to take advantage of the ground plane. The RF trace must maintain a 50 Ohm transmission line. A “Pi” Matching Network is recommended for the RF transmission line, the values and components for the matching circuit will depend on the tuning needed.

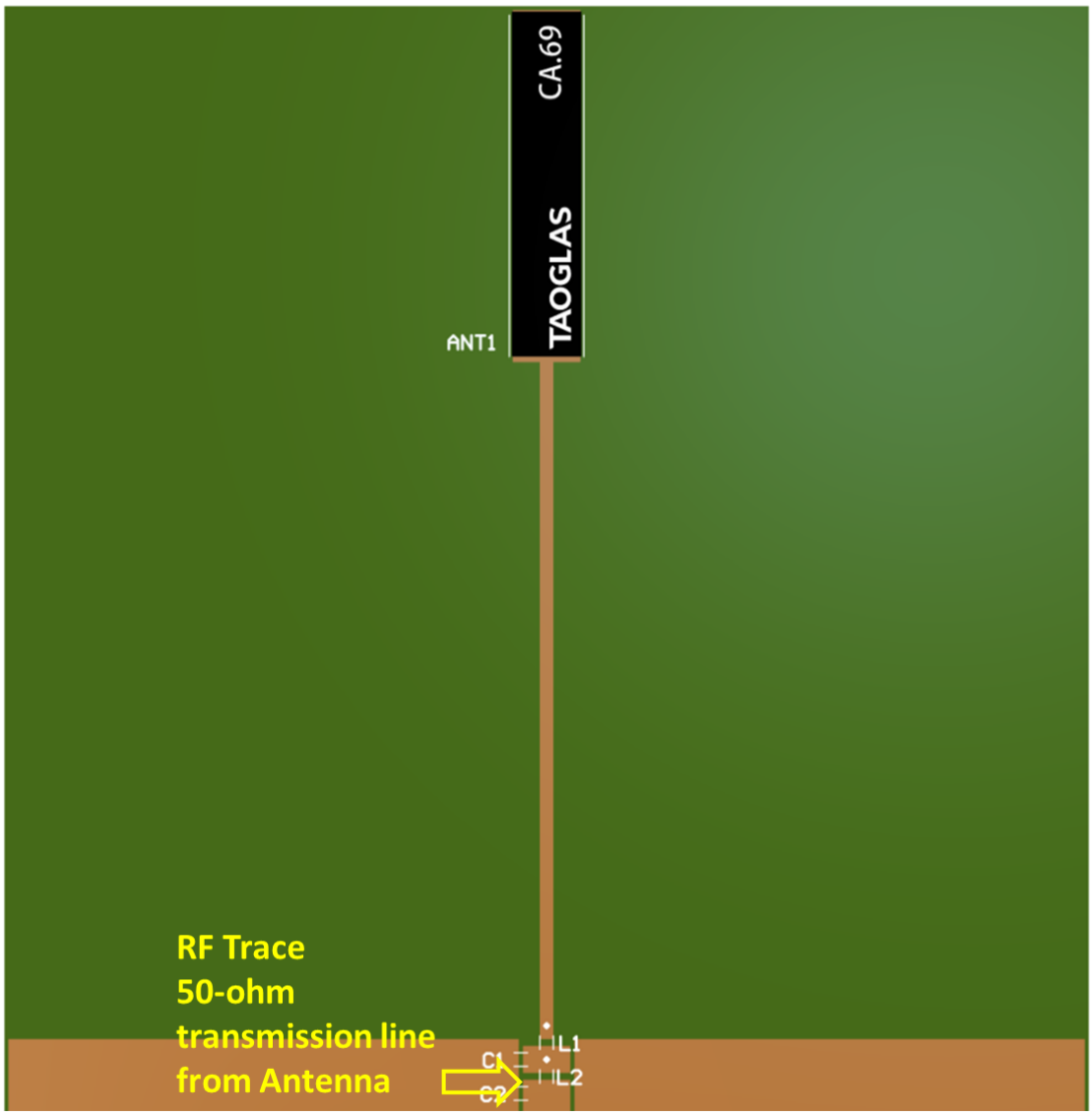

CA.69 antenna mounted on a PCB, showing transmission lines and integration notes.

9.6 Final Integration

The top side image shown below highlights the antenna transmission line. Taoglas recommends using a ground plane that extends to 82.5mm to ensure optimal performance.

Top Side (CA.69 placement on 159.5x80mm PCB)

Changelog for the datasheet

SPE-13-8-077– CA.69

Revision: F (Current Version)	
Date:	2024-11-27
Changes:	Updated Antenna Integration Guide
Changes Made by:	Gary West

Previous Revisions

Revision: E	
Date:	2024-05-30
Changes:	Added moisture sensitivity level information to datasheet
Changes Made by:	Conor McGrath

Revision: D	
Date:	2023-11-23
Changes:	Updated specifications
Changes Made by:	Cesar Sousa

Revision: C	
Date:	2022-02-23
Changes:	Integration Guide added
Changes Made by:	Cesar Sousa

Revision: B	
Date:	2021-10-05
Changes:	Format Change, MSL
Changes Made by:	Erik Landi

Revision: A (Original First Release)	
Date:	2017-10-11
Notes:	Initial Release
Author:	STAFF

TAOGLAS

TAOGLAS®

www.taoglas.com