

SCALE 1:1

TECHNICAL SPECIFICATION :

MAX. CURRENT : 16.0A
INSULATION RESISTANCE : 100Megaohms min.
MAX. CONDUCTOR : 1.50mm²/16AWG
MAX. VOLTAGE : 250V
CONTACT RESISTANCE : ≤15milliohms max.

CABLE DIAMETER RANGE :
PG6-M16 : 6.00-8.00mm
PG11 - G1/2"-M20 : 8.00-10.0mm

OPERATING TEMPERTURE WITH:
NITRILE RUBBER(NBR) GASKET : -40°C TO +90°C
SILICONE : -40°C TO +125°C

ENVIRONMENTAL : IP65
(IP67 AVAIABLE ON REQUEST)

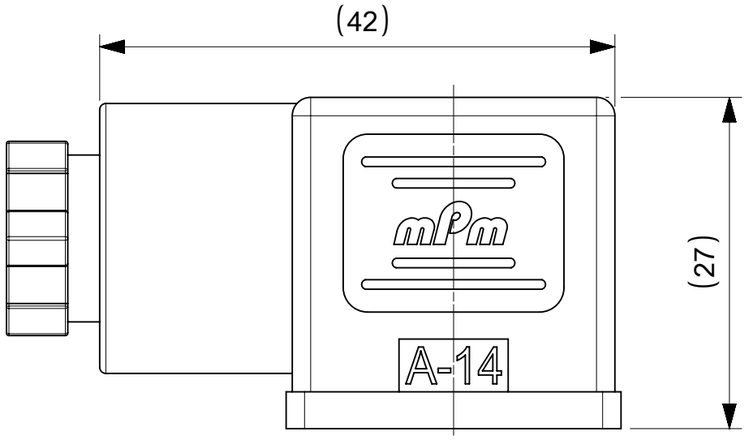

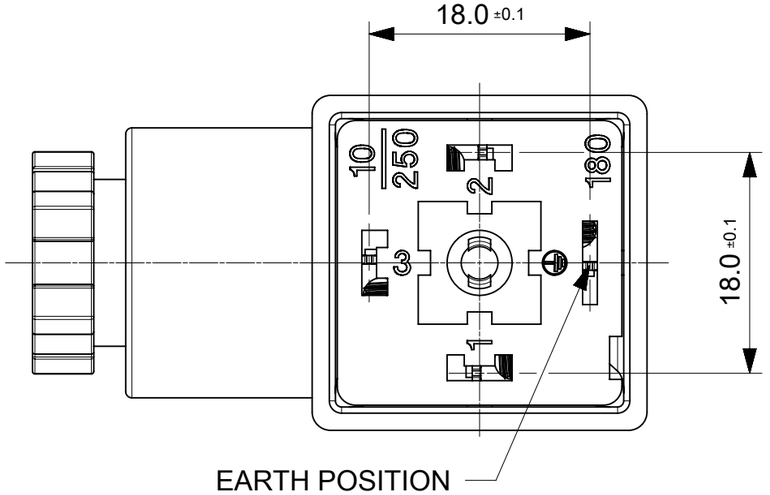

EARTH POSITION
H12 SHOWN

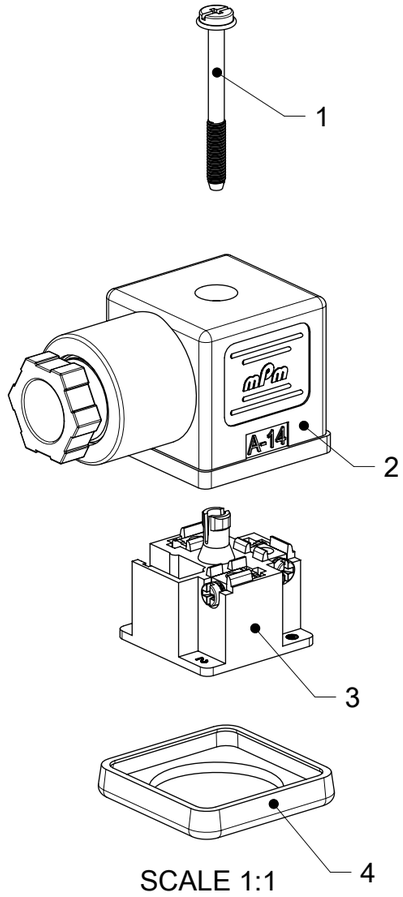

SCALE 1:1

INTEGRATED GASKET

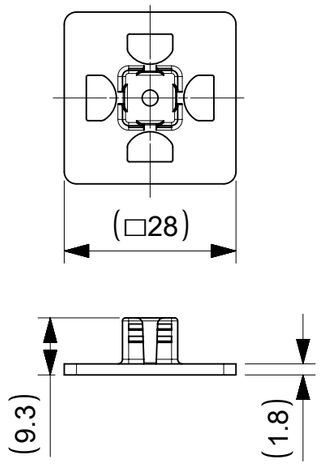

BOM

ITEM	DESCRIPTION	QTY.
1	SCREW	1
2	COVER ASSEMBLY	1
3	INSERT ASSEMBLY	1
4	GASKET	1

PROFILED GASKET

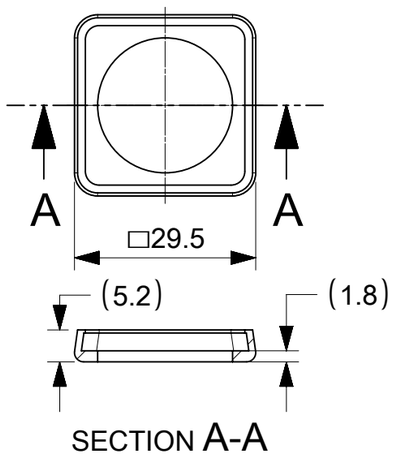

SECTION A-A

FLAT GASKET

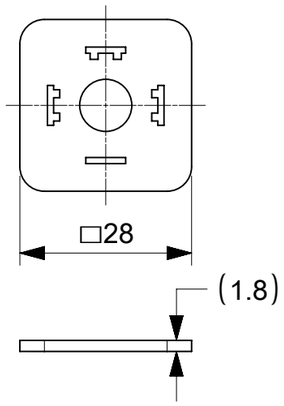

SCREW M3x29

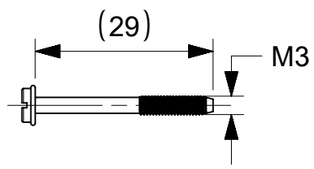

SCREW M3x30 + WASHER

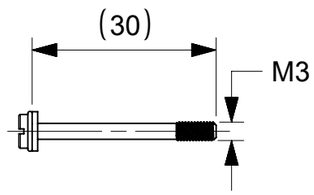

NOTES :

1. PLEASE SEE PDP 1210230229 FOR CURRENTLY CONFIGURED PART NUMBERS.
2. FOR PACKAGING SEE PACKAGING SPEC PK-121023-C18
3. PRODUCT SPEC : SEE PS-121201-001

THIS DRAWING CONTAINS INFORMATION THAT IS PROPRIETARY TO MOLEX ELECTRONIC TECHNOLOGIES, LLC AND SHOULD NOT BE USED WITHOUT WRITTEN PERMISSION

SYMBOLS: E = 0, E = 0, E = 0, S = 0, ▼ = 0, C = 0, ☒ = 0, ■ = 0, V = 0

DIMENSION UNITS: mm
SCALE: 2:1
GENERAL TOLERANCES (UNLESS SPECIFIED)
ANGULAR TOL ± °
4 PLACES ±
3 PLACES ±
2 PLACES ± 0.1
1 PLACE ± 0.2
0 PLACES ±
DRAFT WHERE APPLICABLE MUST REMAIN WITHIN DIMENSIONS

CURRENT REV DESC:

EC NO: 707042
DRWN: APAWLAK01 2022/05/17
CHK'D: RSILLER 2022/05/19
APPR: RSILLER 2022/05/19

INITIAL REVISION:
DRWN: SSM 2019/01/09
APPR: RSILLER 2019/01/15

THIRD ANGLE PROJECTION | DRAWING: A3-SIZE | SERIES: 121023

molex

C18 SERIES ASSEMBLY OPTIONS

PRODUCT CUSTOMER DRAWING

DOCUMENT NUMBER	DOC TYPE	DOC PART	REVISION
1210230229	PSD	000	A1

MATERIAL NUMBER	CUSTOMER	SHEET NUMBER
SEE 1210230229 PDP	GENERAL MARKET	1 OF 2

DOCUMENT STATUS	P1	RELEASE DATE	2022/05/19 08:31:01

FORMAT: ib-prod-A3
REVISION: H
DATE: 2018/01/18

C18 SERIES MATRIX

OPTIONS

C	1	8	X	X	X	X	X	X	X	X

SERIES
C18 - INTERNAL THREAD FORM A

POLES
2 - 2 POLE
3 - 3 POLE

THREAD
09 - PG9
11- PG11
M6 - M6x1.5
M0 - M20x1.5
12 -1/2" GAS,
13 - 1/2" NPTF
39 - PG9 W/STRAIN RELIEF
41 - PG11 W/STRAIN RELIEF

MATERIAL AND HOUSING COLOR:
G - PA6 Grey
N - Black Black
T - Transparent
W - Black UL94 - V0
H - PA6 HEAT PROTECTION
Z - Grey V0

GROUND POSITION :
0 - UNMOUNTED
2 - H12
3 - H3
6 - H6
9 - H9

SCREW AND GASKET
1 - NBR PROFILE GASKET & SCREW
2 - NBR FLAT GASKET & SCREW
3 - WHITE SILICONE PROFILE GASKET & SCREW
4 - WHITE SILICONE FLAT GASKET & SCREW
5 - NBR PROFILE GASKET, NO SCREW
9 - NO GASKET , NO SCREW
0 - NO GASKET , NO SCREW
A - NBR PROFILE GASKET & SCERW + 2mm
B - NBR FLAT GASKET & SCREW + 2mm
C - WHITE SILICONE PROFILE GASKET & SCREW + 2mm
G - NO GASKET & STANDARD SCREW
I - BULK PACK FULLY MOUNTED , NO GASKET
P - INTEGRATED NBR GASKET & IP67 SCREW ASSEMBLED
R - INTEGRATED NBR GASKET & IP97 SCREW NOT ASSEMBLED

NON STANDARD COMPONETS
AF - WITH CENTRE SCREW MOUNTED
14 - SINGLE BAGGED
SA - UL LISTED
19 - PIN No.3 NON CONNECTED/REMOVED
23 - ASSEMBLED SCREWS & GASKET
10 - SPECIAL GROMMET
4S - SPECIAL GROMMET
5A - SINGLED BAGGED 500 IN A BOX
9V - NO SCREW OR GASKET
BM - GOLD TERMINALS
BS - FULLY MOUNTED ALL COMPONENTS IN SEPERATE BAGS
OH - INOX SCREW
P7 - IP67 COMPLIANT

THIS DRAWING CONTAINS INFORMATION THAT IS PROPRIETARY TO MOLEX ELECTRONIC TECHNOLOGIES, LLC AND SHOULD NOT BE USED WITHOUT WRITTEN PERMISSION

SYMBOLS: FA = 0, FC = 0, FB = 0, S = 0, ▼ = 0, C = 0, ☒ = 0, ■ = 0, ▽ = 0

DIMENSION UNITS	SCALE
mm	1:1

GENERAL TOLERANCES (UNLESS SPECIFIED)

ANGULAR TOL	±	°
4 PLACES	±	
3 PLACES	±	
2 PLACES	±	0.1
1 PLACE	±	0.2
0 PLACES	±	

DRAFT WHERE APPLICABLE MUST REMAIN WITHIN DIMENSIONS

CURRENT REV DESC:

EC NO:	707042	
DRWN:	APAWLAK01	2022/05/17
CHK'D:	RSILLER	2022/05/19
APPR:	RSILLER	2022/05/19

INITIAL REVISION:

DRWN:	SSM	2019/01/09
APPR:	RSILLER	2019/01/15

THIRD ANGLE PROJECTION

DRAWING	SERIES
A3-SIZE	121023

molex

C18 SERIES ASSEMBLY OPTIONS

PRODUCT CUSTOMER DRAWING

DOCUMENT NUMBER	DOC TYPE	DOC PART	REVISION
1210230229	PSD	000	A1

MATERIAL NUMBER	CUSTOMER	SHEET NUMBER
SEE 1210230229 PDP	GENERAL MARKET	2 OF 2

DOCUMENT STATUS	P1	RELEASE DATE	2022/05/19 08:31:01

FORMAT: master_tb_mod-A3
REVISION: H
DATE: 2018/01/18