Specification

Part No.	:	**AA.170.301111**
Product Name	:	Magma IP67 GPS/GLONASS/GALILEO/BeiDou External Automotive Antenna 3M RG-174 SMA(M)
Feature	:	Magnetic Mount 3M RG-174 SMA(M) Connector Front-end SAW Cable and connector customizable Automotive TS16949 Quality Dimensions: 53mm*50mm*17mm RoHS & REACH Compliant

1. Introduction

The AA.170 Magma magnetic mount external antenna is ideal for robust, covert installations where durability and small size is paramount. This low profile antenna is tuned for stable operation over GPS-GLONASS-GALILEO-BeiDou frequency bands and is used in the following typical applications

- Advanced telematics and M2M applications
- Fleet management

Axial ratio is 3 at the main GPS band, indicating good right hand circular polarization, which increases location accuracy and speed of lock in the GNSS system. Standard cable and connector version is 3 meter RG174 and SMA(M). A front-end SAW reduces out-band interference from any nearby wireless transmitters, helping prevent LNA compression and burnout. The Magma antenna is manufactured in first tier TS16949 automotive approved facility, with full PPAP and IMDS documentation available.

Cable length and connector type are customizable upon request. Adhesive mounting version is also available upon request. For permanent installations, the AA.170 can also be screw-mounted using the optional MB.A.MX1 screw-mount bracket. Contact your regional Taoglas customer support team for more information.

2. Specification Table

ELECTRICAL			
Center Frequency	1561.098±2.046MHz	1575.42±1.023 MHz	1602±8 MHz
Antenna Gain	+5.55 dBi(typ.) @zenith XZ-Plane +5.73 dBi(typ.) @zenith YZ-Plane	+4.38 dBi(typ.) @zenith XZ-Plane +4.46 dBi(typ.) @zenith YZ-Plane	+5.98 dBi(typ.) @zenith XZ-Plane +5.89 dBi(typ.) @zenith YZ-Plane
Axial Ratio	9.24 dB(typ) @zenith	3.01 dB(typ) @zenith	5.94 dB(typ) @zenith
Polarization	RHCP		

LNA Electrical Properties			
Frequency	GPS/GALILEO: 1575.42±1.023 MHz GLONASS: 1602±8 MHz for GLONASS BeiDou: 1561.098±2.046 MHz		
Impedance	50 Ω		
VSWR	2.0 Max.		
DC input	1.8V (min.)	3.0V (typ.)	5.5V (max.)
LNA Gain	26dB	30dB	32dB
Noise Figure	2.5dB	2.1dB	2.9dB
Power Consumption	3.2mA	7.2mA	15.6mA

MECHANICAL	
Embedded Ceramic Patch Antenna Dimensions Housing Dimensions	35 x 35 x 6mm 53*50*17mm
Housing Material	ABS
Cable	3M RG174 (fully customizable)
Connector	SMA(M) (fully customizable)
Waterproof	IP67
Weight	90g
Magnetic Pull Force	Pull horizontal max pull force(kgf) : 0.52 Pull vertical max pull force(kgf) : 0.48

ENVIRONMENTAL	
Operation Temperature	-40°C ~ +85°C
Storage Temperature	-40°C ~ +90°C

3. Antenna Block Diagram

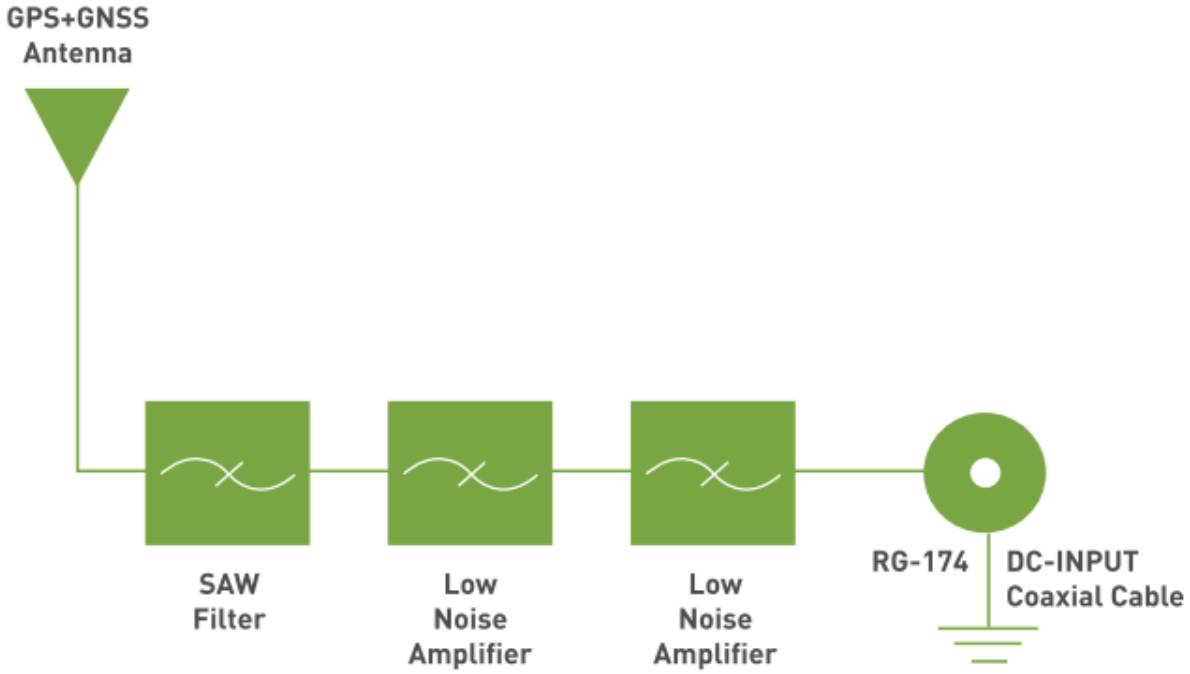

4. Antenna Characteristics

4.1 Return Loss

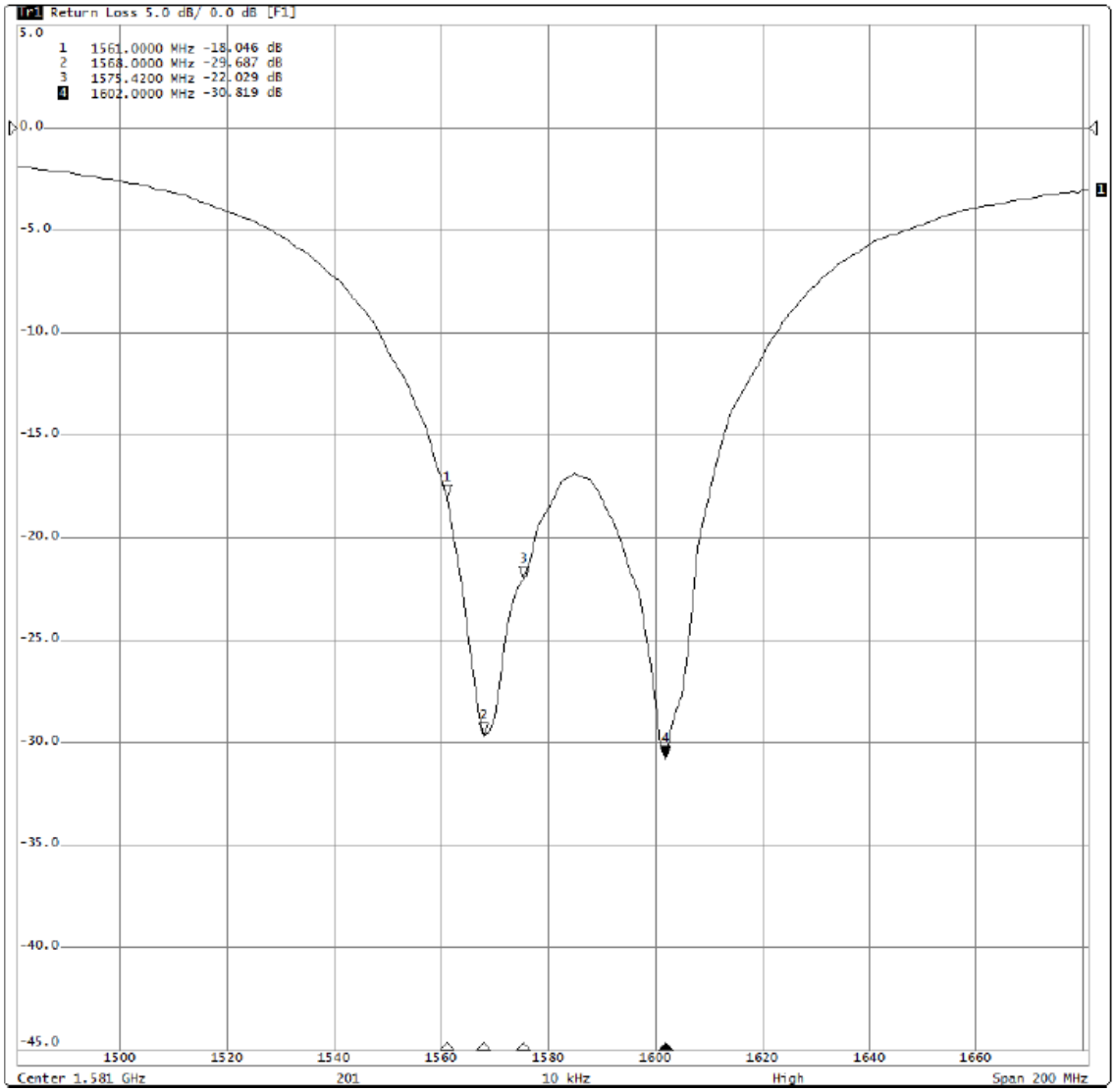

Frequency (MHz)	Return Loss
1561 MHz	-18.04
1575 MHz	-22.02
1602 MHz	-30.81

4.2 VSWR

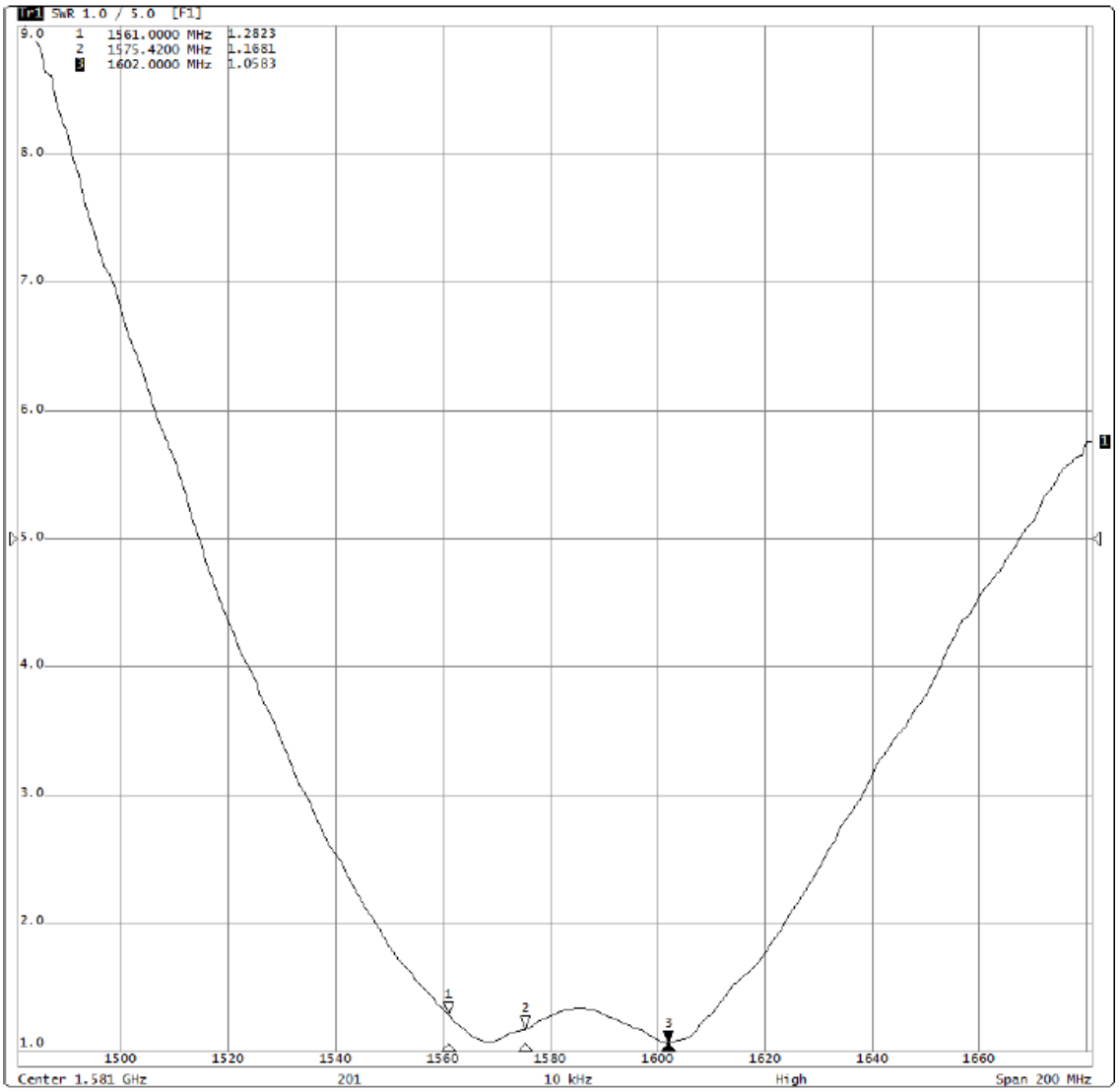

Frequency (MHz)	VSWR
1561 MHz	1.28
1575 MHz	1.16
1602 MHz	1.05

4.3 Impedance

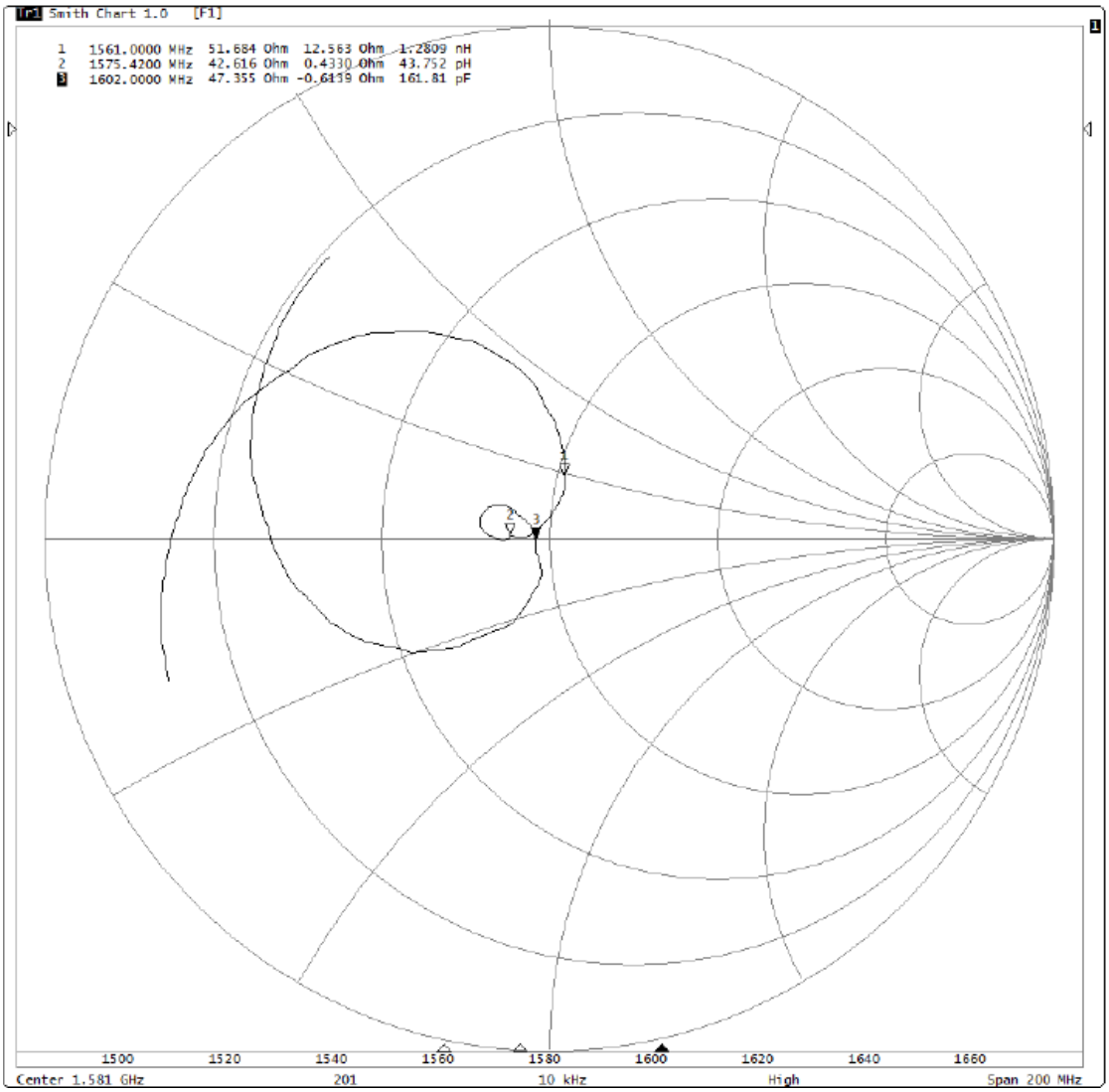

Frequency (MHz)	Impedance
1561 MHz	51.68 + j12.56
1575 MHz	42.61 + j0.43
1602 MHz	47.35 - j0.61

4.4 Radiation Pattern

XZ-Plane

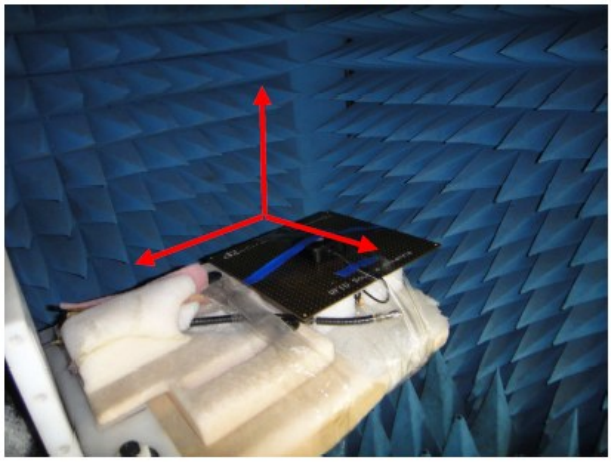

YZ-Plane

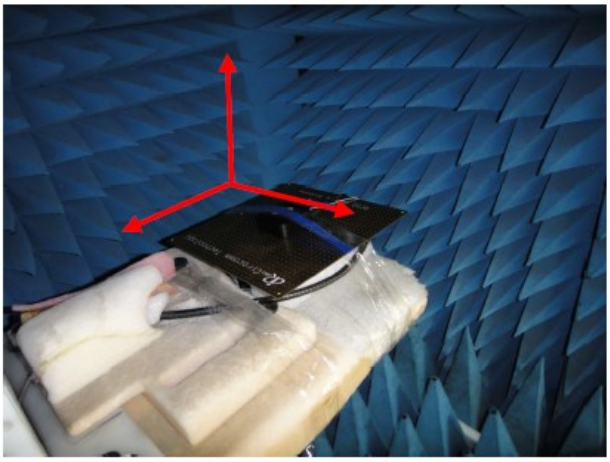

4.4.1 1561MHz

XZ-Plane

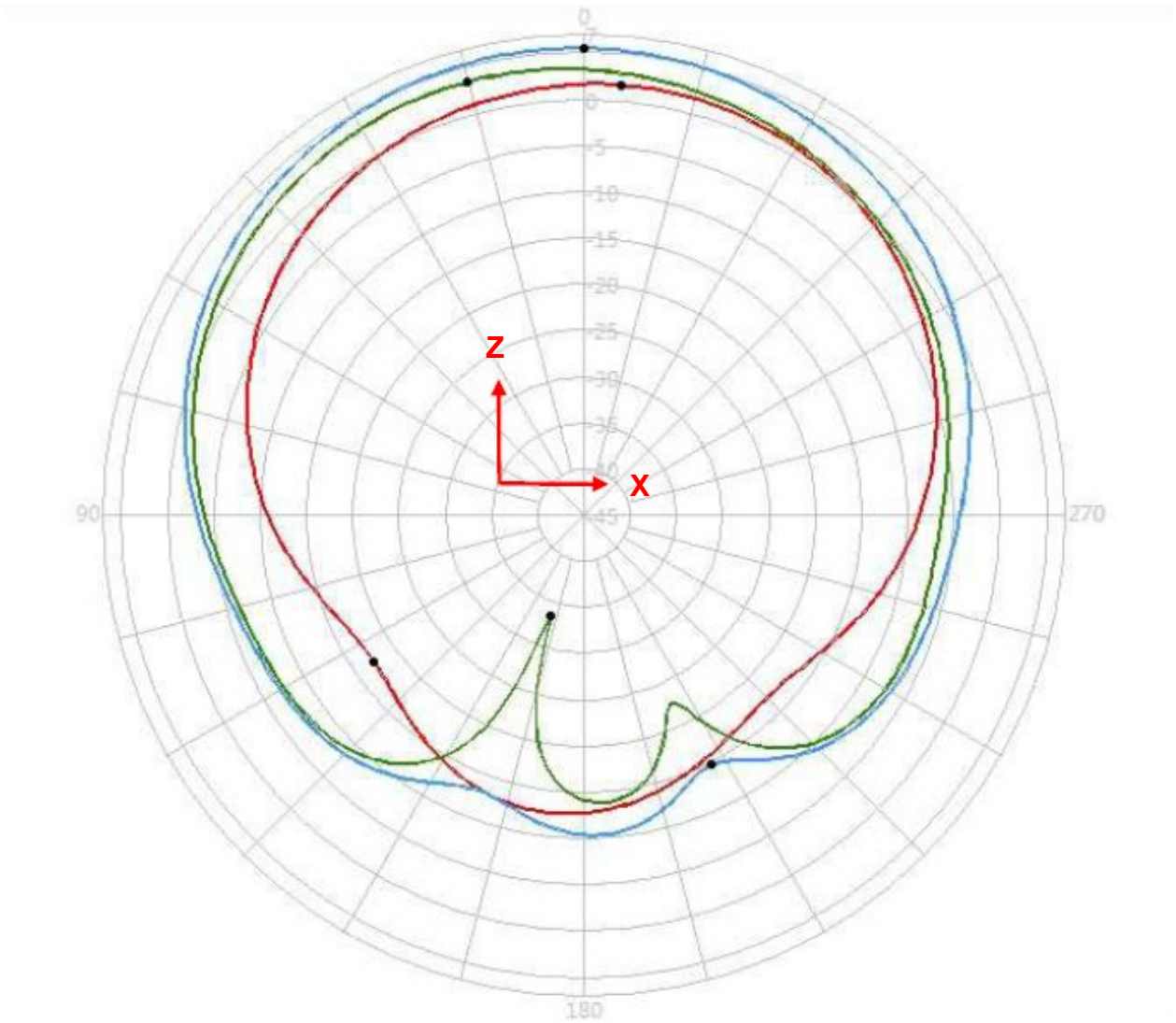

1561MHZ	Peak Gain	Zenith Gain
V+H	5.55 dBi	5.55 dBi

YZ-Plane

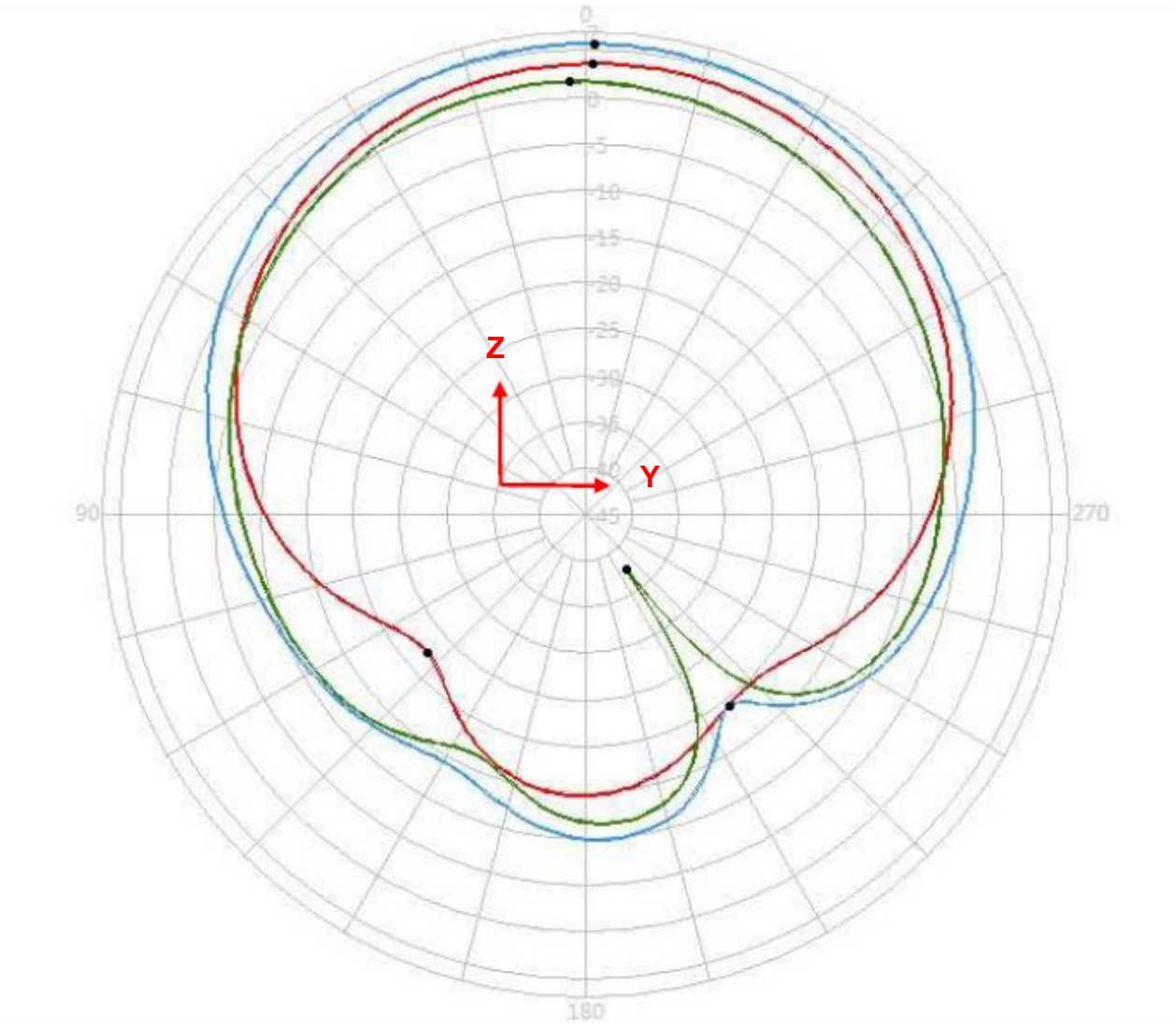

1561MHZ	Peak Gain	Zenith Gain
V+H	5.75 dBi	5.73 dBi

4.4.2 1575.42MHz

XZ-Plane

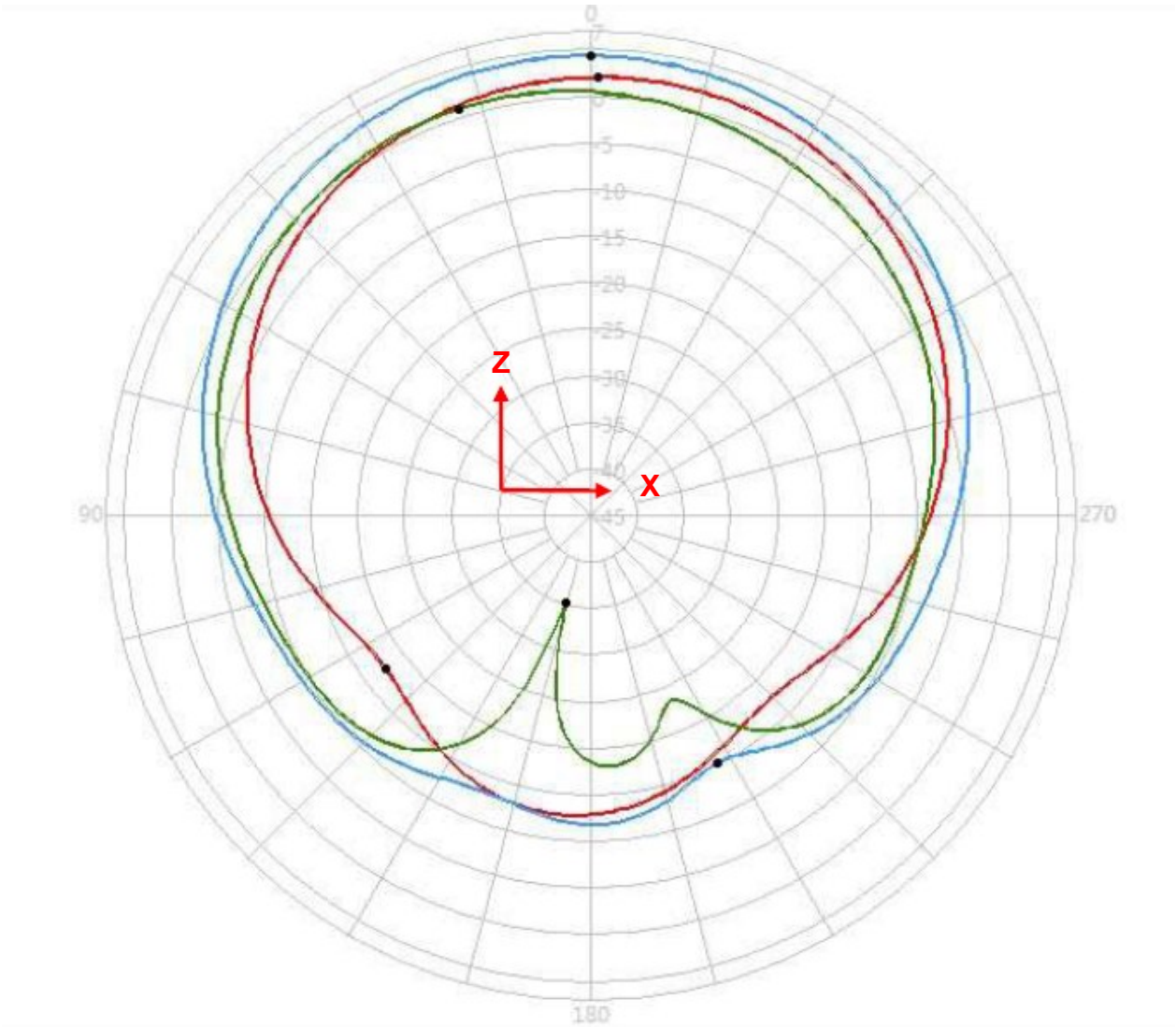

1575MHZ	Peak Gain	Zenith Gain
V+H	4.38 dBi	4.38 dBi

YZ-Plane

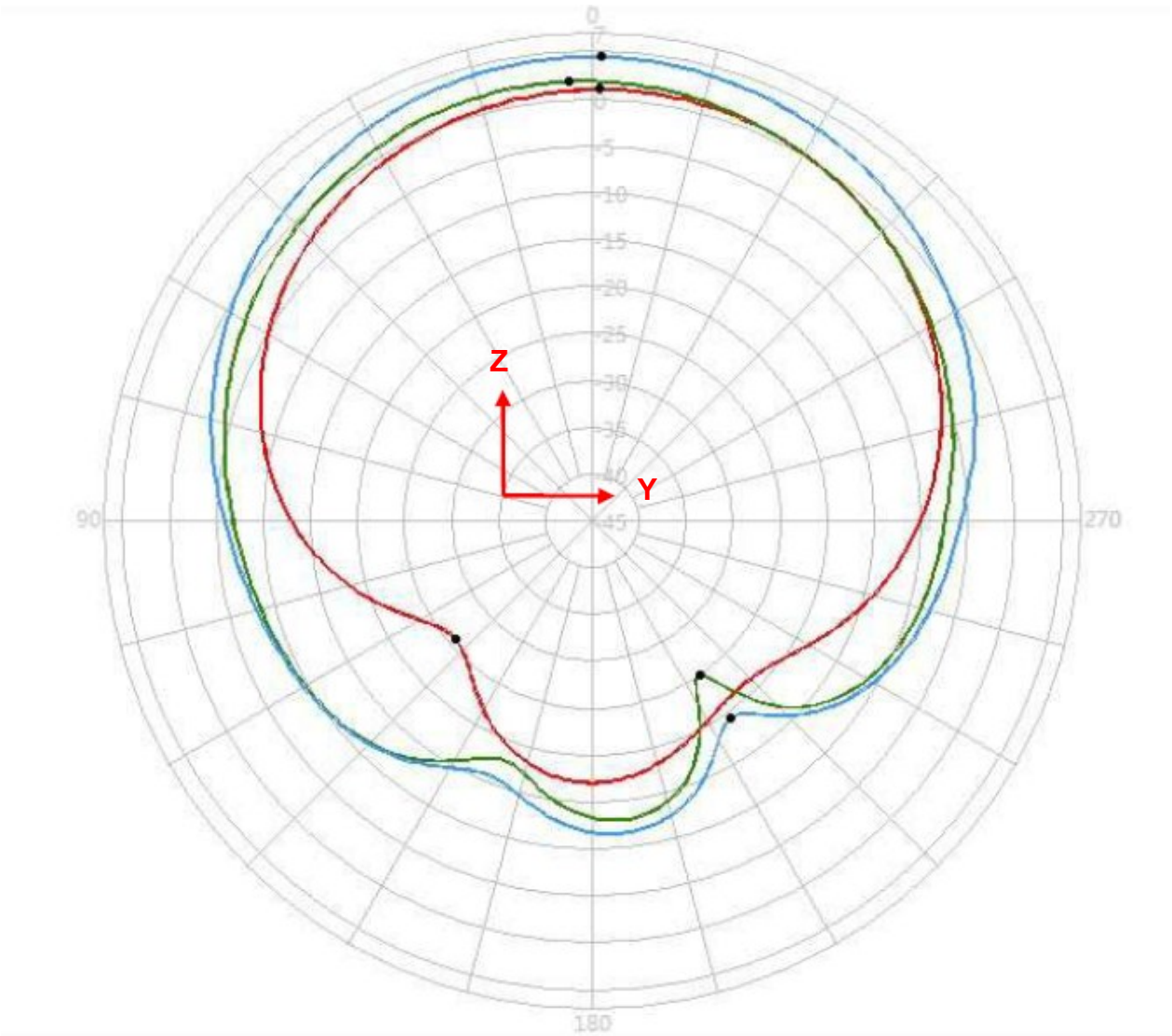

1575MHZ	Peak Gain	Zenith Gain
V+H	4.46 dBi	4.46 dBi

4.4.3 1602MHz

XZ-Plane

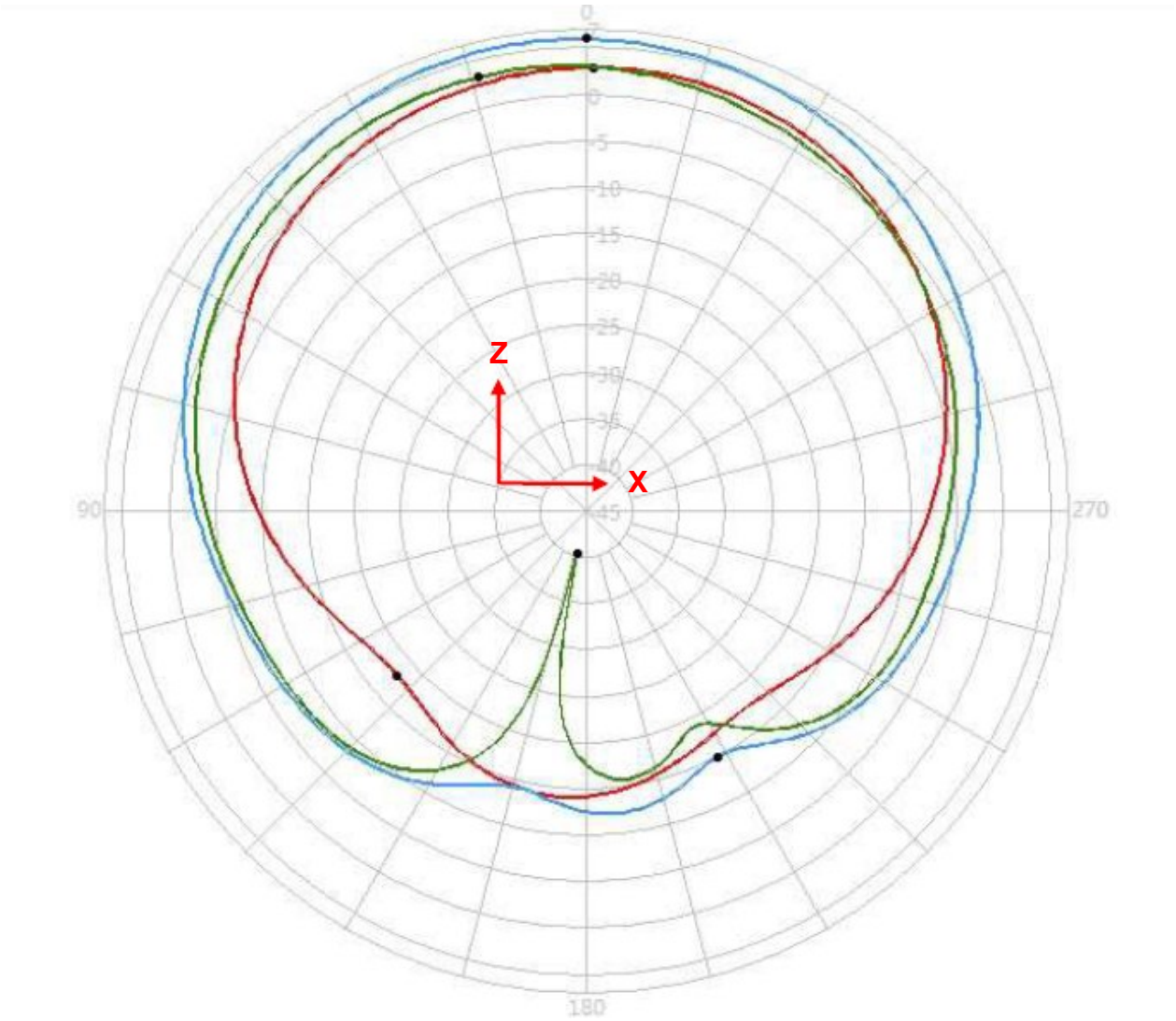

1602MHZ	Peak Gain	Zenith Gain
V+H	5.98 dBi	5.98 dBi

YZ-Plane

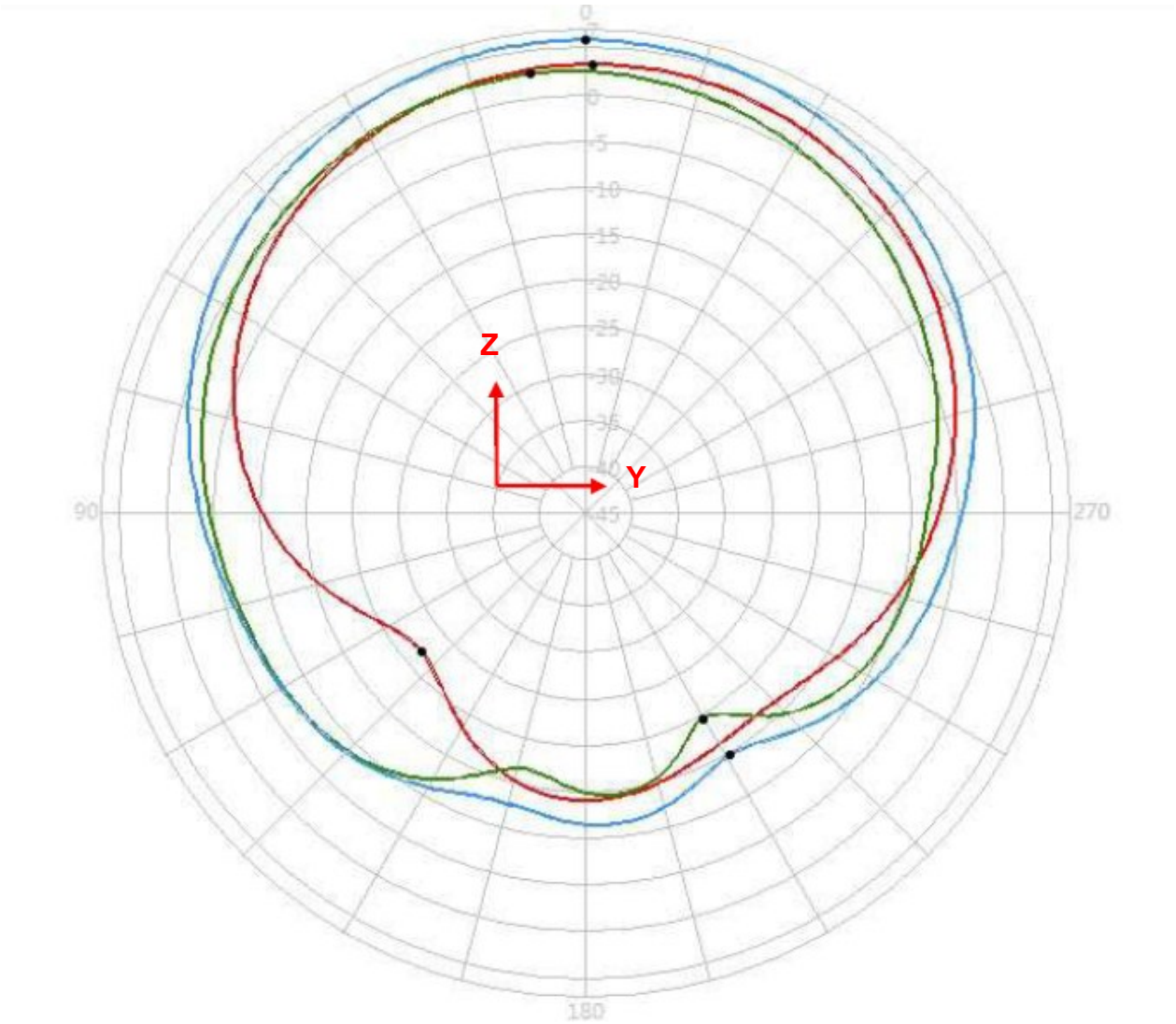

1602MHZ	Peak Gain	Zenith Gain
V+H	5.89 dBi	5.89 dBi

4.5 Axial Ratio Pattern (Spin Dipole Method)

4.5.1 1561MHz

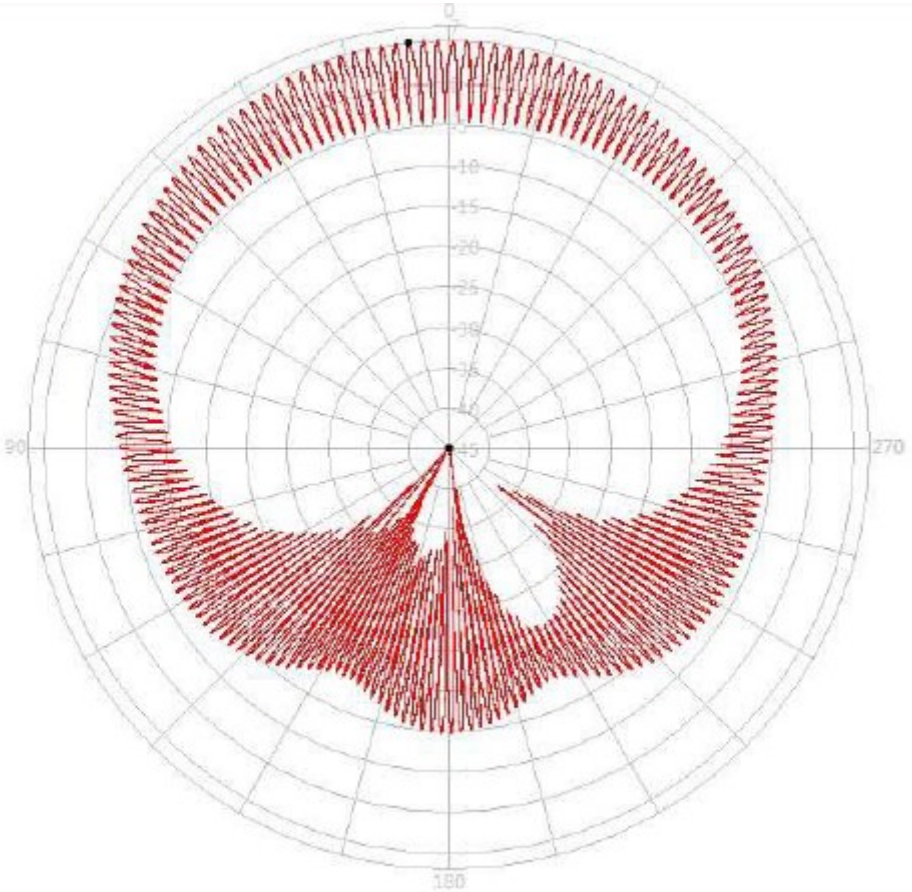

Angle	Axial Ratio
90°	6.81
75°	5.99
60°	6.36
45°	7.10
30°	8.32
15°	9.43
0°	**9.24**
345°	8.76
330°	7.06
315°	5.27
300°	4.43
285°	4.45
270°	6.24

4.5.2 1575.42MHz

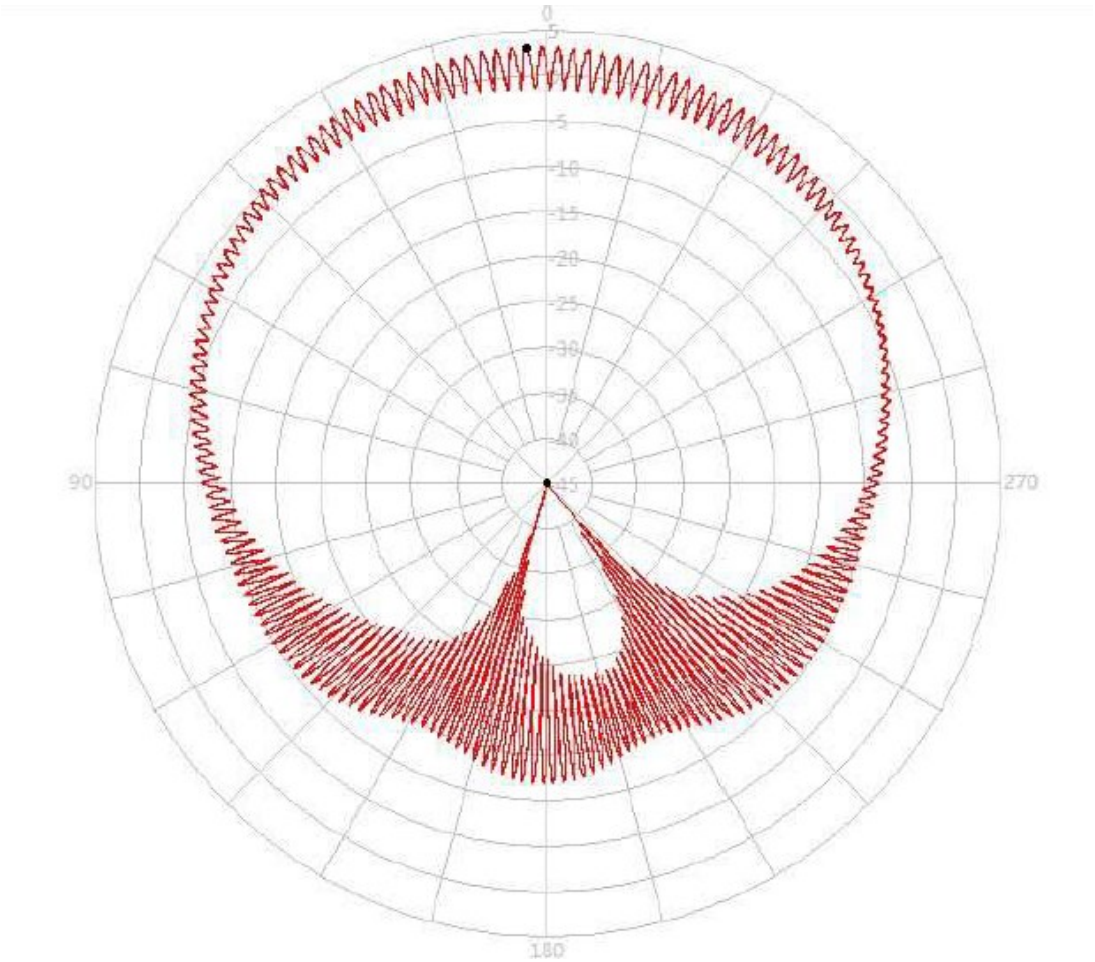

Angle	Axial Ratio
90°	2.39
75°	1.89
60°	1.35
45°	2.09
30°	3.02
15°	3.98
0°	**3.01**
345°	4.38
330°	3.47
315°	2.24
300°	0.86
285°	1.08
270°	1.60

4.5.3 1602MHz

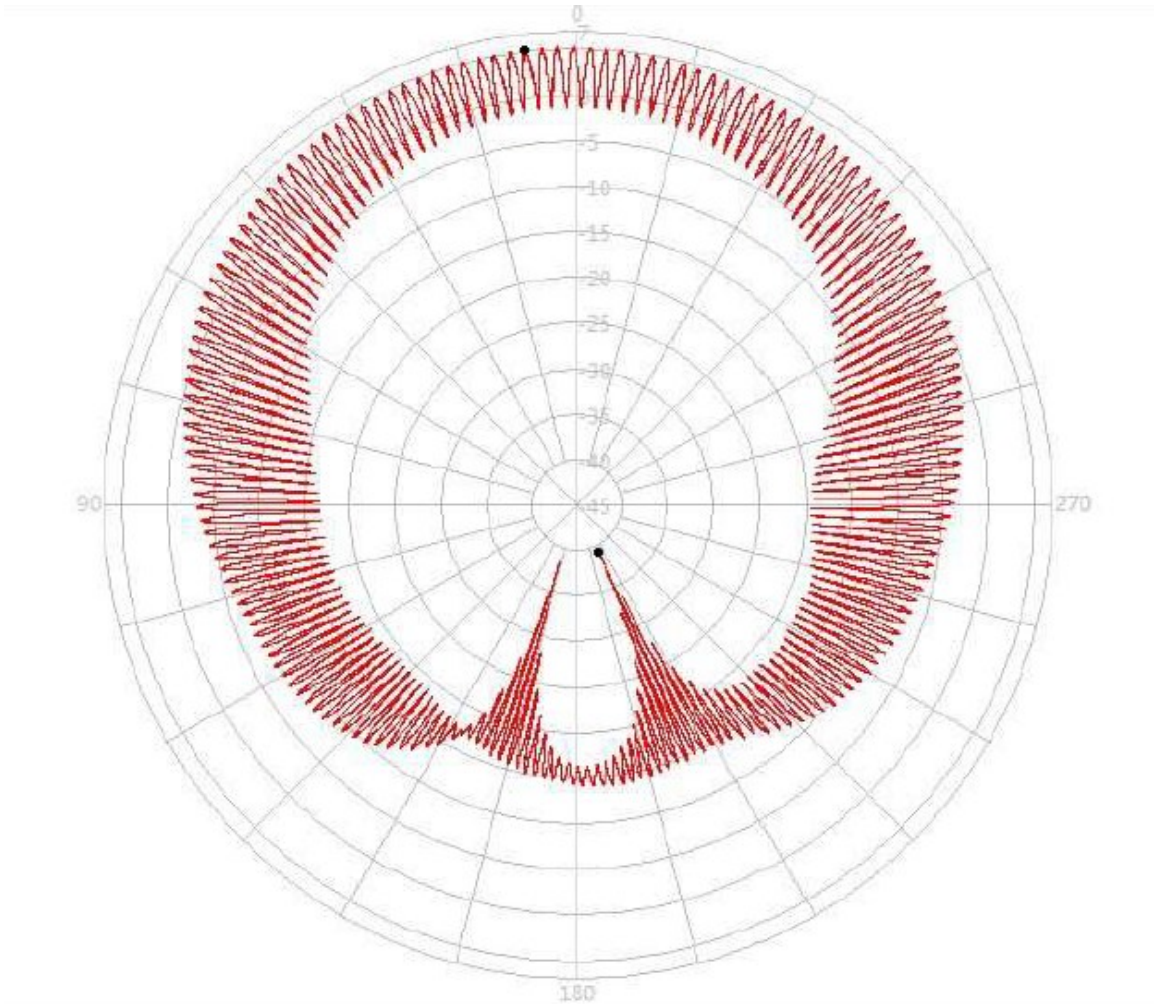

Angle	Axial Ratio
90°	13.33
75°	14.09
60°	13.20
45°	10.69
30°	8.50
15°	6.90
0°	**5.94**
345°	6.76
330°	8.21
315°	10.25
300°	13.66
285°	15.16
270°	15.45

5. GPS/GLONASS/Beidou LNA

5.1 LNA Gain and Output VSWR@3.0V

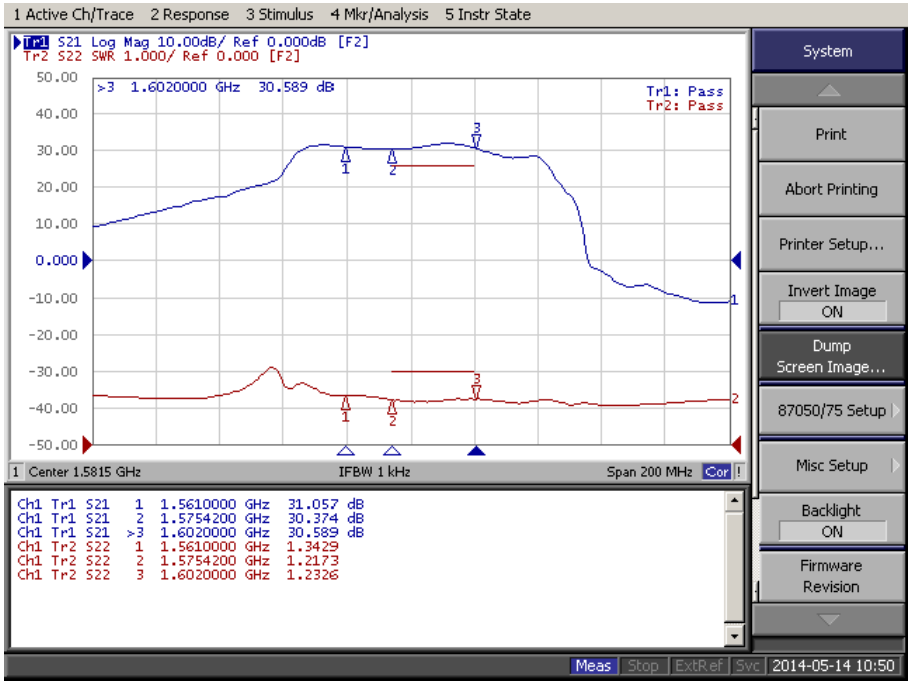

5.2 LNA Noise@3.0V

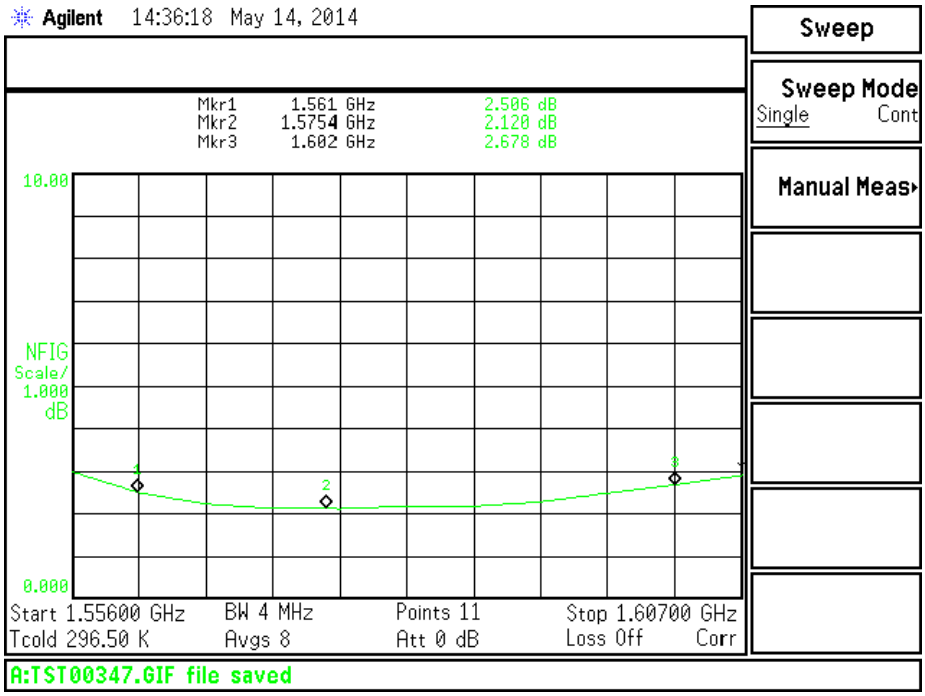

6. Magnetic Pull Force (kilogram – force (kgf)

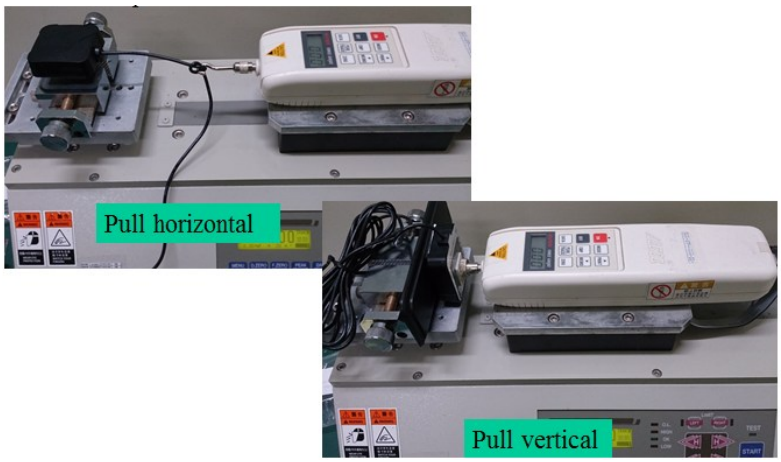

Horizontal Pull Force Breakdown Limit: 0.52kgf

Distance(mm)	0.5	1.0	2.0	3.0	4.0	5.0	6.0	7.0	8.0	9.0
Pulling force(Kgf)	0	0	0.18	0.31	0.3	0.3	0.3	0.3	0.3	0.3
Distance(mm)	10.0	11.0	12.0	13.0	14.0	15.0	**16.0**	16.3	17.0	18.0
Pulling force(Kgf)	0.3	0.27	0.24	0.29	0.3	0.44	**0.52**	0.54	0.42	0.37

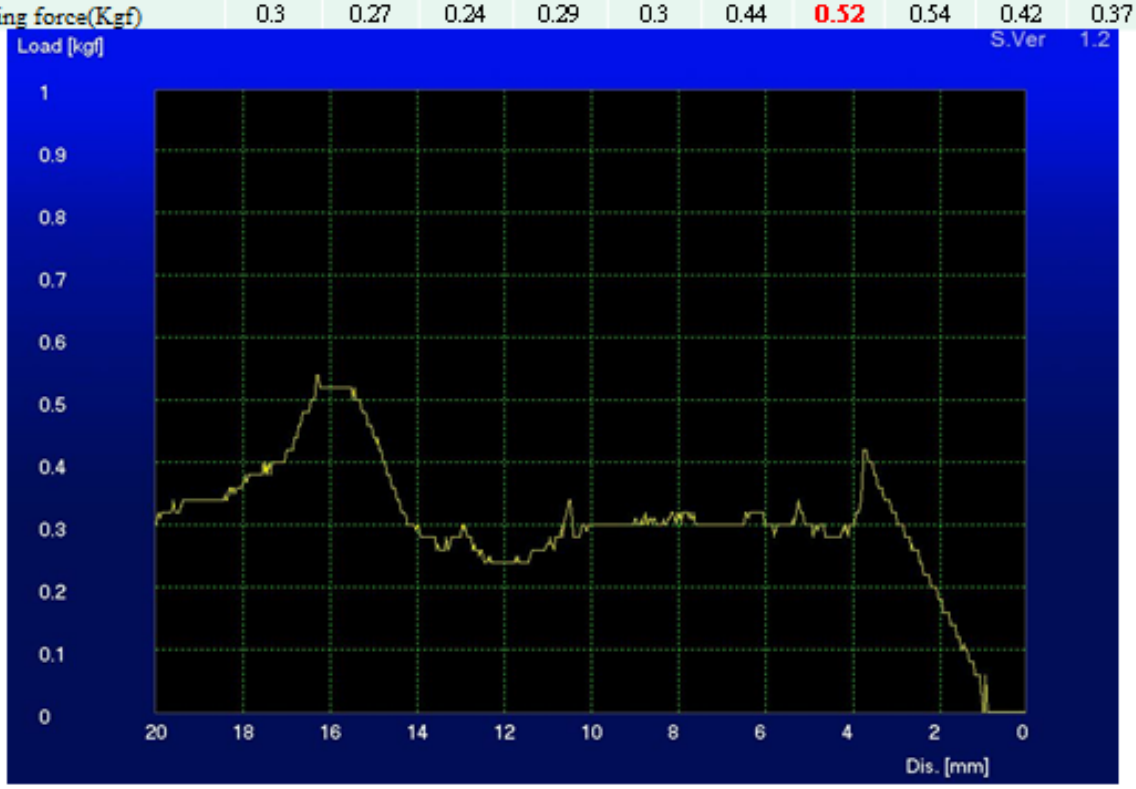

Vertical Pull Force Breakdown Limit: 1.23 kgf

Distance(mm)	0.5	1.0	**1.5**	2.0	2.5	3.0	3.5	4.0	4.5	5.0
Pulling force (Kgf)	0.96	1.07	**1.23**	0.84	0.55	0.42	0.38	0.35	0.34	0.32

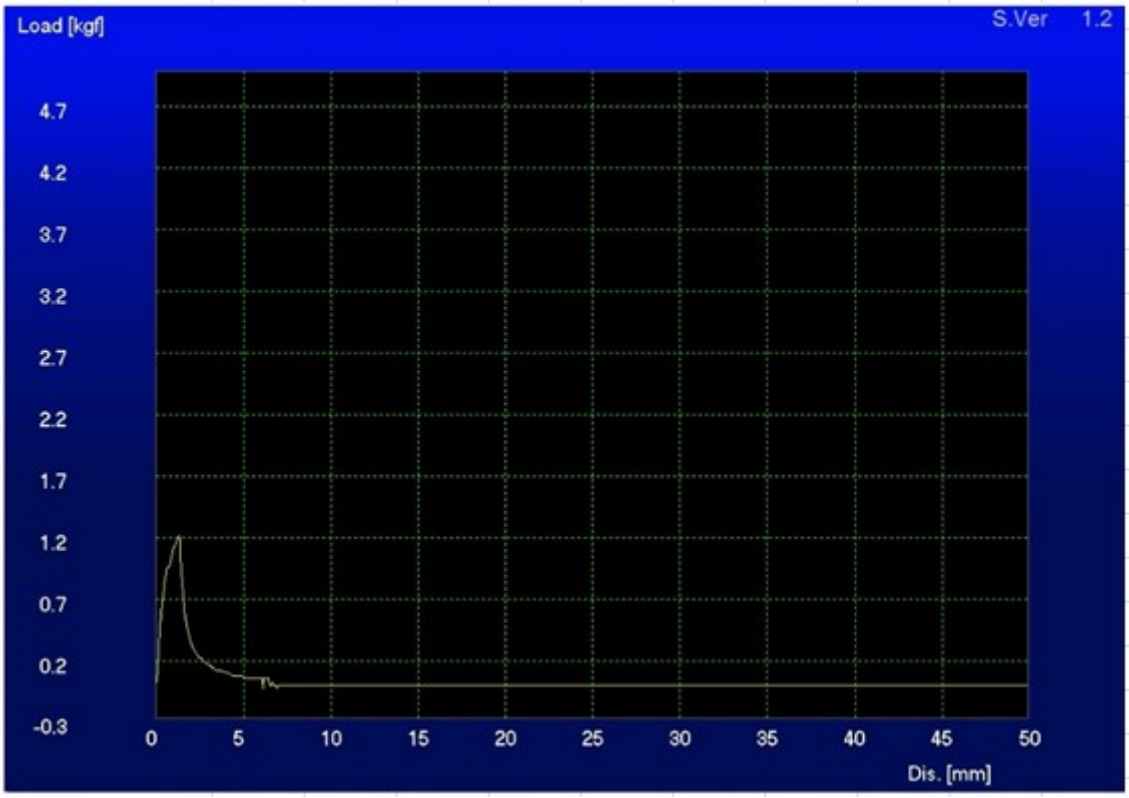

7. Mechanical Drawing

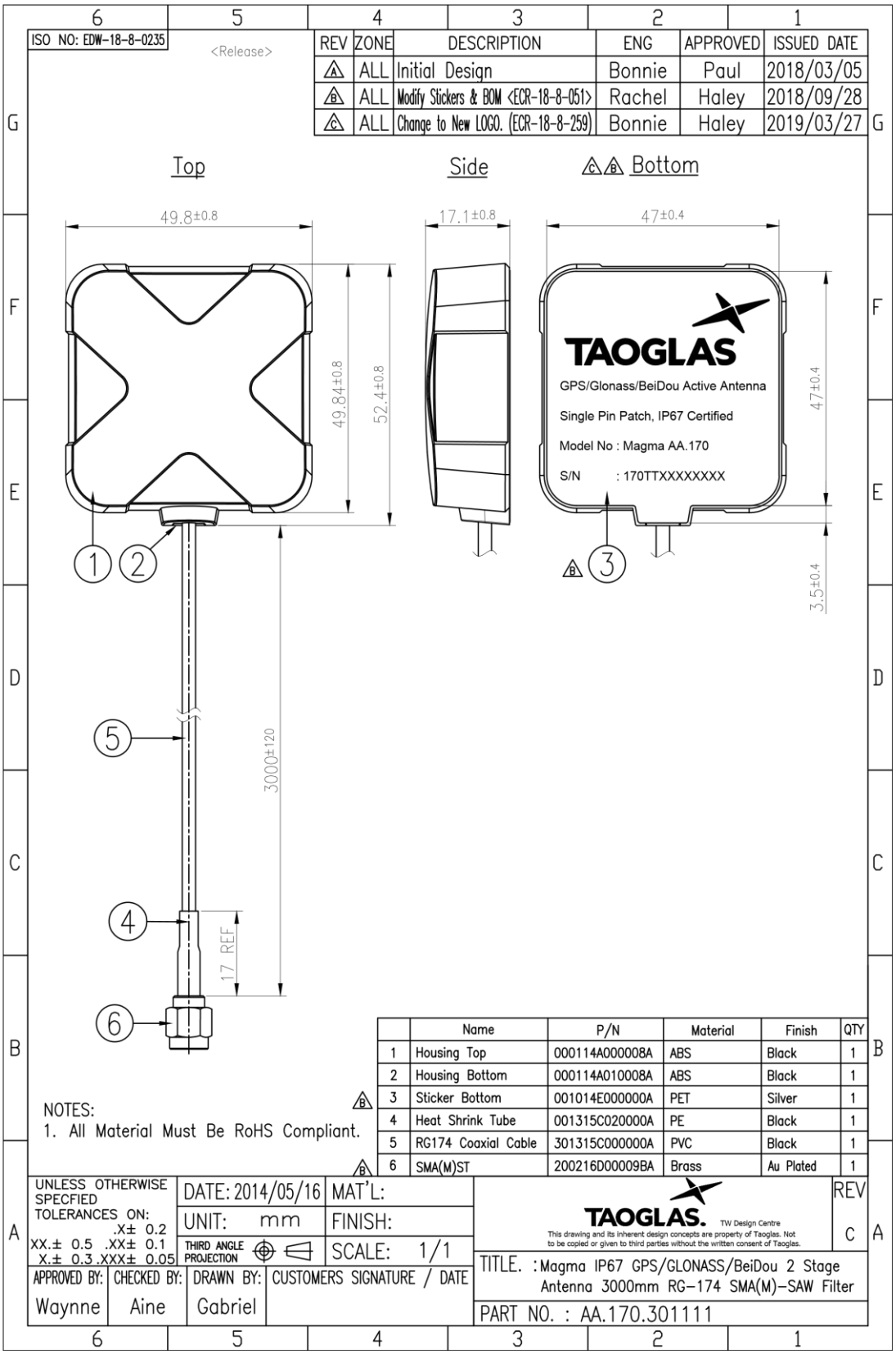

8. Packaging

1 pc AA.170.301111 in PE Bag
Dimensions - 230*100mm
Weight - 101Kg

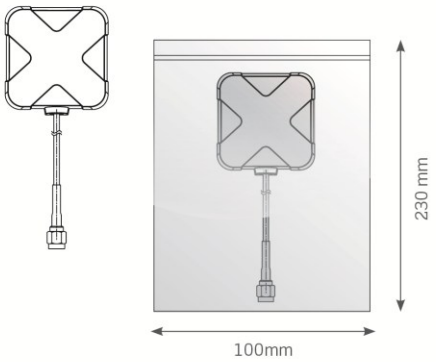

10pc AA.170.301111 in large PE Bag
Dimensions - 450*200mm
Weight - 1Kg

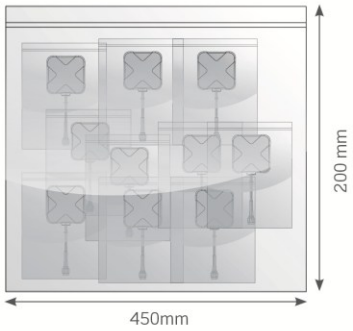

100 pcs
10 Large PE Bags in one carton
Carton Dimensions - 370*370*300mm
Weight - 10.5Kg

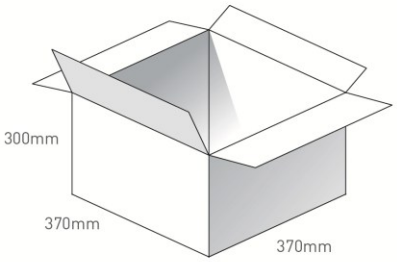

Pallet Dimensions 1200*1000*1400mm
24 Cartons per Pallet
6 Cartons per layer
4 Layers

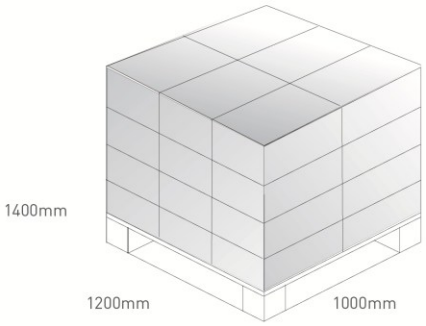

Taoglas makes no warranties based on the accuracy or completeness of the contents of this document and reserves the right to make changes to specifications and product descriptions at any time without notice. Taoglas reserves all rights to this document and the information contained herein.

Reproduction, use or disclosure to third parties without express permission is strictly prohibited.

© Taoglas