A-848 Series, Rated up to 300 Amps, 24/48 Vdc

Product Facts

- **SPST NO, DPST NC, Double break**
- **Gasket sealed**
- **Meets many requirements of MIL-PRF-6106**
- **Designed for series/parallel starting systems**

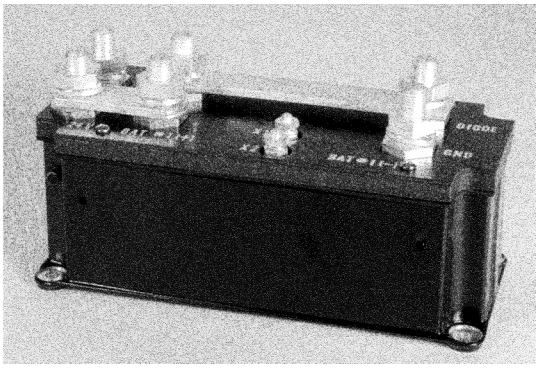

Performance Data

Electrical Characteristics

Contact Arrangement — SPST NO, DPST NC, Double Break

Rated Operating Voltage — 24/48 Vdc

Resistive Rating — 300 Amps

Inrush for 30 sec — 1,100 Amps

Inrush — 700 Amps

General Characteristics

Temperature Range — -55°C to +71°C

Operating Cycles (Life) at Rated Resistive Load, Min. — 50,000 cycles

Operating Cycles (Life) Mechanical, Min. — 100,000 cycles

Dielectric Strength —
All Circuits to Ground — 1,250 Vrms
Circuit to Circuit — 1,250 Vrms
Coil to Ground and Aux. Contacts — 1,000 Vrms

Weight — 3.5 lbs

Coil Characteristics

Duty Cycle — Intermittent

Operating Voltage, Max. — 31 Vdc

Operating Voltage, Min. — 18 Vdc

Pickup Voltage @ 25°C, Max., Initial — 12 Vdc

Dropout Voltage — 1.5 to 7 Vdc

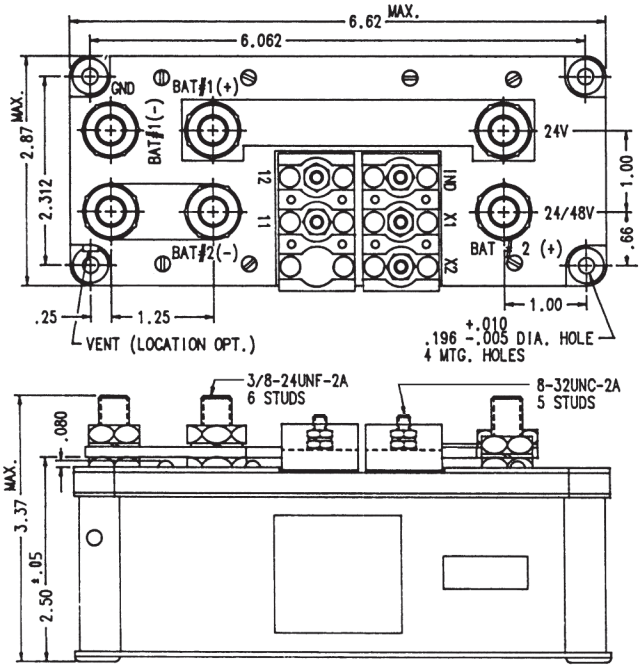

Mounting Style A

Circuit Configurations (Consult factory for other available circuit configurations)

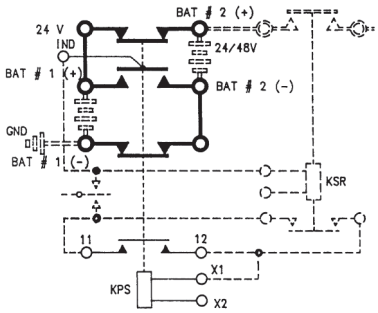

Circuit Configuration 1

HARTMAN Part Number	Construction Type	Mounting Style	Coil Type	Circuit Config.	TE Part Number
A-848KH	Gasket/Vented	A	Intermittent	1	1616082-2
A-848KH-2	Gasket/Vented	A	Intermittent	1	1616082-4

For factory-direct application assistance, phone 419-521-9500 or fax 419-526-2749.

Catalog 5-1773450-5
Revised 3-13

www.te.com

Dimensions are shown for reference purposes only. Specifications subject to change.

Dimensions are in millimeters unless otherwise specified.

USA: +1 800 522 6752
Asia Pacific: +86 0 400 820 6015
UK: +44 800 267 666

For additional support numbers please visit www.te.com

A-848 Series, Rated up to 300 Amps, 28 Vdc

Product Facts

- **DPST NO, Double break and DPDT Double break**
- **Gasket sealed**
- **Auxiliary contacts available**
- **Meets many requirements of MIL-PRF-6106**

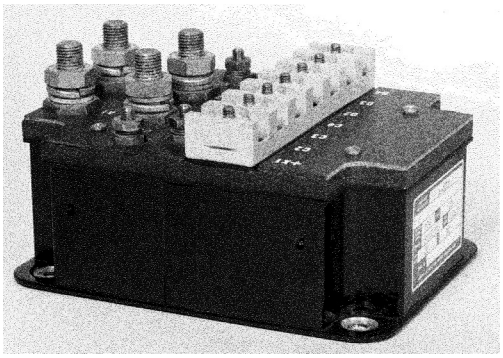

Performance Data

Electrical Characteristics

Contact Arrangement —
A-848MAS/MLS: DPST NO, Double Break
A-848KLC: DPDT Double Break

Rated Operating Voltage — 28 Vdc

Resistive Rating — 300 Amps, A-848KLC – 200 Amps

General Characteristics

Temperature Range — -55°C to +71°C

Operating Cycles (Life) at Rated Resistive Load, Min. — 50,000 cycles

Operating Cycles (Life) Mechanical, Min. — 100,000 cycles

Dielectric Strength —
All Circuits to Ground — 1,250 Vrms
Circuit to Circuit — 1,250 Vrms
Coil to Ground and Aux. Contacts — 1,000 Vrms

Weight — 3.00 lbs

Coil Characteristics

Duty Cycle — Continuous

Operating Voltage, Nom. — 28 Vdc

Pickup Voltage, Max. — 18 Vdc

Dropout Voltage — 9 Vdc (12 Vdc Hot)

Coil Current, Inrush, Max. — 3.0 Amp

Coil Current, Holding, Max. — 0.35 Amp

Circuit Configurations (Consult factory for other available circuit configurations)

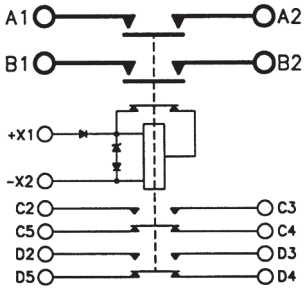

Circuit Configuration 1

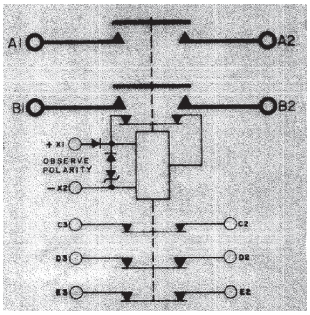

Circuit Configuration 2

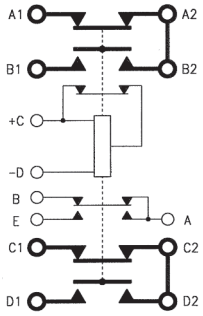

Circuit Configuration 3

HARTMAN Part Number	Construction Type	Mounting Style	Coil Type	Circuit Config.	TE Part Number
A-848MAS	Gasket/Vented	A	Continuous w/Supp., Economizing	1	1616102-2
A-848MLS	Gasket/Vented	B	Continuous w/Supp., Economizing	2	1616102-3
A-848KLC	Gasket/Vented	C	Continuous, Economizing	3	1616082-6

For factory-direct application assistance, phone 419-521-9500 or fax 419-526-2749.

Catalog 5-1773450-5
Revised 3-13

www.te.com

Dimensions are shown for reference purposes only. Specifications subject to change.

Dimensions are in millimeters unless otherwise specified.

USA: +1 800 522 6752
Asia Pacific: +86 0 400 820 6015
UK: +44 800 267 666

For additional support numbers please visit www.te.com

A-848 Series, Rated up to 300 Amps, 28 Vdc (Continued)

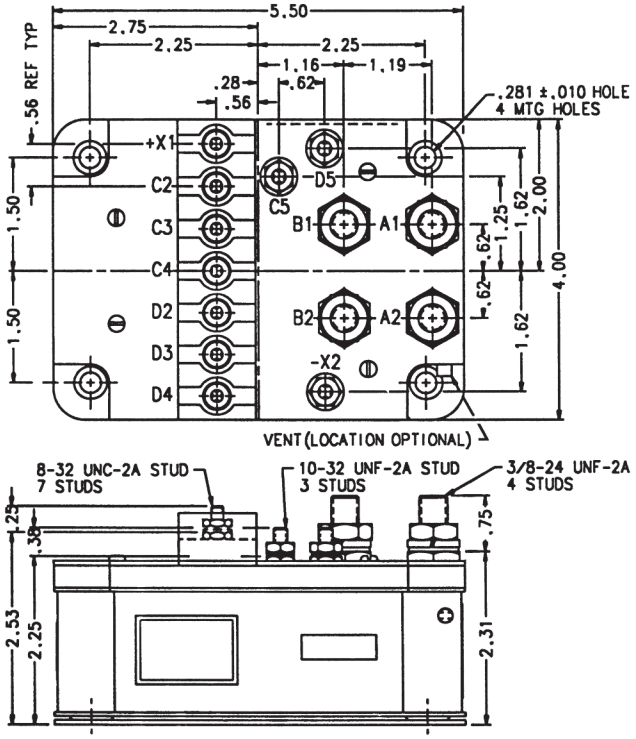

Mounting Style A

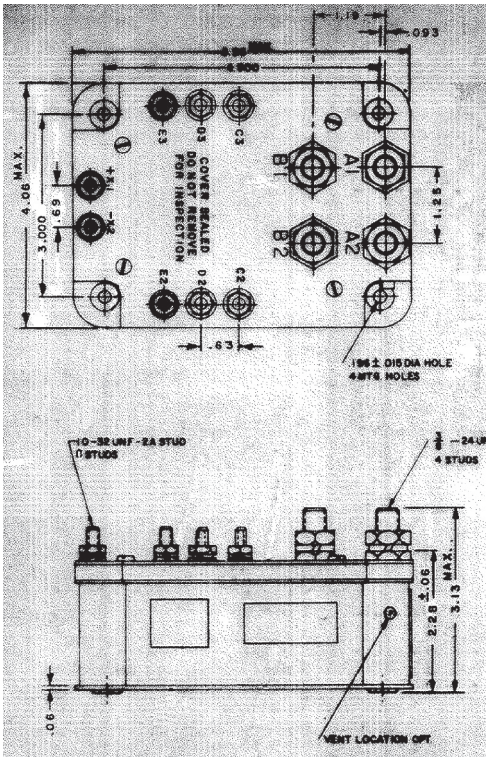

Mounting Style B

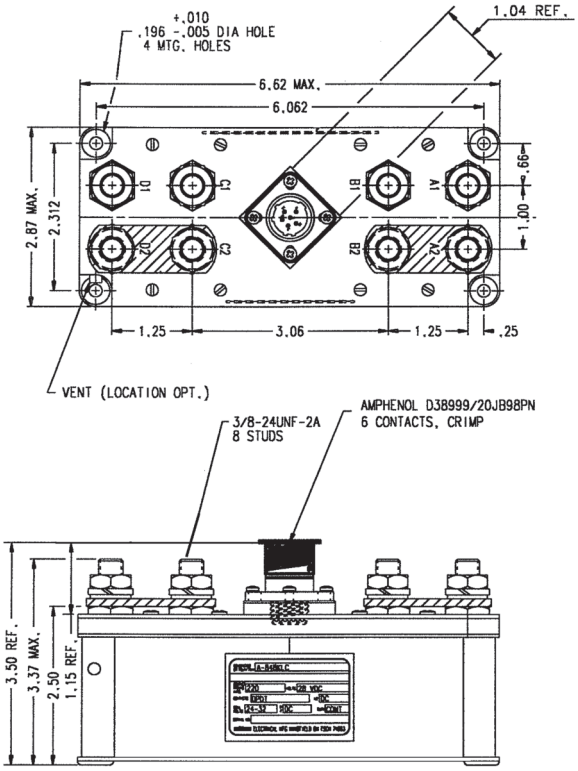

Mounting Style C

For factory-direct application assistance, phone 419-521-9500 or fax 419-526-2749.