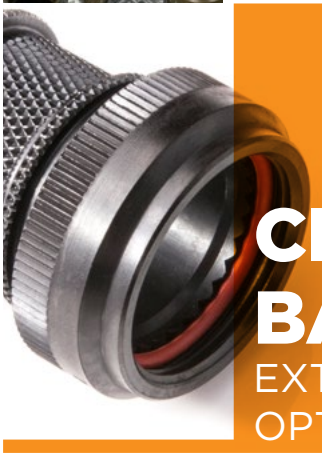

CIRCULAR BACKSHELLS

EXTENSIVE RANGE OF TERMINATION OPTIONS FOR CIRCULAR CONNECTORS

High performance sealing and strain relief backshell solutions

Contents

Introduction.... 3
Selecting a Backshell.... 4
Termination Styles.... 5
Material & Plating Codes.... 6
Modification Codes.... 7
Connector Interface Table.... 9
POLAMCO Backshell Part Numbering System.... 10
Calculating Wire Bundle Diameter.... 11
Product Finder.... 12

BAND
BT Series.... 14
88 Series.... 16
AP Series.... 18
DS Series.... 20

SPRING
91 Series.... 22

BRAID TAIL
70 Series.... 24

BRAID TRAP
95 Series.... 26

CONE
64 Series.... 28
308 Series.... 30

STRAIN RELIEF
77 Series.... 32

MESH TAPE
KMA Series.... 34
KMCC Series.... 36

HEAT SHRINK BOOT
76 Series.... 38

THREAD EXTENDERS & ADAPTERS
PG Series.... 40
DC Series.... 42

TINEL RING
TXR Series.... 44

HEXASHIELD
HexaShield Series.... 46

COBRAHEAD
Backshell modification.... 48

BAND STRAPS
Backshell accessory.... 50

Glossary of Terms.... 53

CIRCULAR BACKSHELLS

Termination Options For Circular Connectors

MULTIPLE CONFIGURATIONS

- Low profile options
- Compatible with many shell sizes and plating finishes
- Wide variety of modification options allow customisation of standard ranges to suit specific requirements

EASY INSTALLATION

- Tool free ranges available
- Simple and fast termination solutions
- Two-part components allow uncoupling for repairs to help eliminate damage to the boot

HIGH-RELIABILITY SOLUTIONS

- Backshells can provide strain-relief and cable support to help prevent bending or overflexing
- Offer individual or overall 360° screening against EMI/RFI interference
- Backshells can offer protection towards the effectiveness of the cable, sealing against water and dirt ingress

For high-performance sealing and strain relief, the ideal mate for a TE Connectivity (TE) connector or molded part in a wiring application, is a TE backshell.

TE supplies a comprehensive range of circular POLAMCO and Raychem backshells that can assist in providing effective strain relief, environmental sealing and electromagnetic interference (EMI)/radio frequency interference (RFI) shielding, helping you meet today's challenges in demanding environments, across many market sectors.

Spin-Coupling Adapters

Spin-coupling adapters are two-part components that have a rotatable coupling nut and a grooved body designed to accommodate lipped-type heat-shrinkable boots.

Spin-couplings with a compatible molded part are used to optimize environmental protection and strain relief of unscreened cable terminations. Cable repairs can often be made without removing the boot.

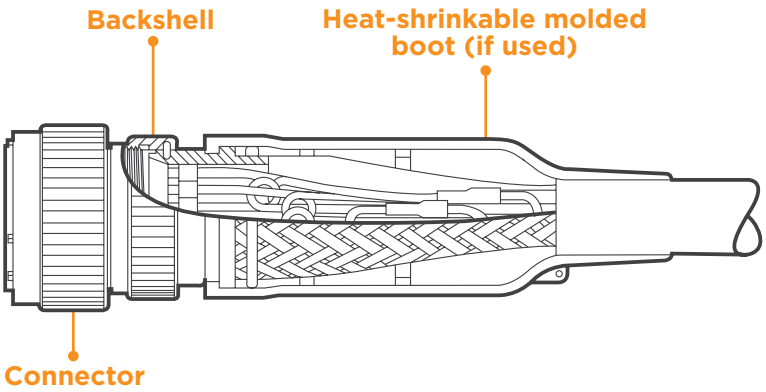

Rollback Repair Possible With A Backshell

Many cable repairs are made within 75 mm of the connectors—usually because of a broken pin or wire. By reheating the heat-shrinkable boot and unscrewing the backshell coupling nut, the boot can be "rolled back," providing access to the rear of the connector for repair. This technique is applicable to spin-coupling backshells utilizing a heatshrink boot.

TE Components . . . TE Technology . . . TE Know-how . . .

AMP | AGASTAT | CII | HARTMAN | KILOVAC | MICRODOT | NANONICS | POLAMCO | Raychem | Rochester | DEUTSCH
SEACON Phoenix | LL ROWE | Phoenix Optix | AFP | SEACON

Empower Engineers to Solve Problems, Moving the World Forward.

Selecting A Backshell

TE offers an extensive standard range of backshell styles to suit a wide variety of applications and requirements. These ranges can be extensively customized using an array of plating options, materials and modification codes. Use the product finder on pages 12-13 to select the most suitable standard series for your requirement.

Adapter Code

An alphabetical code is used to identify connectors with similar adapter interfaces. This code is used to determine the backshell family and part number. The table connector interface table on page 9 shows the appropriate code to match a variety of interfaces.

Backshell Part Number

The part number is the sequence of numbers and letters that describes the adapter family (or series), size, angle, material, finish, and modifications. The part numbering system is explained on page 10 for POLAMCO series backshells and on the individual Raychem product pages.

Family/Series

TE offers several families (or series) of backshell products. Each part number begins with an numerical or alphanumeric prefix denoting the specific product family.

Entry Size

Entry size is the diameter of the hole through which the cable enters into the adapter. If unknown, the diameter required can be calculated using the formula shown on page 11.

Shell Size

This is the size of a connector as specified by the connector manufacturer. It is normally a two-digit number between 08 and 24, although certain

connectors are obtainable in either larger or smaller sizes and some use letter codes.

Modifications

Other options (such as extended length, part marking etc) are available and are defined by standard modification codes - listed on pages 7-8. Alongside the standard ranges shown in this brochure, TE also offer custom solutions to fit more exact requirements. Contact the sales office to find out more.

Please refer to the fold out interface page (attached to the reverse cover of this brochure) for interface specific measurements.

Termination Styles

There are a variety of methods for terminating screening braid to backshells, many of which are covered within TE's standard range of backshells shown below.

Tinel Ring

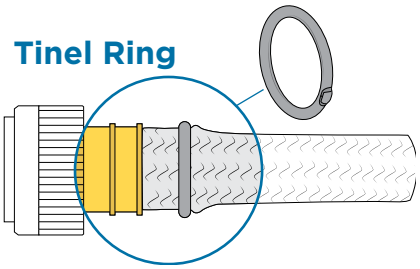

Memory ring shrunk by the application of heat
Used on: TXR

Cone

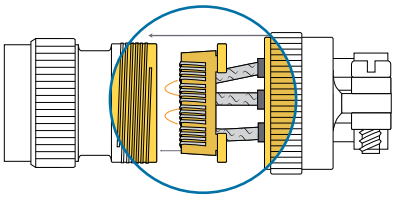

Braid/Pigtails clamped between cones
Used on: 64/308/HexaShield Series

Band

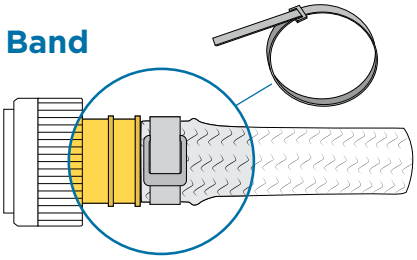

Band clamped with calibrated tool
Used on: BT/88/AP/DS Series

Mesh Tape

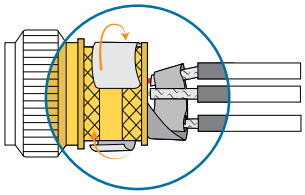

Wraps mesh tape wraps around individual screens to eliminate EMC windows
Used on: KMA Series

Braid Tail

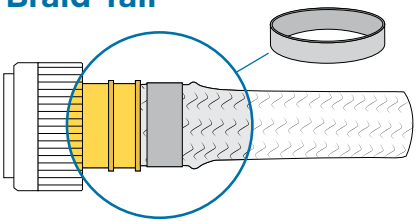

Product supplied with pre-terminated braid tail
Used on: 70 Series

Pre-Fabricated

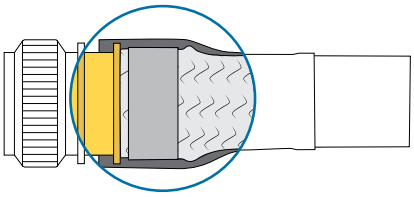

Backshell with pre-installed braid tail and heatshrink boot. Installed on cable with heat gun.
Used on: KTKK/TAK

Spring

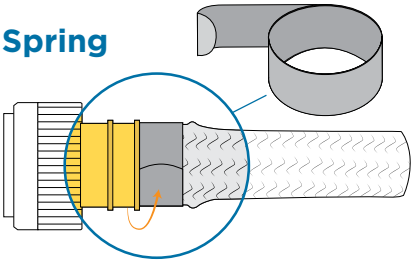

Spring wrapped around braid (without tooling)
Used on: 91 Series

Braid Trap

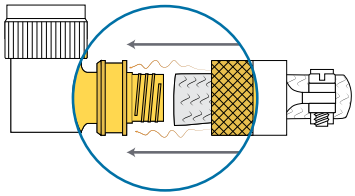

Braid trapped in loose fitting thread
Used on: 95/77 Series

Material & Plating Codes

Material Description		
POLAMCO	Raychem	
1	A	ALUMINIUM ALLOY 6000 SERIES
2	B	NICKEL ALUMINIUM BRONZE DGS 1043 / NES 833 (MARINE APPLICATIONS)
4	S/K*	STAINLESS STEEL 303 S31 / 304
46	-	STAINLESS STEEL 316 (MARINE APPLICATIONS)
6	S*	STAINLESS STEEL NUT / ALUMINIUM BODY
74	-	PEI (30% GLASS FILLED HIGH TEMPERATURE COMPOSITE) - CURRENTLY AVAILABLE IN STRAIGHT BTH1 & BTF1 RANGES

* HexaShield backshells only. Code B not available for HexaShield backshells

Plating Description					
POLAMCO	Raychem		ROHS Compliant	Conductivity	Environmental Protection
B	B	CADMIUM, OLIVE DRAB OVER ELECTROLESS NICKEL	NO	CONDUCTIVE	500 HRS
C	C	ELECTROLESS NICKEL	YES	CONDUCTIVE	48 HRS
D	G	BLACK ANODISE	YES	NON CONDUCTIVE	500 HRS
J	J	PASSIVATE (STAINLESS STEEL ONLY)	YES	-	-
U	/	UNPLATED CLEAN FINISH NOT SHOT BLASTED	YES	-	-
Z	W	SHOT BLAST FOR NON-REFLECTIVE FINISH (NICKEL ALUMINIUM BRONZE ONLY)	YES	CONDUCTIVE	-
ZB	U	ZINC COBALT OVER ELECTROLESS NICKEL WITH AN OLIVE DRAB CHROMATE CONVERSION	YES	CONDUCTIVE	350 HRS
ZK	-	ZINC COBALT OVER ELECTROLESS NICKEL WITH A BLACK CHROMATE CONVERSION	YES	CONDUCTIVE	350 HRS
ZN	Z	ZINC NICKEL BLACK PASSIVATE OVER ELECTROLESS NICKEL	YES	CONDUCTIVE	500 HRS

These lists are not exhaustive - contact TE for further information

Modification Codes

TE's standard range of backshells can be extensively modified using the codes listed below. Many of these options can be used in combination to create a solution to suit most needs. Consult TE for assistance regarding the use of modification codes.

Suffix		Meaning	Applies to Series	Affects
POLAMCO	Raychem			
TE	F	Internal blue polytetrafluoroethylene (PTFE) coating	All	Finish
TEG	-	Internal green PTFE coating	All (TE & TEG are mutually exclusive)	Finish
TAH	-	Internal PTFE coating, anti-decoupling, hex nut (wire retained)	Replaces codes TE, AD & HEX	Finish
BN	-	Nickel aluminium bronze nut, shot blast finish	Aluminium backshells	Material / finish
ESC	-	ESC style interface	A-interface only	Interface
NGP	-	No grommet profile	Consult engineering for availability	Interface
AD	S	Anti-decoupling	All non-direct coupling	Interface
TD	-	Torque-differential anti-decoupling	All non-direct coupling (AD & TD are mutually exclusive)	Interface
G	P	Coupling nut with grub screw	L and LV interface	Interface
FB	-	Wide body	All – consult engineering for dimensions	Body shape
SE	-	Swept elbow (cast centre section)	All 90° except 96 series *	Body shape
AP	-	Spanner holes in coupling nut	All except AP series, where spanner holes are standard	Nut
FN	-	Coupling nut with flats	All	Nut
HEX	-	Coupling nut hex	All (FN & HEX are mutually exclusive)	Nut
WN	-	Wire-retained nut (hex shape)	All non-direct coupling (WN & HEX are mutually excl.)	Nut
TH	-	Tooth inspection holes in coupling nut	All interfaces with anti-rotation teeth	Nut
W	-	Wire-locking holes in coupling nut	All except A-interface	Nut
NW	-	No wire-locking holes in coupling nut	A-interface only	Nut
WL	-	Drilled-head screws in cable clamp, tangential hole in adaptor body	Backshells with cable clamp	Body
WLT	-	Safety wire holes at all threaded junctions plus drilled head screws in cable clamp	Backshells with cable clamp	Body

* consult TE for availability / available values / dimensions
** xx / xx.x specified in mm

Modification Codes (cont...)

Suffix		Meaning	Applies to Series	Affects
POLAMCO	Raychem			
BS	-	Body strap	All *	Body
F	-	Wrench flats on follower	All *	Body
2F	-	Two flats instead of four	All *	Body
DH	D	Drain holes in follower body	All *	Body
PH	-	Potting hole	All *	Body
PH2	-	Two potting holes, 180° apart	All *	Body
PHG	-	Potting hole + outgassing hole	All *	Body
TB	-	With added boot groove	Backshells without cable clamp	Boot groove
NG	-	No boot groove	Backshells that have a boot groove	Boot groove
ET	ET	Earth tag	BT, 91 & 97 series	Termination
WS	-	Drilled-head screws in cable clamp	Backshells with cable clamp	Cable clamp
CL	-	Clinch nuts in cable clamp	Backshells with cable clamp	Cable clamp
S	-	Short screw modification	Backshells with cable clamp	Cable clamp
TS	-	Telescoping screws	Backshells with cable clamp	Cable clamp
LP	-	Low-profile (non-preferred: use kxx or exx)	90° *	Body shape
RW	-	Reduced weight	*	Body shape
Lxx	-	Non-standard length **	All straight *	Body shape
Cxx	-	Non-standard front length **	All 45° *	Body shape
Dxx	-	Non-standard rear length **	All 45° *	Body shape
Kxx	-	Non-standard front length (to entry c/l) **	All 90° except 96 series *	Body shape
Exx	-	Non-standard can length **	All plug-in style 90° *	Body shape
Fxx	-	Non-standard rear length **	All 90° except 96 series *	Body shape
Bxx	-	Non-standard coupling nut diameter **	All *	Body shape
Txx.x	-	Non-standard throat diameter **	All *	Body shape
CON	-	Conductive o-ring	All backshells with o-rings	O-ring
FS	U	Fluorosilicone o-rings / seals	All backshells with o-rings	O-ring
NIS	N	Nitrile o-ring	All backshells with o-rings	O-ring
VS	V	Fluoroelastomer o-ring	All backshells with o-rings	O-ring
NS	-	No seal	All backshells with o-rings	O-ring

* consult TE for availability / available values / dimensions
** xx / xx.x specified in mm

Connector Interface Table

Backshells designed to be used in conjunction with:	POLAMCO Backshell Connector Interface Code	Raychem Backshell Connector Interface Code
MIL-DTL-26482 SERIES I	DG, KG, DM, K, DS, UT	21
PATT 105 / PATT 603*	D	76
MIL-DTL-26482-SERIES II MIL-DTL-83723 SERIES I & II	A	54
MIL-DTL-38999 SERIES I	F (odd numbered shell sizes)	41
MIL-DTL-38999 SERIES II	F (even numbered shell sizes)	41
MIL-DTL-38999 SERIES III / EN3645	H	40
MIL-DTL-38999 SERIES IV	H	40
AS50151	L, LS, LM, LV	18
MIL-DTL-5015D CANNON CA-BAYONET	LC, LCS	58
MIL-DTL-5015 "ABB M.S"	Q	78
MIL-DTL-5015H	A	54
MIL-DTL-83723 SERIES III (BAYONET)	A	54
MIL-DTL 83723 SERIES III (THREADED)	A	54
MIL-DTL-28840	Z	30
EN2997 (SAME AS 83723 SERIES III (STAINLESS))	A	54
ESC10	A	54
ESC11	A	54
VG96912	SM	47
PAT 608	S	79

Solutions for other interfaces may be available - contact TE for further information

POLAMCO Backshell Part Numbering System

91H1 - 17 - 08 - 1 - C - SL - L50 - HE200

Series

Connector interface
Refer to connector interface table - page 9

Angle
1 = Straight
2 = 45°
3 = 90°
4 = 60°
5 = 30°
7 = 75°
3C = Cobra Head
3M = Double Weld 90°

Shell size[1]
2-digit* numerical value equal to connector shell size

Entry Size[2]
Refer to series datasheet - note that some series do not have this field

Material
Refer to material table - page 6

Finish
Refer to finish table - page 6

Series specific option
Refer to series page
Note: there may be multiple fields

Generic modification option
Refer to modification code table - page 7-8
Note: there may be multiple fields

Auxiliary Components Supplied
Refer to individual series

1 - Prefix shell size with F for direct coupling with grommet follower (available on interfaces A, D, F, H, K, SM, Q, Z)

2 - Replace dash before entry size with T2 or T3 (straight only) for type 2 assembly (available when entry diameter exceeds throat diameter - see p44 for example)

* exceptions: RM, L, LC, Q interface - refer to connector interface table for correct shell size

Please note that this system does not apply to the TXR and HexaShield backshells - refer to individual product pages for the correct method

Calculating Wire Bundle DIameter

Where it is not possible to physically measure the wire bundle diameter it can be estimated from the individual wire diameters using the following calculation.

When selecting the backshell cable entry size from provided tables, it is a good idea to err on the side of too large, as an undersized cable can always be enlarged with tape or a grommet to fit the cable clamp. When calculating wire bundle diameters, note that the gauge # of the wire describes only the diameter of the metal conductor, and not the overall diameter including insulation and/or braids. Refer to the appropriate wire specification for the actual diameter of the wire for use in the following calculations.

Steps:

1. Determine each type of wire diameter
2. Choose the multiplication factor from table 1 below
3. Calculate the bundle diameter using the following formula:

$$\text{(Bundle Diameter)} = \text{Factor x } \sqrt{n_1 \text{ x } d_1^2 + n_2^2 + d_2^2 + n_3 \text{ x } d_3^2 + \ldots + n_n \text{ x } d_n^2}$$

Where $d_1 \ldots d_n$ are diameters of each type of wire in the bundle (when using wires from different diameters)
$n_1 \ldots n_n$ the quantity of wires with the same diameter

Factor is chosen in according to the total number of wires in the bundle (*TABLE I*)

4. Add thickness of any shielding or jacketing to core wire bundle diameter.

(Final OD) = (Bundle Diameter) + 2 x (Shield Thickness) + 2 x (Jacket Thickness)

Table 1

MULTIPLICATION FACTORS							
NO OF WIRES	1	2	3	4	5	6	7 AND MORE
FACTOR	1	1.415	1.242	1.205	1.208	1.225	1.15

Product Finder

			SCREEN TERMINATION				STRAIN RELIEF & CABLE SEALING		ADDITIONAL COMPONENTS REQUIRED	
			Overall Screen	Individual/ Multiple Screens	Tool Free	Reworkable	Cable Clamp	Heat Shrink Boot Option	Boot	Band
BAND	**BT Series** Page 14		●					●	●	●
BAND	**88 Series** Page 16		●				●			●
BAND	**AP Series** Page 18		●					●	●	●
BAND	**DS Series** Page 20		●	●				●	●	●
SPRING	**91 Series** Page 22		●		●	●		●	●	
BRAID TAIL	**70 Series** Page 24		●		●	●		●	●	
BRAID TRAP	**95 Series** Page 26		●		●	●	●	●		
CONE	**64 Series** Page 28			●	●	●	●	●		
CONE	**308 Series** Page 30		●		●	●		●	●	

Product Finder

			SCREEN TERMINATION				STRAIN RELIEF & CABLE SEALING		ADDITIONAL COMPONENTS REQUIRED	
			Overall Screen	Individual/ Multiple Screens	Tool Free	Reworkable	Cable Clamp	Heat Shrink Boot Option	Boot	Band
STRAIN RELIEF	**77 Series** Page 32						●			
MESH TAPE	**KMA Series** Page 34		●	●	●	●		●	●	
MESH TAPE	**KMCC Series** Page 36		●	●	●	●	●			
HEAT SHRINK BOOT	**76 Series** Page 38							●	●	
THREAD EXTENDERS & ADAPTERS	**PG Series** Page 40									
THREAD EXTENDERS & ADAPTERS	**DC Series** Page 42									
TINEL RING	**TXR** Page 44		●					●	●	
HEX	**HexaShield** Page 46			●		●		●		

POLAMCO

BT Series

Band Strap Backshell

- Screen termination with a stainless steel band
- Sealing and strain relief of backshell by heat shrink boot
- Calibrated application tooling required
- Banding strap available – see page 50

SPECIFICATIONS

- **Screen Termination:** Overall Screen
- **Strain Relief & Cable Sealing:** Heat Shrink Boot Option
- **Additional Components Required:** Boot, Band

ANGLE 1

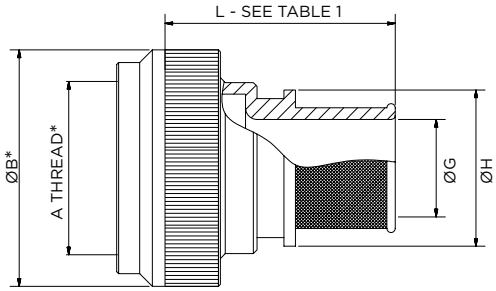

ANGLE 2

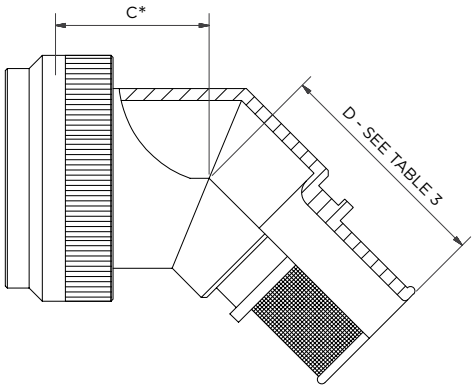

ANGLE 3

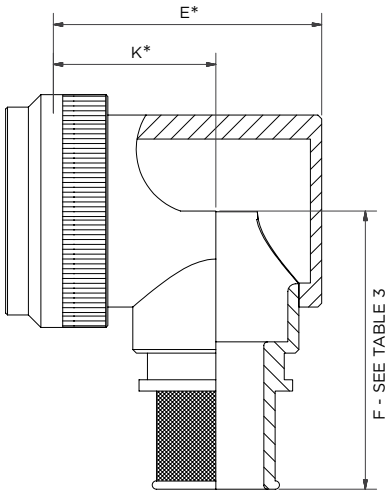

STAINLESS STEEL/BRONZE 90° STYLE

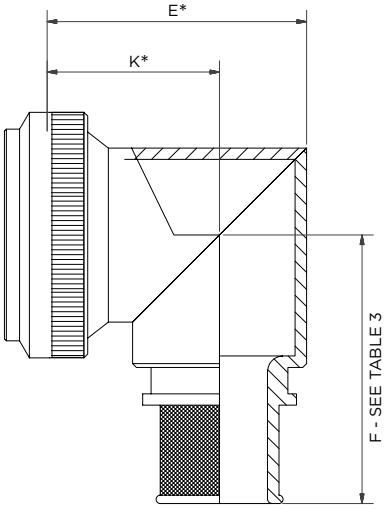

*REFER TO INTERFACE PAGE **CLICK HERE**

Example: **BT H 1 - 17 - 10 - 1 - B - SB**

- Series
- Connector interface*
- Angle
- Shell size
- Entry size
- Material
- Finish
- Band

SB - supplied with standard band
see p50 for options - omit for no band

Table 1 - Length

SHELL SIZE	INTERFACE									
	A	A AD/ SS	D	F	H	K	Q	S	SM	Z
03	28,0	32,0	-	-	-	-	-	-	-	-
08/09	28,0	32,0	34,0	30,0	30,0	34,0	-	32,0	30,0	-
10/10SL/11	28,0	32,0	34,0	30,0	30,0	34,0	36,0	32,0	30,0	-
12/12S/13	28,0	32,0	34,0	30,0	30,0	34,0	-	32,0	30,0	38,2
14/14S/15	28,0	32,0	34,0	30,0	30,0	34,0	36,0	32,0	30,0	38,2
16/16S/17	28,0	32,0	34,0	30,0	30,0	34,0	36,0	32,0	30,0	38,2
18/19	28,0	32,0	34,0	30,0	30,0	34,0	36,0	32,0	30,0	38,2
20/21	28,0	32,0	34,0	30,0	30,0	34,0	36,0	32,0	30,0	38,2
22/23	28,0	32,0	34,0	30,0	30,0	34,0	36,0	32,0	30,0	38,2
24/25	28,0	32,0	34,0	30,0	30,0	34,0	40,0	32,0	30,0	38,2
28/29	36,0	32,0	-	-	-	-	45,0	-	-	38,2
32/33	40,0	40,0	-	-	-	-	50,0	-	-	-
36	45,0	45,0	-	-	-	-	50,0	-	-	-
40	50,0	50,0	-	-	-	-	-	-	-	-
44	60,0	60,0	-	-	-	-	-	-	-	-
48	60,0	60,0	-	-	-	-	-	-	-	-
61	28,0	32,0	-	-	-	-	-	-	-	-

Table 2

ENTRY SIZE	ØG MIN	ØH MAX
03	4,7	13,9
04	6,3	13,9
05	7,9	15,5
06	9,5	17,2
07	11,1	18,7
08	12,7	20,3
09	14,2	21,9
10	15,8	23,5
11	17,4	25,1
12	19,0	26,7
13	20,6	28,3
14	22,2	29,9
15	23,8	31,5
16	25,4	33,1
17	27,0	34,7
18	28,6	36,3
19	30,2	37,9
20	31,8	39,5
21	33,3	41,1
22	35,0	42,7
23	36,5	44,3
24	38,1	45,9

Table 3

SHELL SIZE	ALL INTERFACES	
	D MAX	F MAX
03	26,6	29,4
08/09	26,4	31,5
10/10SL/11	29,4	32.7
12/12S/13	27,3	33,7
14/14S/15	30,0	35,5
16/16S/17	30,5	37,4
18/19	30,9	39,0
20/21	31,6	41,6
22/23	32,3	42,1
24/25	32,9	45,1
28/29	34,1	46,1
32/33	35,4	48,6
36	36,3	52,3
40	36,2	54,8
44	37,8	58,0
48	39,0	61,1
61	31,4	52,1

All dimensions in MM unless otherwise stated.

88 Series

'Band In A Can' Backshell

- Screen termination by standard stainless steel band
- Strain relief by screw on cable clamp 'can'
- 'Can' provides protection of screen termination area
- Banding strap available – see page 50

SPECIFICATIONS

- **Screen Termination:** Overall Screen
- **Strain Relief & Cable Sealing:** Cable Clamp
- **Additional Components Required:** Band

ANGLE 1

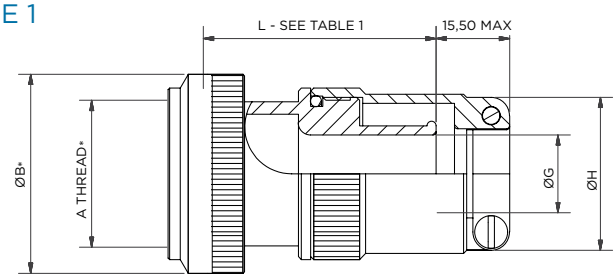

REAR VIEW

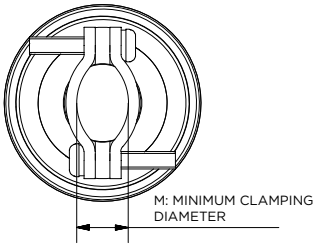

ANGLE 2

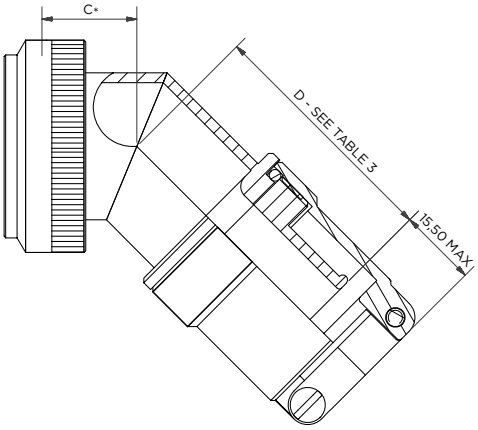

ANGLE 3

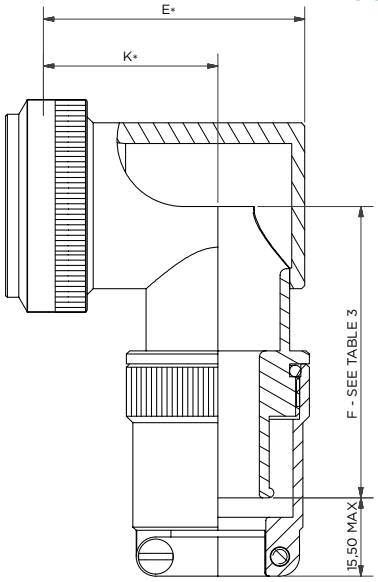

STAINLESS STEEL/BRONZE 90° STYLE

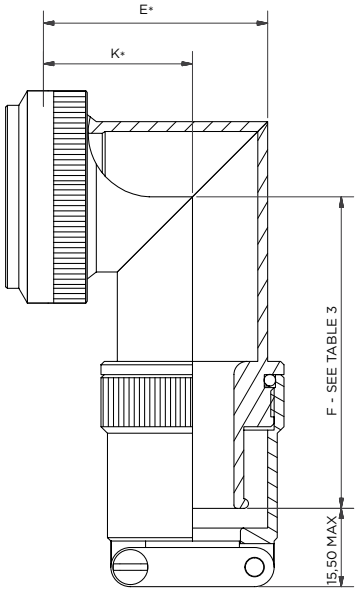

*REFER TO INTERFACE PAGE **CLICK HERE**

Example: **88 F 1 - 13 - 06 - 1 - C - SB**

- Series
- Connector interface*
- Angle
- Shell size
- Entry size
- Material
- Finish
- Band

SB - supplied with standard band
see p50 for options - omit for no band

Table 1 - Length

SHELL SIZE	INTERFACE									
	A	D	F	H	K	LC	Q	S	SM	Z
03	38,0	-	-	-	-	-	-	-	-	-
08/09	38,0	38,0	38,0	38,0	38,0	38,0	-	40,0	38,0	-
10/10SL/11	38,0	38,0	38,0	38,0	38,0	38,0	-	40,0	38,0	41,0
12/12S/13	38,0	38,0	38,0	38,0	38,0	38,0	43,0	40,0	38,0	41,0
14/14S/15	38,0	38,0	38,0	38,0	38,0	38,0	43,0	40,0	38,0	41,0
16/16S/17	38,0	38,0	38,0	38,0	38,0	38,0	43,0	40,0	38,0	41,0
18/19	38,0	38,0	38,0	38,0	38,0	38,0	43,0	40,0	38,0	41,0
20/21	38,0	38,0	38,0	38,0	38,0	38,0	43,0	40,0	38,0	-
22/23	38,0	38,0	38,0	38,0	38,0	38,0	43,0	40,0	38,0	41,0
24/25	38,0	38,0	38,0	38,0	38,0	38,0	43,0	40,0	38,0	41,0
28/29	38,0	-	-	-	-	38,0	43,0	-	-	41,0
32/33	38,0	-	-	-	-	38,0	43,0	-	-	41,0
36	38,0	-	-	-	-	38,0	43,0	-	-	-
40	38,0	-	-	-	-	38,0	-	-	-	-
44	38,0	-	-	-	-	-	-	-	-	-
48	38,0	-	-	-	-	-	-	-	-	-
61	38,0	-	-	-	-	-	-	-	-	-

Table 2

ENTRY SIZE	ØG MIN	ØH MAX	M ±0,5
03	4,7	17,2	6,8
04	6,3	18,8	6,7
05	7,9	20,4	7,8
06	9,5	22,0	7,9
07	11,1	23,5	8,6
08	12,7	25,0	9,0
09	14,2	26,7	10,2
10	15,8	28,3	10,4
11	17,4	30,0	12,5
12	19,0	31,5	12,4
13	20,6	33,0	15,0
14	22,2	34,7	15,4
15	23,8	36,4	16,8
16	25,4	37,8	17,3
17	27,0	39,4	18,8
18	28,6	41,0	19,5
19	30,2	42,6	23,9
20	31,8	44,2	22,4
21	33,3	45,8	23,8
22	35,0	47,3	24,4
23	36,5	50,9	26,4
24	38,1	50,9	26,4

Table 3

SHELL SIZE	ALL INTERFACES	
	D MAX	F MAX
03	38,5	39,9
08/09	50,5	51,9
10/10SL/11	51,3	53,7
12/12S/13	51,5	54,5
14/14S/15	52,1	56,7
16/16S/17	53,4	58,4
18/19	53,7	60,0
20/21	54,5	61,6
22/23	54,9	63,1
24/25	55,3	64,6
28/29	55,3	67,1
32/33	57,4	70,3
36	58,9	75,1
40	60,1	77,3
44	46,7	65,5
48	47,9	68,6
61	40,3	49,6

All dimensions in MM unless otherwise stated.

AP Series

Band Backshell

- Screen termination by standard stainless steel band
- European preferred style, without band retention lip
- Sealing and strain relief of backshell by heat shrink boot
- Banding strap available – see page 50

SPECIFICATIONS

- **Screen Termination:** Overall Screen
- **Strain Relief & Cable Sealing:** Heat Shrink Boot Option
- **Additional Components Required:** Boot, Band

ANGLE 1

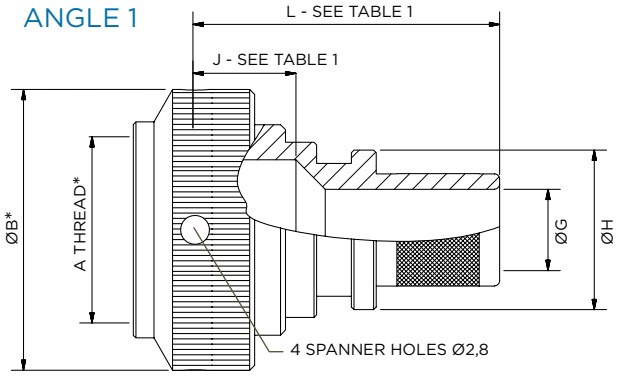

ANGLE 2

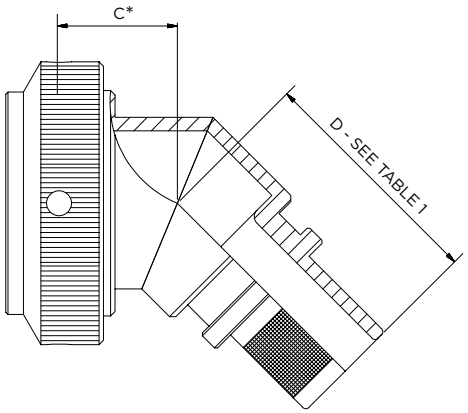

ANGLE 3

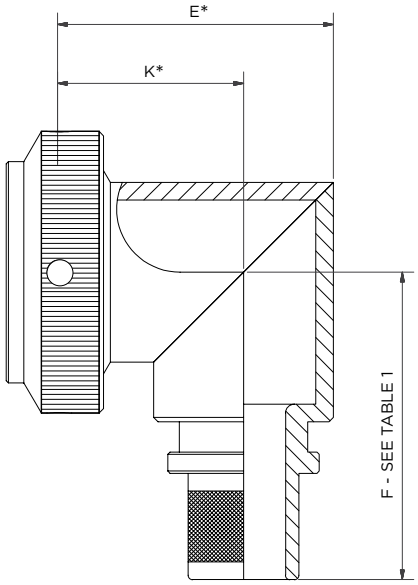

*REFER TO FOLD PAGE ADD 3,2 TO ØB **CLICK HERE**

Example: **AP H 1 - 09 - 08 - 10 - 1 - B - SB**

- **Series** — AP
- **Connector interface*** — H
- **Angle** — 1
- **Shell size** — 09
- **Entry size** — 08
- **Chamber length** (Straight only - omit for angle 2 & 3) — 10
- **Material** — 1
- **Finish** — B
- **Band** — SB

SB - supplied with standard band
see p50 for options - omit for no band

Table 1 - Length

SHELL SIZE	ALL INTERFACES											
	D MAX	F MAX		J=10	J=15	J=20	J=25	J=30	J=35	J=40	J=45	J=50
03	26,6	29,6	L MAX	28,5	33,5	38,5	43,5	48,5	53,5	58,5	63,5	68,5
08/09	26,4	32,2		29,9	34,9	39,9	44,9	49,9	54,9	59,9	64,9	69,9
10/10SL/11	26,3	33,7		30,8	35,8	40,8	45,8	50,8	55,8	60,8	65,8	70,8
12/13	27,2	35,2		31,6	36,6	41,6	46,6	51,6	56,6	61,6	66,6	71,6
14/14S/15	28,0	36,9		32,5	37,5	42,5	47,5	52,5	57,5	62,5	67,5	72,5
16/16S/17	28,3	38,5		33,5	38,5	43,5	48,5	53,5	58,5	63,5	68,5	73,5
18/19	29,1	40,1		34,3	39,3	44,3	49,3	54,3	59,3	64,3	69,3	74,3
20/21	29,5	41,6		35,2	40,2	45,2	50,2	55,2	60,2	65,2	70,2	75,2
22/23	30,4	43,1		36,2	41,2	46,2	51,2	56,2	61,2	66,2	71,2	76,2
24/25	32,1	44,6		37,2	42,2	47,2	52,2	57,2	62,2	67,2	72,2	77,2
28/29	32,1	44,6		36,5	41,5	46,5	51,5	56,5	61,5	66,5	71,5	76,5
32/33	33,7	47,8		37,4	42,4	47,4	52,4	57,4	62,4	67,4	72,4	77,4
36	34,9	51,0		38,3	43,3	48,3	53,3	58,3	63,3	68,3	73,3	78,3
40	36,2	54,2		39,2	44,2	49,2	54,2	59,2	64,2	69,2	74,2	79,2
44	37,8	57,4		40,1	45,1	50,1	55,1	60,1	65,1	70,1	75,1	80,1
48	39,0	60,6		41,0	46,0	51,0	56,0	61,0	66,0	71,0	76,0	81,0
61	31,4	41,4		36,0	41,0	46,0	51,0	56,0	61,0	66,0	71,0	76,0

Table 2 - Entry Size

ENTRY SIZE	ØG MIN	ØH MAX
04	3,2	12,4
06	4,8	12,4
08	6,4	14,0
10	7,9	15,5
12	9,5	17,1
14	11,1	18,7
16	12,7	20,3
18	14,2	21,6
20	15,9	23,5
24	19,0	26,7
28	22,2	29,8
32	25,4	33,0
34	27,0	34,6
36	28,6	36,2
40	31,8	39,4

All dimensions in MM unless otherwise stated.

DS Series

Band Strap Backshell

- Individual and overall screen termination by stainless steel band
- Individual screens terminated inside the backshell, close to the connector in order to minimize cross-talk
- Sealing and strain relief
- Banding strap available – see page 50

SPECIFICATIONS

- **Screen Termination:** Overall Screen, Individual or Multiple Screens
- **Strain Relief & Cable Sealing:** Heat Shrink Boot Option
- **Additional Components Required:** Boot, Band

ANGLE 1

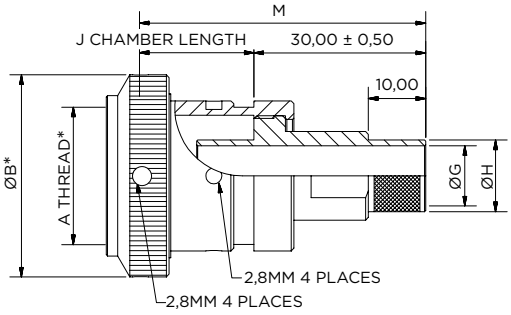

ANGLE 2

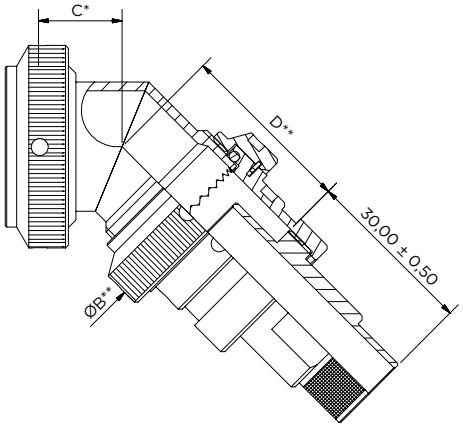

ANGLE 3

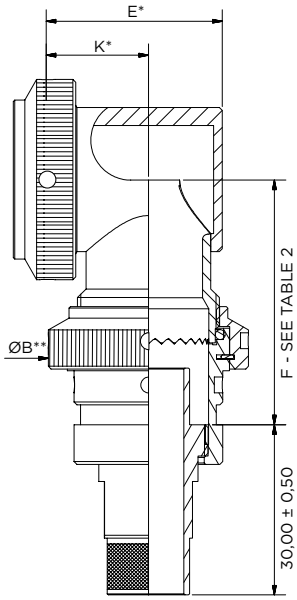

STAINLESS STEEL/BRONZE 90° STYLE

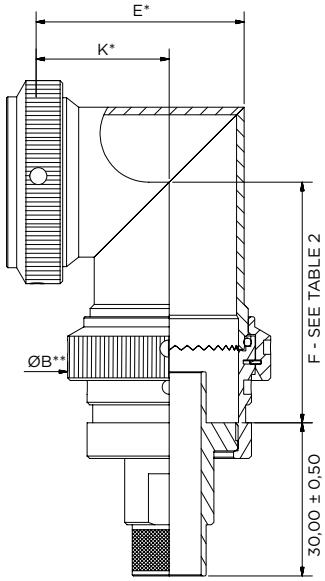

**SEE NOTE

*REFER TO INTERFACE PAGE ADD 3,2 TO ØB **CLICK HERE**

Example: **DS H 1 - 13 - 05 - 20 - 1 - C - SB**

- **Series** — DS
- **Connector interface*** — H
- **Angle** — 1
- **Shell size** — 13
- Straight only: if max entry exceeded replace '-' with 'T3' **SEE NOTE** — -
- **Entry size** — 05
- **Chamber length** — 20
  Straight only (omit for angle 2 & 3)
- **Material** — 1
- **Finish** — C
- **Band** — SB
  SB - supplied with 2 x standard bands
  see p50 for options - omit for no bands

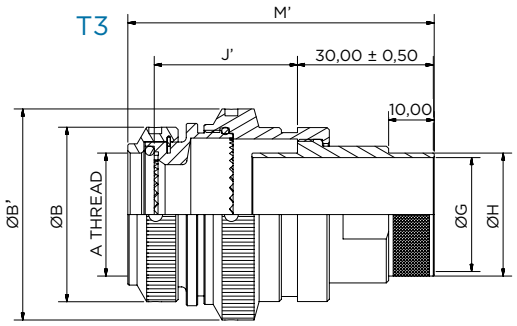

Table 1

J ± 0,2 CHAMBER	J'± 2,0 CHAMBER	M MAX	M' MAX
20	-	60,0	-
25	-	65,0	-
30	30	70,0	70,0
35	35	75,0	75,0
40	40	80,0	80,0
45	45	85,0	85,0
50	50	90,0	90,0

Table 2

SHELL SIZE	ALL INTERFACES		
	D MAX	F MAX	MAX ENTRY*
08/09	*	38,4	*
10/10SL/11	*	39,0	*
12/12S/13	30,5	39,6	05
14/14S/15	31,0	43,6	07
16/16S/17	32,0	45,1	10
18/19	33,0	46,6	12
20/21	33,5	48,1	13
22/23	34,0	49,6	15
24/25	34,5	51,1	16

Table 3

ENTRY SIZE	ØG	ØH	ØB' MAX	D' MAX
03	4,0	6,0	27,3	30,5
04	5,5	7,5	27,3	30,5
05	7,5	9,5	27,3	30,5
06	9,5	11,5	31,8	31,0
07	10,5	12,5	31,8	31,0
08	12,5	14,5	35,3	32,0
09	14,0	16,0	35,3	32,0
10	15,5	17,5	35,3	32,0
11	17,0	19,0	38,3	33,0
12	18,5	20,5	38,3	33,0
13	20,0	22,0	39,8	33,5
14	21,5	23,5	44,3	34,0
15	23,0	25,0	44,3	34,0
16	25,0	27,0	47,2	34,5

**NOTE
Max entry applies to straight configuration.
when max entry is exceeded, straight configuration must be ordered as T3 version (see indicator in part number breakdown).
Shell sizes 09 and 11 only exist in T3 version.

Exceeding max entry also affects dimension D in 45° configuration (see D') and rear nut diameter in 45° and 90° configurations (ØB becomes ØB').

All dimensions in MM unless otherwise stated.

POLAMCO

91 Series

Spring Backshell

- Tool-free screen termination by stainless steel constant force spring
- Sealing and strain relief of backshell by heat shrink boot
- Standard range - many sizes available from stock

SPECIFICATIONS

- **Screen Termination:** Overall screen, tool-free, reworkable
- **Strain Relief & Cable Sealing:** Heat shrink boot option
- **Additional Components Required:** Boot

ANGLE 1

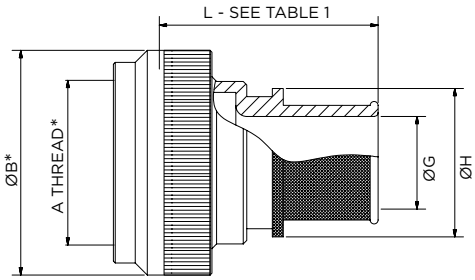

CONSTANT FORCE SPRING

See Table 4

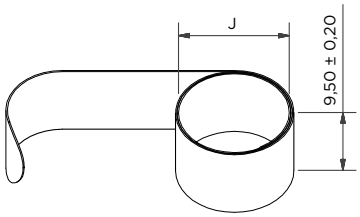

ANGLE 2

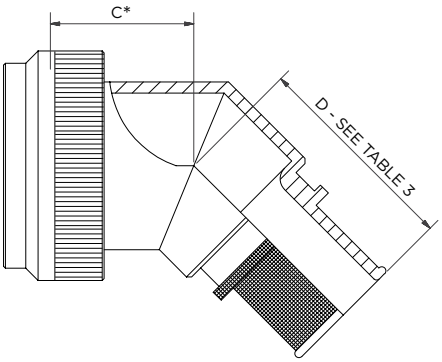

ANGLE 3

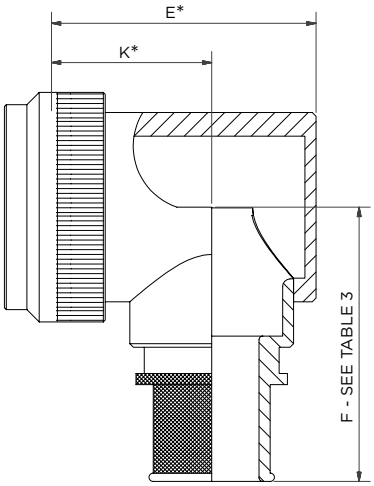

STAINLESS STEEL/BRONZE 90° STYLE

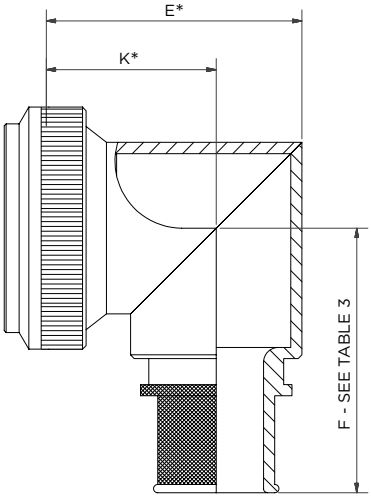

*REFER TO INTERFACE PAGE **CLICK HERE**

Example: **91 H 1 - 19 - 08 - 1 - B - HE200**

- Series
- Connector interface*
- Angle
- Shell size
- Entry size
- Material
- Finish
- Spring Reference

Table 1 - Length

SHELL SIZE	INTERFACE									
	A	A AD/SS	D	F	H	K	Q	S	SM	Z
03	28,0	32,0	-	-	-	-	-	-	-	-
08/09	28,0	32,0	34,0	30,0	30,0	34,0	-	32,0	30,0	-
10/10SL/11	28,0	32,0	34,0	30,0	30,0	34,0	36,0	32,0	30,0	-
12/12S/13	28,0	32,0	34,0	30,0	30,0	34,0	-	32,0	30,0	38,2
14/14S/15	28,0	32,0	34,0	30,0	30,0	34,0	36,0	32,0	30,0	38,2
16/16S/17	28,0	32,0	34,0	30,0	30,0	34,0	36,0	32,0	30,0	38,2
18/19	28,0	32,0	34,0	30,0	30,0	34,0	36,0	32,0	30,0	38,2
20/21	28,0	32,0	34,0	30,0	30,0	34,0	36,0	32,0	30,0	38,2
22/23	28,0	32,0	34,0	30,0	30,0	34,0	36,0	32,0	30,0	38,2
24/25	28,0	32,0	34,0	30,0	30,0	34,0	40,0	32,0	30,0	38,2
28/29	36,0	32,0	-	-	-	-	45,0	-	-	38,2
32/33	40,0	40,0	-	-	-	-	50,0	-	-	-
36	45,0	45,0	-	-	-	-	50,0	-	-	-
40	50,0	50,0	-	-	-	-	-	-	-	-
44	60,0	60,0	-	-	-	-	-	-	-	-
48	60,0	60,0	-	-	-	-	-	-	-	-
61	28,0	32,0	-	-	-	-	-	-	-	-

Table 2

ENTRY SIZE	ØG MIN	ØH MAX	SPRING REF
03	4,7	13,9	HE050
04	6,3	13,9	HE050
05	7,9	15,5	HE100
06	9,5	17,2	HE100
07	11,1	18,7	HE100
08	12,7	20,3	HE200
09	14,2	21,9	HE200
10	15,8	23,5	HE200
11	17,4	25,1	HE200
12	19,0	26,7	HE300
13	20,6	28,3	HE300
14	22,2	29,9	HE300
15	23,8	31,5	HE300
16	25,4	33,1	HE300
17	27,0	34,7	HE400
18	28,6	36,3	HE400
19	30,2	37,9	HE400
20	31,8	39,5	HE400
21	33,3	41,1	HE400
22	35,0	42,7	HE400
23	36,5	44,3	HE400
24	38,1	45,9	HE400

Table 3

SHELL SIZE	ALL INTERFACES	
	D MAX	F MAX
03	26,6	29,4
08/09	26,4	31,5
10/10SL/11	29,4	32.7
12/12S/13	27,3	33,7
14/14S/15	30,0	35,5
16/16S/17	30,5	37,4
18/19	30,9	39,0
20/21	31,6	41,6
22/23	32,3	42,1
24/25	32,9	45,1
28/29	34,1	46,1
32/33	35,4	48,6
36	36,3	52,3
40	36,2	54,8
44	37,8	58,0
48	39,0	61,1
61	31,4	52,1

Table 4

SPRING REF	J MAX (unconstrained)
HE 050	7,5
HE 100	9,1
HE 200	12,8
HE 300	17,9
HE 400	21,8

All dimensions in MM unless otherwise stated.

POLAMCO

70 Series

Braid Tail Backshell

- High-reliability low profile magna form ring termination
- Sealing and strain relief of backshell by heat shrink boot
- Pre-terminated screenbraid sock

SPECIFICATIONS

- **Screen Termination:** Overall Screen, tool free, reworkable
- **Strain Relief & Cable Sealing:** Heat Shrink Boot Option
- **Additional Components Required:** Boot

ANGLE 1

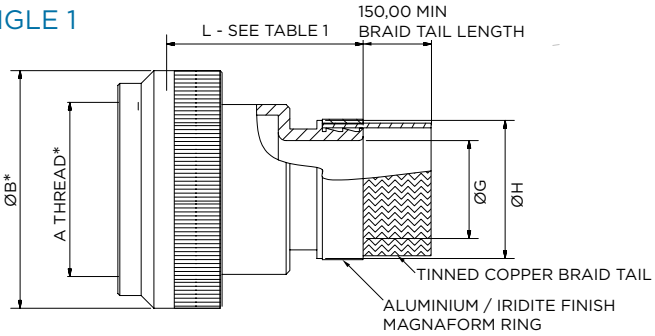

ANGLE 2

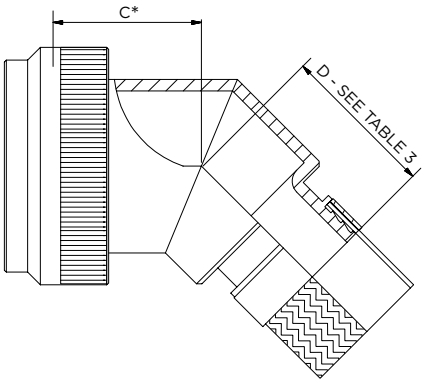

ANGLE 3

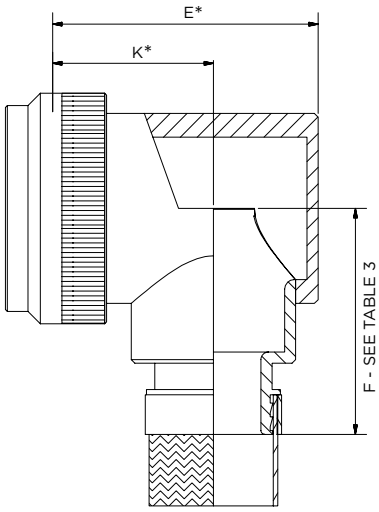

STAINLESS STEEL/BRONZE
90° STYLE

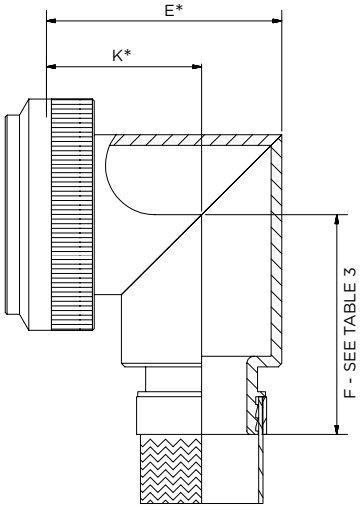

*REFER TO INTERFACE PAGE **CLICK HERE**

Example: **70 H 1 - 17 - 08 - 1 - C**

- Series
- Connector interface*
- Angle
- Shell size
- Entry size
- Material
- Finish

Table 1 - Length

SHELL SIZE	INTERFACE								
	A	D	F	H	K	Q	S	SM	Z
03	25,5	-	-	-	-	-	-	-	-
08/09	25,5	32,5	25,5	23,5	32,5	-	25,9	25,5	-
10/10SL/11	25,5	32,5	25,5	23,5	32,5	36,0	25,9	25,5	30,0
12/12S/13	25,5	32,5	25,5	23,5	32,5	-	25,9	25,5	30,0
14/14S/15	25,5	32,5	25,5	23,5	32,5	36,0	25,9	25,5	30,0
16/16S/17	25,5	32,5	25,5	23,5	32,5	36,0	25,9	25,5	30,0
18/19	25,5	32,5	25,5	23,5	32,5	36,0	25,9	25,5	30,0
20/21	25,5	32,5	25,5	23,5	32,5	36,0	25,9	25,5	30,0
22/23	25,5	32,5	25,5	23,5	32,5	36,0	25,9	25,5	30,0
24/25	25,5	32,5	25,5	23,5	32,5	36,0	25,9	25,5	30,0
28/29	36,0	-	-	-	-	36,0	-	-	30,0
32/33	40,0	-	-	-	-	36,0	-	-	30,0
36	45,0	-	-	-	-	36,0	-	-	-
40	50,5	-	-	-	-	-	-	-	-
44	50,5	-	-	-	-	-	-	-	-
48	50,5	-	-	-	-	-	-	-	-
61	28,0	-	-	-	-	-	-	-	-

Table 2

ENTRY SIZE	ØG MIN	ØH +/- 0,25
03	4,7	13,1
04	6,3	13,1
05	7,9	13,1
06	9,5	17,9
07	11,1	17,9
08	12,7	17,9
09	14,2	17,9
10	15,8	24,2
11	17,4	24,2
12	19,0	24,2
13	20,6	24,2
14	22,2	30,6
15	23,8	30,6
16	25,4	30,6
17	27,0	33,2
18	28,6	33,2
19	30,2	36,4
20	31,8	42,0
21	33,3	42,0
22	35,0	42,0
23	36,5	42,0
24	38,1	42,0

Table 3

SHELL SIZE	ALL INTERFACES	
	D MAX	F MAX
03	26,6	29,4
08/09	17,6	25,5
10/11	18,7	25,7
10SL/12/12S/13	19,7	27,2
14/14S/15	20,6	28,7
16/16S/17	21,4	32,3
18/19	22,1	32,4
20/21	22,6	33,6
22/23	26,8	35,1
24/25	27,3	36,6
28/29	27,0	39,9
32/33	27,0	43,1
36	28,8	47,1
40	26,6	49,3
44	28,3	52,5
48	29,5	55,6
61	21,9	36,6

All dimensions in MM unless otherwise stated.

POLAMCO

95 Series

Braid Trap Backshell

- Tool-free 360° screen termination by barrel thread braid trap system
- Sealing and strain relief of backshell by heat shrink boot
- Cable clamp backshell version also available

SPECIFICATIONS

- **Screen Termination:** Overall screen, tool-free, reworkable
- **Strain Relief & Cable Sealing:** Cable clamp, heat shrink boot option
- **Additional Components Required:** None

ANGLE 1

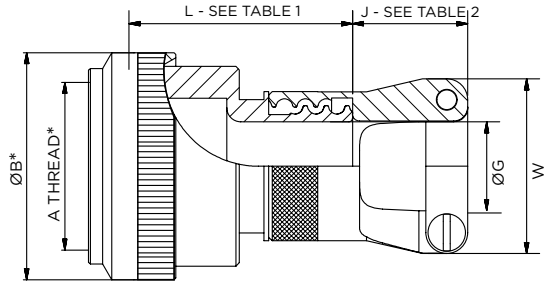

REAR VIEW

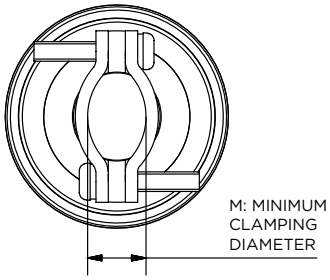

PLAIN NUT OPTION

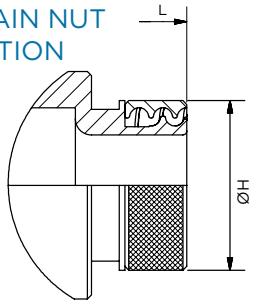

ANGLE 2

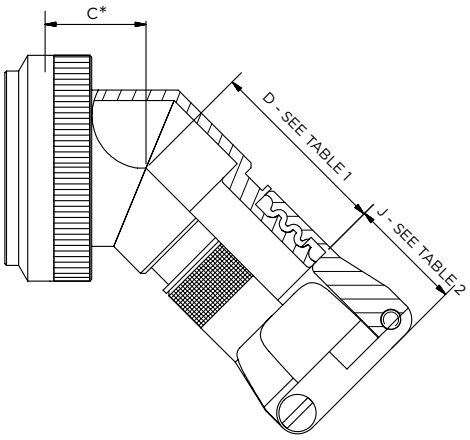

ANGLE 3

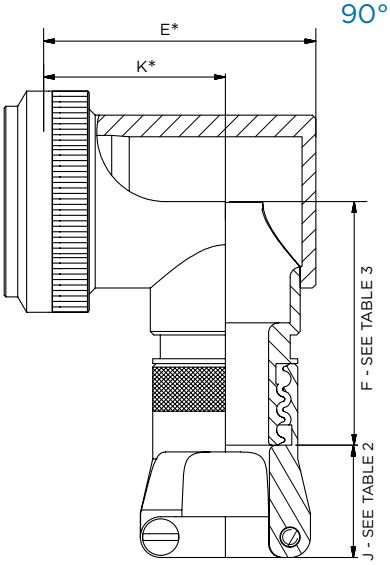

STAINLESS STEEL/BRONZE 90° STYLE

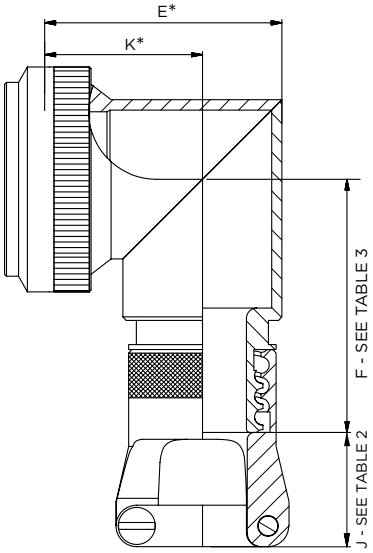

*REFER TO INTERFACE PAGE **CLICK HERE**

Example: **95 H 1 - 21 - 12 - 1 - B - CC**

- **Series** — 95
- **Connector interface*** — H
- **Angle** — 1
- **Shell size** — 21
- **Entry size** — 12
- **Material** — 1
- **Finish** — B
- **Cable clamp option** (omit for plain nut) — CC

Table 1 - Length

SHELL SIZE	INTERFACE								
	A	D	F	H	K	Q	S	SM	Z
03	**28,0** / 28,0	-	-	-	-	-	-	-	-
08/09	**28,0** / 28,0	**39,0** / 34,0	**32,0** / 28,0	**32,0** / 28,0	**38,0** / 34,0	-	**28,0** / 28,0	**32,0** / 30,0	-
10/10SL/11	**28,0** / 28,0	**39,0** / 34,0	**32,0** / 28,0	**32,0** / 28,0	**38,0** / 34,0	-	**28,0** / 28,0	**32,0** / 30,0	**30,0** / 38,0
12/12S/13	**28,0** / 28,0	**39,0** / 34,0	**32,0** / 28,0	**32,0** / 28,0	**38,0** / 34,0	**40,0** / 36,0	**28,0** / 28,0	**32,0** / 30,0	**30,0** / 38,0
14/14S/15	**28,0** / 28,0	**39,0** / 34,0	**32,0** / 28,0	**32,0** / 28,0	**38,0** / 34,0	**40,0** / 36,0	**28,0** / 28,0	**32,0** / 30,0	**30,0** / 38,0
16/16S/17	**28,0** / 28,0	**39,0** / 34,0	**32,0** / 28,0	**32,0** / 28,0	**38,0** / 34,0	**40,0** / 36,0	**28,0** / 28,0	**32,0** / 30,0	**30,0** / 38,0
18/19	**28,0** / 28,0	**39,0** / 34,0	**32,0** / 28,0	**32,0** / 28,0	**38,0** / 34,0	**40,0** / 36,0	**28,0** / 28,0	**32,0** / 30,0	**30,0** / 38,0
20/21	**28,0** / 28,0	**39,0** / 34,0	**32,0** / 28,0	**32,0** / 28,0	**38,0** / 34,0	**40,0** / 36,0	**28,0** / 28,0	**32,0** / 30,0	-
22/23	**28,0** / 28,0	**39,0** / 34,0	**32,0** / 28,0	**32,0** / 28,0	**38,0** / 34,0	**40,0** / 36,0	**28,0** / 28,0	**32,0** / 30,0	**30,0** / 38,0
24/25	**28,0** / 28,0	**39,0** / 34,0	**32,0** / 28,0	**32,0** / 28,0	**38,0** / 34,0	**40,0** / 36,0	**28,0** / 28,0	**32,0** / 30,0	**30,0** / 38,0
28/29	**28,0** / 28,0	-	-	-	-	**40,0** / 36,0	-	-	**30,0** / 38,0
32/33	**40,0** / 40,0	-	-	-	-	**40,0** / 36,0	-	-	**30,0** / 38,0
36	**40,0** / 40,0	-	-	-	-	**40,0** / 36,0	-	-	-
40	**40,0** / 40,0	-	-	-	-	-	-	-	-
44	**40,0** / 40,0	-	-	-	-	-	-	-	-
48	**40,0** / 40,0	-	-	-	-	-	-	-	-
61	**40,0** / 40,0	-	-	-	-	-	-	-	-

CABLE CLAMP LENGTH / PLAIN NUT LENGTH

Table 2

ENTRY SIZE	ØG MIN	W MAX	ØH MAX	J MAX	M +/- 0,5
03	4,7	17,3	15,2	14,7	5,8
04	6,3	18,9	15,2	14,7	5,7
05	7,9	20,5	16,8	14,7	6,8
06	9,5	22,1	18,4	14,7	6,9
07	11,1	23,6	20,0	14,7	8,1
08	12,7	25,1	21,6	17,7	8,5
09	14,2	26,8	23,2	17,7	9,7
10	15,8	28,4	24,8	17,7	10,4
11	17,4	30,1	26,4	20,7	11,5
12	19,0	31,6	27,9	20,7	11,4
13	20,6	33,1	29,5	20,7	14,0
14	22,2	34,8	31,1	23,7	15,4
15	23,8	36,5	32,7	23,7	16,8
16	25,4	37,9	34,3	23,7	17,3
17	27,0	39,5	35,9	23,7	18,8
18	28,6	41,1	37,5	23,7	19,5
19	30,2	42,7	39,3	25,2	25,9
20	31,8	44,3	40,6	25,2	23,4
21	33,3	45,8	42,2	25,2	24,8
22	35,0	-	43,8	-	-
23	36,5	47,4	45,4	25,2	25,4
24	38,1	50,9	47,0	25,2	27,4

Table 3

SHELL SIZE	ALL INTERFACES	
	D MAX	F MAX
03	27,6	34,4
08/09	27,4	33,8
10/11	29,4	35,5
10SL/12/12S/13	28,1	37,0
14/14S/15	30,0	38,6
16/16S/17	30,5	40,2
18/19	32,0	40,9
20/21	31,6	42,5
22/23	33,8	44,1
24/25	34,3	45,6
28/29	34,1	50,3
32/33	35,4	53,6
36	36,3	56,8
40	37,1	59,8
44	38,8	63,0
48	40,0	66,1
61	32,4	47,1

All dimensions in MM unless otherwise stated.

POLAMCO

64 Series

Cone Backshell

- Individual screen termination using castellated cone
- Sealing and strain relief of backshell by heat shrink boot
- Cable clamp backshell version also available

SPECIFICATIONS

- **Screen Termination:** Individual or multiple screens, tool-free, reworkable
- **Strain Relief & Cable Sealing:** Cable clamp, heat shrink boot option
- **Additional Components Required:** None

ANGLE 1

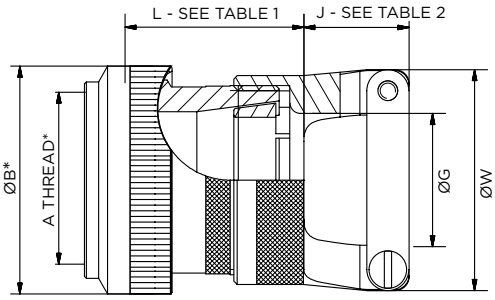

REAR VIEW

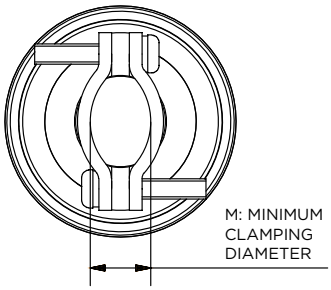

PLAIN NUT OPTION

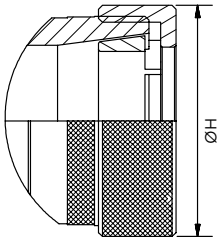

ANGLE 2

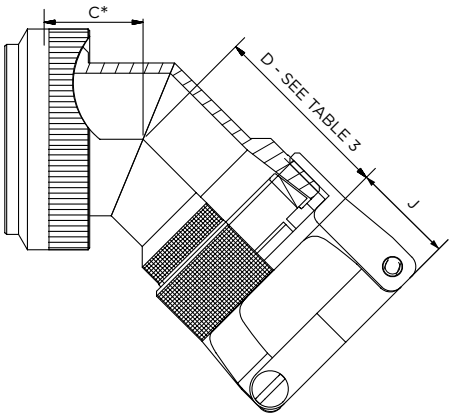

ANGLE 3

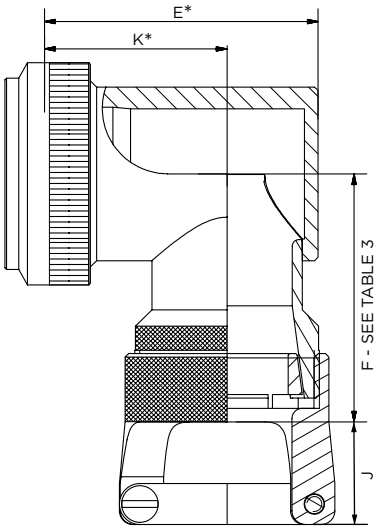

STAINLESS STEEL/BRONZE 90° STYLE

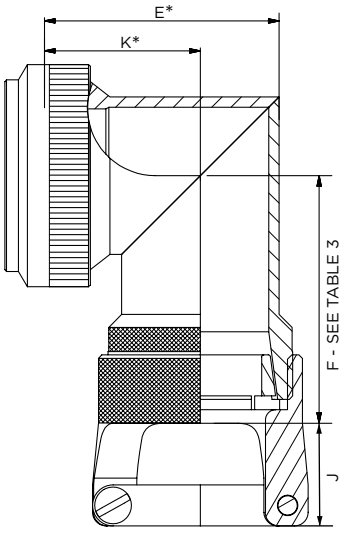

*REFER TO INTERFACE PAGE **CLICK HERE**

Example: 64 H 1 - 21 - 13 - 1 - C - CC

- Series
- Connector interface*
- Angle
- Shell size
- Entry size
- Material
- Finish
- Cable clamp option

Table 1 - Length

SHELL SIZE	INTERFACE							
	A	D	F	H	K	Q	S	SM
08/09	33,5	37,5	33,5	33,5	37,5	-	32,0	33,5
10/11	33,5	37,5	33,5	33,5	37,5	-	32,0	33,5
10SL/12/12S/13	33,5	37,5	33,5	33,5	37,5	35,5	32,0	33,5
14/14S/15	33,5	37,5	33,5	33,5	37,5	35,5	32,0	33,5
16/16S/17	33,5	37,5	33,5	33,5	37,5	35,5	32,0	33,5
18/19	33,5	37,5	33,5	33,5	37,5	35,5	32,0	33,5
20/21	33,5	37,5	33,5	33,5	37,5	35,5	32,0	33,5
22/23	33,5	37,5	33,5	33,5	37,5	35,5	32,0	33,5
24/25	33,5	37,5	33,5	33,5	37,5	35,5	32,0	33,5
28/29	44,0	-	-	-	-	35,5	-	-
32/33	44,0	-	-	-	-	35,5	-	-
36	44,0	-	-	-	-	35,5	-	-
40	44,0	-	-	-	-	-	-	-
44	44,0	-	-	-	-	-	-	-
48	44,0	-	-	-	-	-	-	-
61	44,0	-	-	-	-	-	-	-

Table 2

ENTRY SIZE	ØG MIN	ØW MAX	ØH MAX	J MAX	M ±0,5
08/09	6,6	20,7	16,0	15,2	7,8
10/11	9,3	23,8	19,0	15,2	8,6
12 /13	12,6	27,0	22,0	15,2	10,2
14/15	14,6	28,6	26,5	15,2	10,4
16/17	17,7	31,8	29,8	15,2	12,4
18/19	19,8	35,0	33,0	18,2	15,4
20/21	23,0	38,1	35,0	18,2	17,3
22/23	26,2	39,7	38,0	18,2	18,8
24/25	29,1	44,5	41,0	18,2	22,4

NOTE:
Use odd-numbered entry size code when shell size has an odd number

Table 3

SHELL SIZE	ALL INTERFACES	
	D MAX	F MAX
08/09	33,6	35,1
10/11	34,4	36,9
10SL/12/12S/13	35,3	38,4
14/14S/15	35,7	39,9
16/16S/17	36,5	41,6
18/19	36,8	43,2
20/21	37,6	44,8
22/23	38,5	46,3
24/25	38,9	47,8
28/29	34,6	44,4
32/33	35,9	49,6
36	36,7	52,8
40	34,6	55,8
44	36,3	59,0
48	37,5	62,1
61	29,9	43,1

All dimensions in MM unless otherwise stated.

POLAMCO

308 Series

Cone Backshell

- Screen termination using two overlapping cones
- Sealing and strain relief of backshell by heat shrink boot

SPECIFICATIONS

- **Screen Termination:** Overall Screen, Tool-free, Reworkable
- **Strain Relief & Cable Sealing:** Heat Shrink Boot Option
- **Additional Components Required:** Boot

ANGLE 1

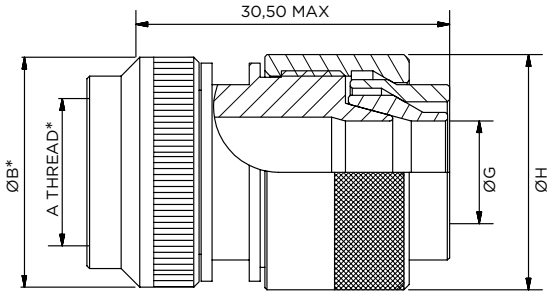

ANGLE 2

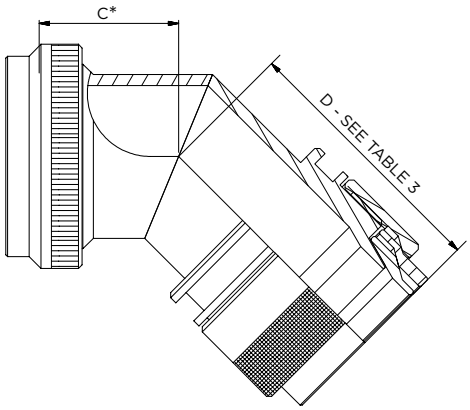

ANGLE 3

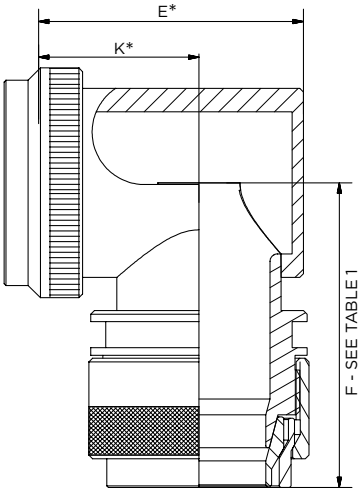

STAINLESS STEEL/BRONZE 90° STYLE

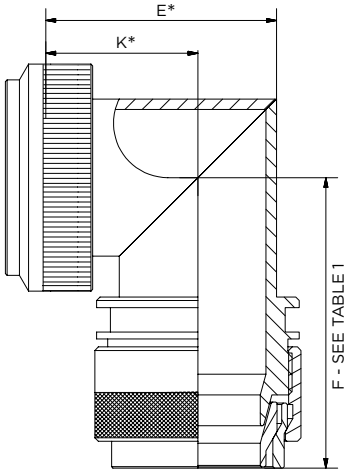

*REFER TO INTERFACE PAGE **CLICK HERE**

Example: **308 H 1 - 17 - 1 - C**

- Series
- Connector interface
- Angle
- Shell size
- Material
- Finish

Table 1

SHELL SIZE	ALL INTERFACES			
	D MAX	F MAX	ØG MIN	ØH MAX
08/09	33,3	35,2	6,9	18,4
10/10SL/11	34,5	37,0	9,6	22,0
12/12S/13	34,9	38,5	12,7	24,0
14/14S/15	35,8	40,0	14,8	27,0
16/16S/17	36,6	41,2	17,9	29,5
18/19	36,6	43,3	19,9	33,9
20/21	37,7	44,9	23,1	37,0
22/23	38,1	46,4	26,2	40,8
24/25	39,0	47,9	28,8	43,0

All dimensions in MM unless otherwise stated.

POLAMCO

77 Series

Strain Relief Backshell

- Backshell entry sizes to match cable bundle diameter
- Extended follower offers protection to rear of connector

SPECIFICATIONS

- **Screen Termination:** None
- **Strain Relief & Cable Sealing:** Cable clamp
- **Additional Components Required:** None

ANGLE 1

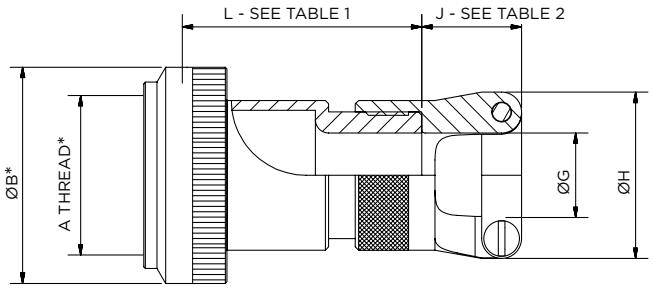

REAR VIEW

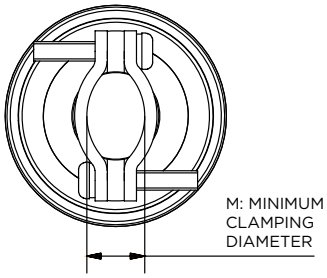

ANGLE 2

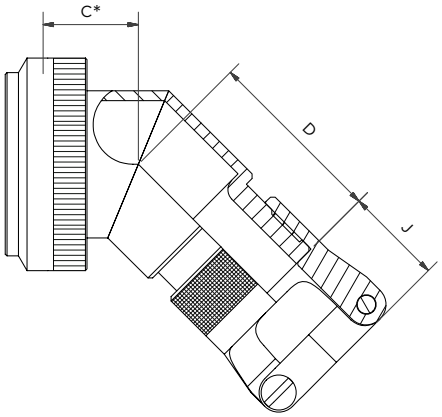

ANGLE 3

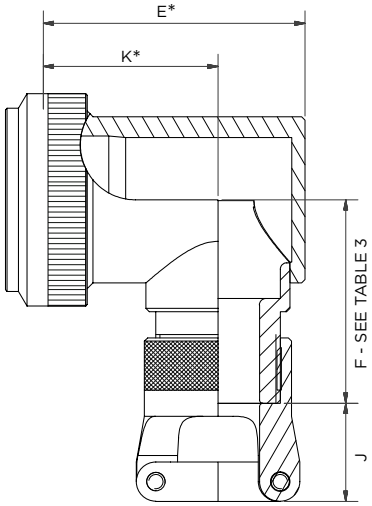

STAINLESS STEEL/BRONZE 90° STYLE

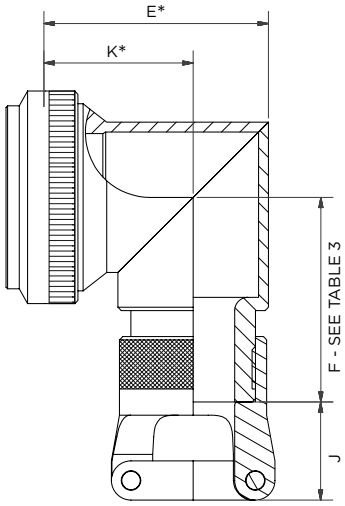

*REFER TO INTERFACE PAGE **CLICK HERE**

Example: 77 H 1 - 17 - 08 - 1 - C

- Series
- Connector interface*
- Angle
- Shell size
- Entry size
- Material
- Finish

Table 1 - Length

SHELL SIZE	INTERFACE							
	A	D	F	H	K	Q	S	Z
03	36,0	-	-	-	-	-	-	-
08/09	36,0	36,0	36,0	36,0	36,0	-	36,0	-
10/10SL/11	36,0	36,0	36,0	36,0	36,0	-	36,0	30,0
12/12S/13	36,0	36,0	36,0	36,0	36,0	36,0	36,0	30,0
14/14S/15	36,0	36,0	36,0	36,0	36,0	36,0	36,0	30,0
16/16S/17	36,0	36,0	36,0	36,0	36,0	36,0	36,0	30,0
18/19	36,0	36,0	36,0	36,0	36,0	36,0	36,0	30,0
20/21	36,0	36,0	36,0	36,0	36,0	36,0	36,0	30,0
22/23	36,0	36,0	36,0	36,0	36,0	36,0	36,0	30,0
24/25	36,0	36,0	36,0	36,0	36,0	36,0	36,0	30,0
28/29	36,0	-	-	-	-	36,0	-	30,0
32/33	40,0	-	-	-	-	36,0	-	30,0
36	45,0	-	-	-	-	36,0	-	-
40	50,5	-	-	-	-	-	-	-
44	50,5	-	-	-	-	-	-	-
48	50,5	-	-	-	-	-	-	-
61	28,0	-	-	-	-	-	-	-

Table 2

ENTRY SIZE	ØG MIN	ØH MAX	M ±0,5	J MAX
03	4,7	17,1	6,8	15,0
04	6,3	19,1	6,7	15,0
05	7,9	20,7	7,8	15,0
06	9,5	22,3	7,9	15,0
07	11,1	23,8	8,6	15,0
08	12,7	25,3	9,0	15,0
09	14,2	27,0	10,2	15,0
10	15,8	28,6	10,4	15,0
11	17,4	30,3	11,5	15,0
12	19,0	31,8	12,4	15,0
13	20,6	33,3	15,0	15,0
14	22,2	35,0	15,4	18,0
15	23,8	36,7	16,8	18,0
16	25,4	38,1	17,3	18,0
18	28,6	39,7	18,8	18,0
20	31,8	44,5	22,4	18,0
22	35,0	47,6	24,4	18,0
24	38,1	51,2	26,4	18,0

Table 3

SHELL SIZE	ALL INTERFACES	
	D MAX	F MAX
03	25,1	26,4
08/09	24,6	26,4
10/10SL/11	30,5	38,3
12/12S/13	26,2	28,3
14/14S/15	31,5	29,8
16/16S/17	33,0	33,4
18/19	34,0	33,5
20/21	35,5	34,7
22/23	36,5	36,4
24/25	38,0	40,9
28/29	39,0	40,0
32/33	40,5	45,6
36	41,5	48,8
40	43,0	51,8
44	36,3	55,0
48	37,5	58,1
61	29,9	39,1

All dimensions in MM unless otherwise stated.

KMA Series

Mesh Tape Backshell

- 360° termination of multiple individual screens
- Mesh tape bundle system creates windowless EMI barrier even without overall screenbraid
- Sealing and strain relief of backshell by heat shrink boot

SPECIFICATIONS

- **Screen Termination:** Overall Screen, Individual or Multiple Screens, Tool-free, Reworkable
- **Strain Relief & Cable Sealing:** Heat Shrink Boot Option
- **Additional Components Required:** Boot

ANGLE 1

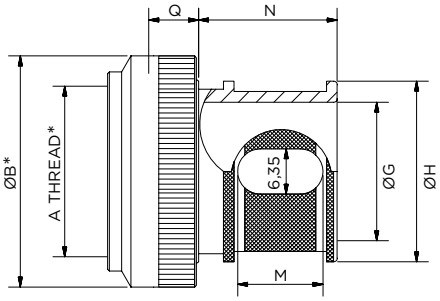

ANGLE 2

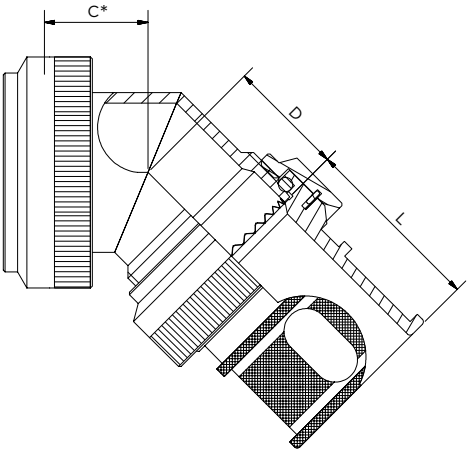

ANGLE 3

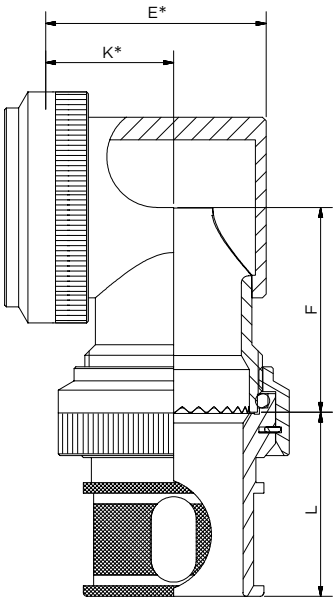

STAINLESS STEEL/BRONZE 90° STYLE

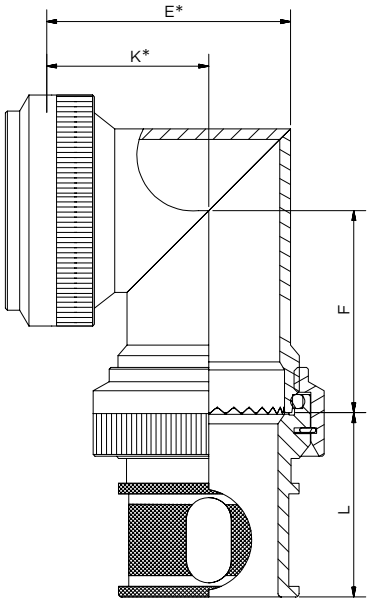

*REFER TO INTERFACE PAGE **CLICK HERE**

Example: **KMA H 1 - 11 - 1 - B - S1 - HE**

- Series
- Connector interface*
- Angle
- Shell size
- Material
- Finish
- Slot Option
- Termination option

HE - Constant force spring, omit for supplied without spring

Table 1

SLOT OPTION	L ±0,5	M ±0,25	N ±0,25	MESH-TAPE PART NUMBER (ORDERED SEPARATELY- 25 M REEL)
S1	26,5	12,0	19,5	KM (6)
S2	34,5	20,0	27,5	KM (13)

Table 2

SHELL SIZE	ALL INTERFACES			
	D MAX	F MAX	ØG MIN	ØH MAX
08/09	14,5	21,5	6,6	13,2
10/11	15,0	23,0	9,3	16,7
10SL/12/12S/13	15,5	24,5	12,8	20,0
14/14S/15	16,0	28,5	14,7	22,7
16/16S/17	17,0	30,0	17,8	25,4
18/19	18,0	31,5	19,5	28,3
20/21	18,5	33,0	21,9	31,6
22/23	19,0	34,5	25,2	34,7
24/25	19,5	36,0	28,3	37,9

Table 3

INTERFACE	A	D	F	H	K	S	SM
Q DIMENSION	8,5	11,0	7,0	7,0	11,0	11,0	7,0

All dimensions in MM unless otherwise stated.

POLAMCO

KMCC Series

Mesh Tape Backshell

- 360° termination of multiple individual screens
- Mesh tape bundle system creates windowless EMI barrier even without overall screenbraid
- Strain relief by cable clamp allows tool free assembly and re-work

SPECIFICATIONS

- **Screen Termination:** Overall Screen, Individual or Multiple Screens, Tool-free, Reworkable
- **Strain Relief & Cable Sealing:** Cable Clamp
- **Additional Components Required:** None

ANGLE 1

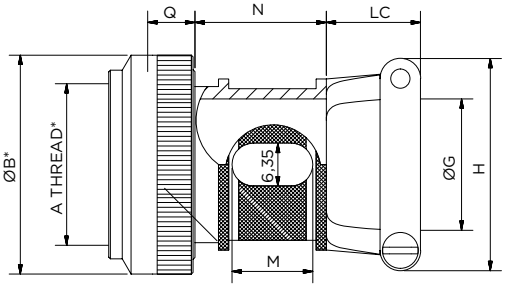

ANGLE 2

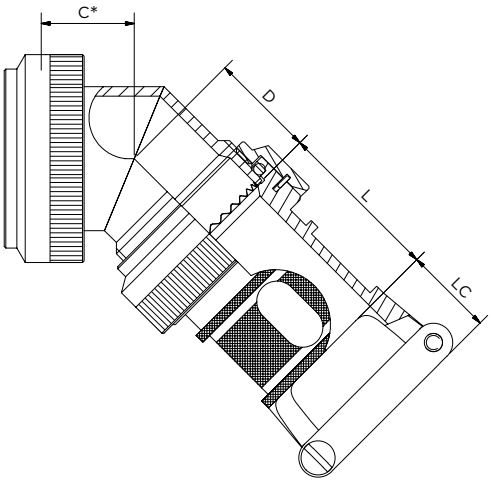

ANGLE 3

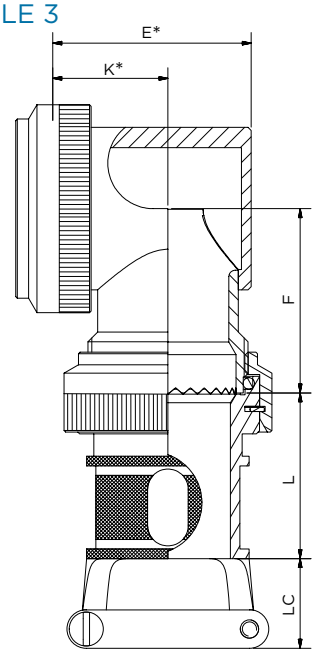

STAINLESS STEEL/BRONZE 90° STYLE

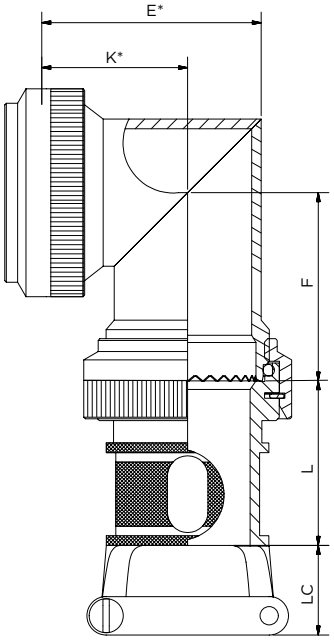

*REFER TO INTERFACE PAGE **CLICK HERE**

Example: **KMCC H 1 - 11 - 1 - C - S2 - HE**

- Series
- Connector interface*
- Angle
- Shell size
- Material
- Finish
- Slot Option
- Termination option

HE - Constant force spring, omit for supplied without spring

Table 1

SLOT OPTION	L ±0,5	M ±0,25	N ±0,25	MESH-TAPE PART NUMBER (ORDERED SEPARATELY- 25 M REEL)
S1	26,5	12,0	19,5	KM (6)
S2	34,5	20,0	27,5	KM (13)

Table 2

SHELL SIZE	ALL INTERFACES				
	D MAX	F MAX	ØG MIN	H MAX	LC MAX
08/09	14,5	21,5	6,6	13,2	14,0
10/11	15,0	23,0	9,3	16,7	14,0
10SL/12/12S/13	15,5	24,5	12,8	20,0	14,0
14/14S/15	16,0	28,5	14,7	22,7	14,0
16/16S/17	17,0	30,0	17,8	25,4	14,0
18/19	18,0	31,5	19,5	28,3	17,0
20/21	18,5	33,0	21,9	31,6	21,0
22/23	19,0	34,5	25,2	34,7	21,0
24/25	19,5	36,0	28,3	37,9	21,0

Table 3

INTERFACE	A	D	F	H	K	S	SM
DIMENSION Q	8,5	11,0	7,0	7,0	11,0	11,0	7,0

All dimensions in MM unless otherwise stated.

POLAMCO

76 Series

Heat Shrink Boot Backshell

- Low profile backshell for heat shrink boot

SPECIFICATIONS

- **Screen Termination:** None
- **Strain Relief & Cable Sealing:** Heat Shrink Boot Option
- **Additional Components Required:** Boot

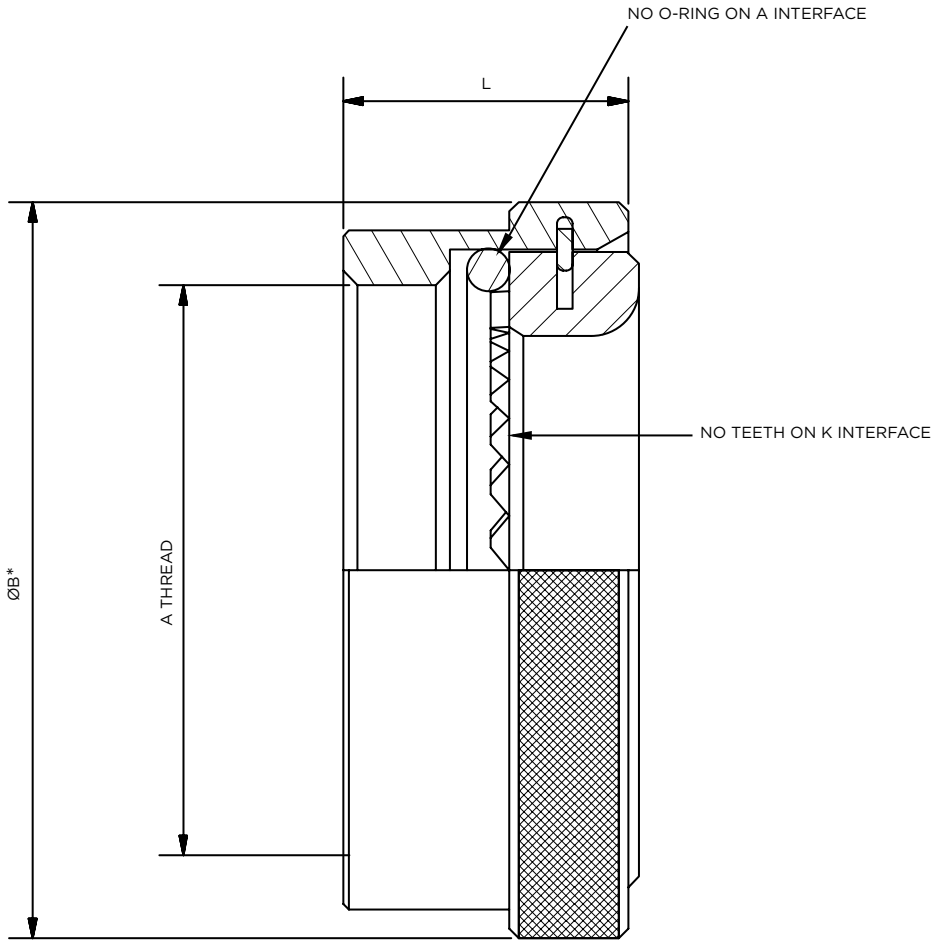

A-A

*REFER TO INTERFACE PAGE **CLICK HERE**

Example: 76 A 1 - 14 - 1 - ZB

- Series
- Connector interface*
- Angle
- Shell size
- Material
- Finish

Table 1 - Length

SHELL SIZE	INTERFACE							
	A	D	F	H	K	Q	S	SM
03	13,7	-	-	-	-	-	-	-
08/09	13,7	17,0	11,0	12,0	16,5	-	9,8	11,0
10/10SL/11	13,7	17,0	11,0	12,0	16,5	-	9,8	11,0
12/12S/13	13,7	17,0	11,0	12,0	16,5	12,5	9,8	11,0
14/14S/15	13,7	17,0	11,0	12,0	16,5	12,5	9,8	11,0
16/16S/17	13,7	17,0	11,0	12,0	16,5	12,5	9,8	11,0
18/19	13,7	17,0	11,0	12,0	16,5	12,5	9,8	11,0
20/21	13,7	17,0	11,0	12,0	16,5	12,5	9,8	11,0
22/23	13,7	17,0	11,0	12,0	16,5	12,5	9,8	11,0
24/25	13,7	17,0	11,0	12,0	16,5	12,5	9,8	11,0
28/29	13,7	-	-	-	-	12,5	-	-
32/33	13,7	-	-	-	-	12,5	-	-
36	13,7	-	-	-	-	12,5	-	-
40	13,7	-	-	-	-	12,5	-	-
44	13,7	-	-	-	-	-	-	-
48	13,7	-	-	-	-	-	-	-
61	13,7	-	-	-	-	-	-	-

All dimensions in MM unless otherwise stated.

PG Adaptor

Thread Adaptor

- To convert from military connector to PG threaded accessory

SPECIFICATIONS

- **Screen Termination:** n/a
- **Strain Relief & Cable Sealing:** n/a
- **Additional Components Required:** n/a

ANGLE 1

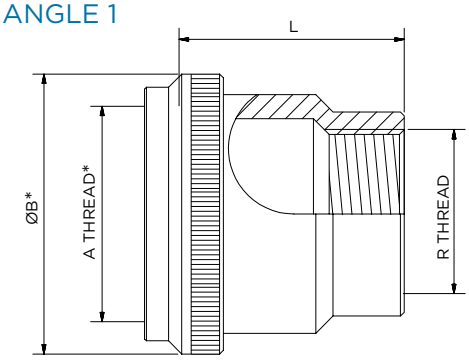

ANGLE 2

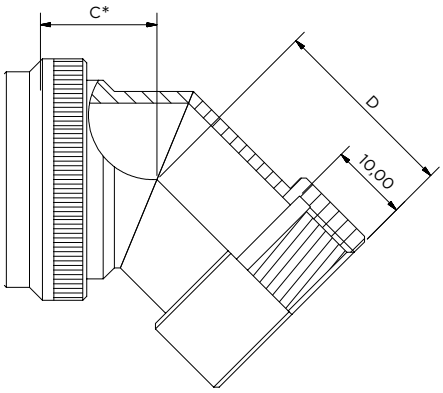

ANGLE 3

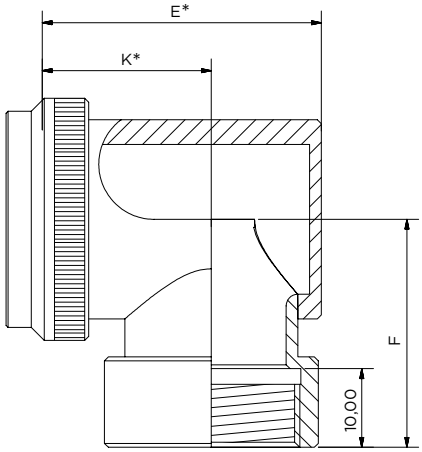

STAINLESS STEEL/BRONZE 90° STYLE

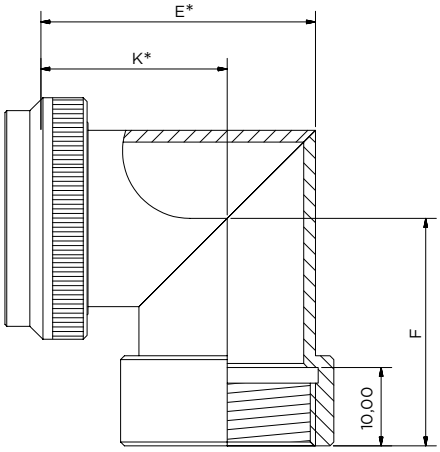

*REFER TO INTERFACE PAGE **CLICK HERE**

Example: **PGF H 1 - 17 - 16 - 1 - B - L25**

- **Series** — PGF
- **Connector interface*** — H
- **Angle** — 1
- **Shell size** — 17
- **PG Size** — 16
- **Material** — 1
- **Finish** — B
- **Length in MM** Straight Only (5mm Increments, L25 min) — L25

Table 1

PG SIZE	R THREAD
7	PG7
9	PG9
11	PG11
13.5	PG13.5
16	PG16
21	PG21
29	PG29
36	PG36
42	PG42
48	PG48

Table 2

SHELL SIZE	ALL INTERFACES		
	D MAX	F MAX	MAX PG THREAD* (ANGLES 2 & 3)
03	22,0	21,9	9
08/09	22,5	21,9	9
10/10SL/11	23,0	23,4	9
12/12S/13	23,5	25,4	11
14/14S/15	24,0	27,4	13,5
16/16S/17	25,0	29,4	16
18/19	26,0	30,9	21
20/21	26,5	31,4	21
22/23	27,0	32,9	29
24/25	27,5	34,9	29
28	28,0	37,9	29
32	29,0	41,4	29
36	30,0	44,4	36
40	31,0	47,9	36
44	32,0	51,4	36
48	33,0	54,4	42
61	34,0	36,4	29

*NOTE:
Contact TE for thread sizes outside this range

All dimensions in MM unless otherwise stated.

POLAMCO

DC Series

Backshell Extender

- Extends termination area
- Houses ancillary components such as fuses and service loops

SPECIFICATIONS

- **Screen Termination:** n/a
- **Strain Relief & Cable Sealing:** n/a
- **Additional Components Required:** n/a

ANGLE 1

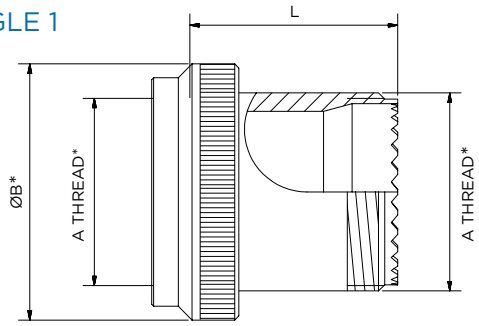

ANGLE 2

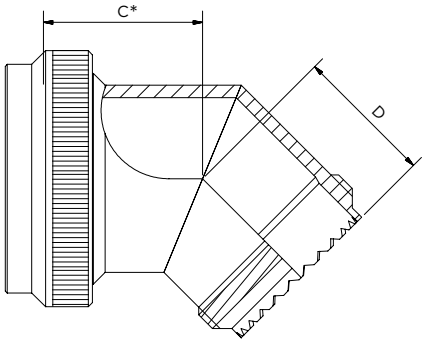

ANGLE 3

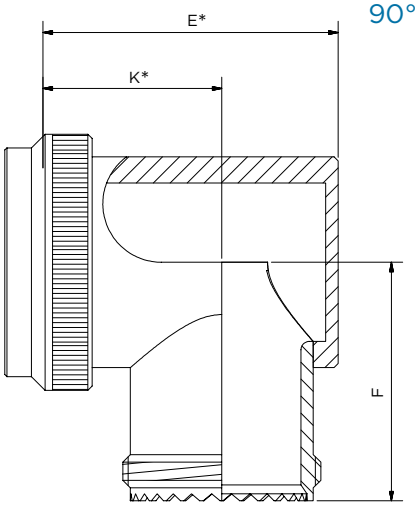

STAINLESS STEEL/BRONZE 90° STYLE

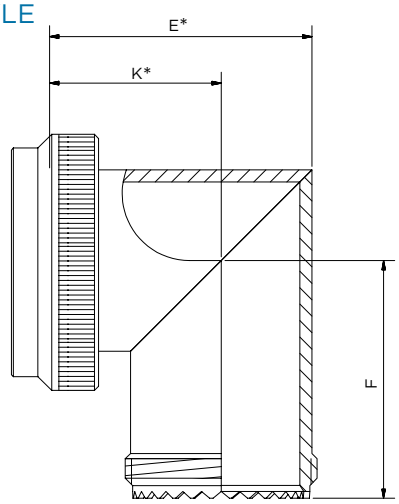

*REFER TO INTERFACE PAGE **CLICK HERE**

Example: **DC H 1 - 17 - 1 - B - L25**

- **Series** — DC
- **Connector interface*** — H
- **Angle** — 1
- **Shell size** — 17
- **Material** — 1
- **Finish** — B
- **Length in MM** — L25
  (5mm Increments, L20min - straight only)

Table 1 - Length

SHELL SIZE	All Interfaces	
	D MAX	F MAX
03	-	-
08/09	15,3	21,5
10/10SL/11	15,8	23,0
12/12S/13	16,8	24,5
14/14S/15	17,8	28,5
16/16S/17	18,3	30,0
18/19	18,8	31,5
20/21	19,3	33,0
22/23	18,8	34,5
24/25	20,5	36,0
28/29	22,2	36,2
32/33	23,9	39,6
36	25,6	44,1
40	27,3	50,0
44	29,0	43,0
48	30,7	44,7
61	20,8	34,8

All dimensions in MM unless otherwise stated.

Raychem

TXR Backshell

Tinel (Memory) Ring Backshell

- Low profile 360° screen termination by a heat shrink memory metal ring
- Sealing and strain relief of backshell by heat shrink boot

SPECIFICATIONS

- **Screen Termination:** Overall Screen
- **Strain Relief & Cable Sealing:** Heat Shrink Boot Option
- **Additional Components Required:** Boot

ANGLE 00

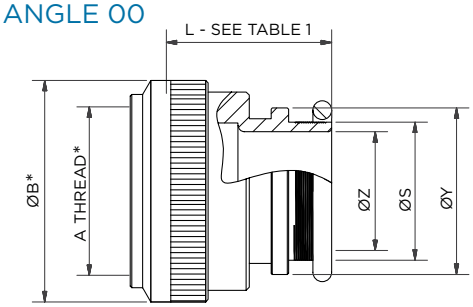

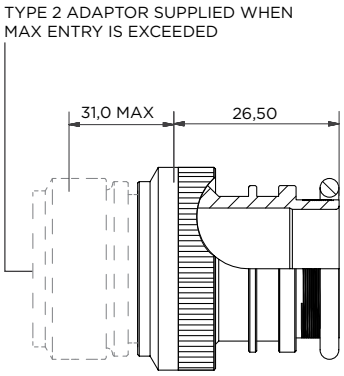

ANGLE 45

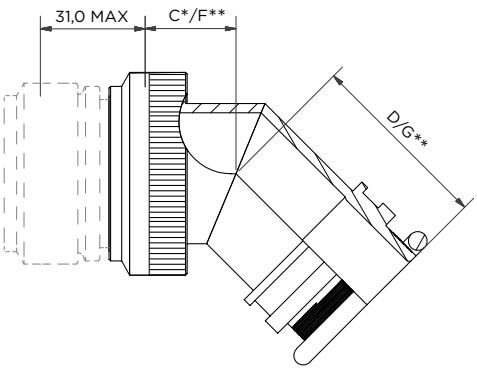

ANGLE 90

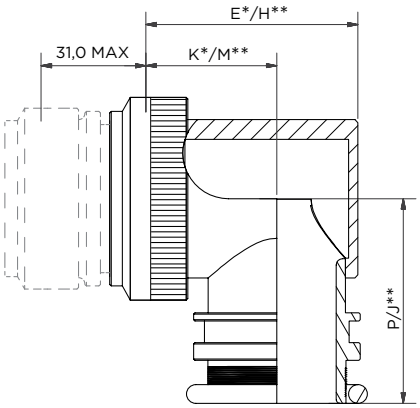

STAINLESS STEEL/BRONZE 90° STYLE

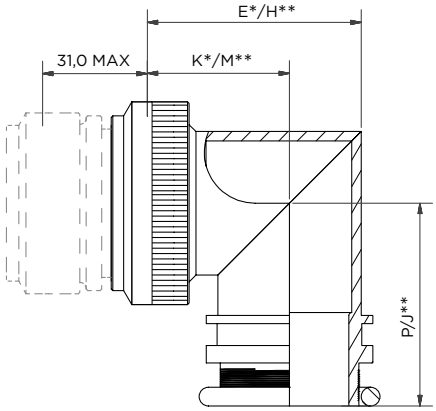

** F, G, H, M, & J APPLY WHEN ASSEMBLY IS TYPE 2

*REFER TO INTERFACE PAGE **CLICK HERE**

Example: **TXR54 A B 00 - 16 10 AI**

Adapter family*
Material
Finish
Angle (00 = straight; 45 = 45°; 90 = 90°)
Manufacturers prefix (connector code 18 only)
Order number
Entry size
Ring designator
AI - to suit single braid
BI - to suit double braid

Table 1 - Max Length & Max Entry

SHELL SIZE	INTERFACE															
	40	MAX ENTRY	54	MAX ENTRY	41	MAX ENTRY	21	MAX ENTRY	76	MAX ENTRY	78	MAX ENTRY	79	MAX ENTRY	30	MAX ENTRY
03	-	-	26,0	04	-	-	-	-	-	-	-	-	-	-	-	-
08	27,0	04	26,0	04	27,3	04	30,9	04	36,9	04	-	-	27,3	05	-	-
10/11	27,0	07	26,0	06	27,3	07	30,9	06	36,9	06	-	-	27,3	07	30,5	05
12/13	27,0	08	26,0	08	27,3	08	30,9	08	36,9	08	32,0	05	27,3	08	30,5	08
14/15	27,0	10	26,0	08	27,3	10	30,9	10	36,9	10	32,0	07	27,3	10	30,5	10
16/17	27,0	12	26,0	10	27,3	12	30,9	12	36,9	12	36,8	08	27,3	12	30,5	12
18/19	27,0	14	26,0	12	27,3	14	30,9	12	36,9	14	36,8	10	27,3	14	30,5	14
20	27,0	16	26,0	14	27,3	16	30,9	14	36,9	16	38,9	12	27,3	16	-	-
22/23	27,0	18	26,0	16	27,3	18	30,9	16	36,9	18	38,9	14	27,3	18	30,5	16
24/25	27,0	20	26,0	18	27,3	20	30,9	18	36,9	18	41,2	16	27,3	20	30,5	18
28/29	-	-	26,0	22	-	-	-	-	-	-	41,2	18	-	-	30,5	22
32/33	-	-	26,0	24	-	-	-	-	-	-	44,7	22	-	-	30,5	24
36	-	-	26,0	28	-	-	-	-	-	-	44,7	24	-	-	-	-
40	-	-	26,0	28	-	-	-	-	-	-	-	-	-	-	-	-
44	-	-	26,0	28	-	-	-	-	-	-	-	-	-	-	-	-
48	-	-	26,0	28	-	-	-	-	-	-	-	-	-	-	-	-
61	-	-	26,0	18	-	-	-	-	-	-	-	-	-	-	-	-

Table 2

ENTRY SIZE	ØZ MIN	ØS	ØY ± 0,3	F MAX	G MAX	H MAX	M MAX	J MAX
04	6,35	9,49	14,00	NA	NA	NA	NA	NA
05	7,92	11,06	15,50	13,0	28,0	24,8	17,7	28,7
06	9,53	12,66	17,10	13,0	28,0	24,8	17,7	28,7
07	11,10	14,21	18,70	13,0	28,0	24,8	17,7	28,7
08	12,70	15,81	20,30	13,6	28,5	28,8	19,9	30,2
10	15,88	18,96	23,50	14,0	29,5	31,6	21,5	31,7
12	19,05	22,14	26,70	15,0	30,2	34,7	23,3	33,4
14	22,23	25,30	29,80	16,0	31,0	39,0	25,8	35,0
16	25,40	28,48	33,00	16,6	31,4	41,2	26,6	36,6
18	28,58	31,65	36,20	17,0	31,6	44,2	28,1	38,1
20	31,75	34,83	39,40	17,5	32,6	46,9	29,6	39,6
22	34,93	37,98	42,50	19,0	35,8	55,0	31,5	42,5
24	38,10	41,15	45,70	22,4	38,6	58,5	33,5	46,5

Table 3

ORDER NUMBER								D MAX	P MAX
54	41	21	76	78	79	40	30		
03								27,5	26,4
08	08	08	08		08	08		27,3	26,9
10	10	10	10	12	10	10	11	28,0	38,7
12	12	12	12		12	12	13	28,5	30,2
14	14	14	14	14	14	14	15	29,5	31,7
16	16	16	16	16	16	16	17	30,2	33,4
18	18	18	18	18	18	18	19	31,5	35,0
20	20	20	20	20	20	20		31,4	36,6
22	22	22	22	22	22	22	23	31,6	38,1
24	24	24	24	24	24	24	25	32,7	39,6
28				28			29	35,8	45,8
32				32			33	38,6	48,3
36				36				31,2	48,9
40								32,5	51,9
44								34,2	55,1
48								35,4	58,2
61								27,1	39,2

All dimensions in MM unless otherwise stated.

Raychem

HexaShield Backshell

360° Screening Backshell

- Strain relief on each individual cable
- Compact size not exceeding outer diameter of connector
- No degradation of shielding performance

SPECIFICATIONS

- **Screen Termination:** 360° Screening
- **Strain Relief & Cable Sealing:** n/a
- **Additional Components Required:** See note 4, p47

ANGLE 00

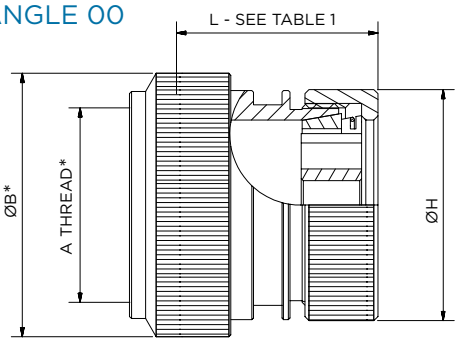

REAR VIEW

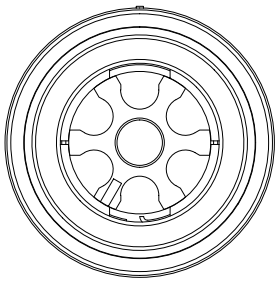

ANGLE 45

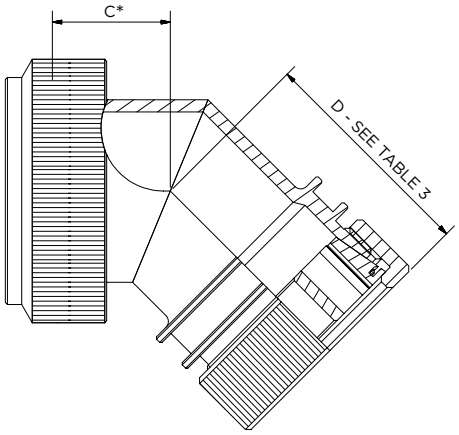

ANGLE 90

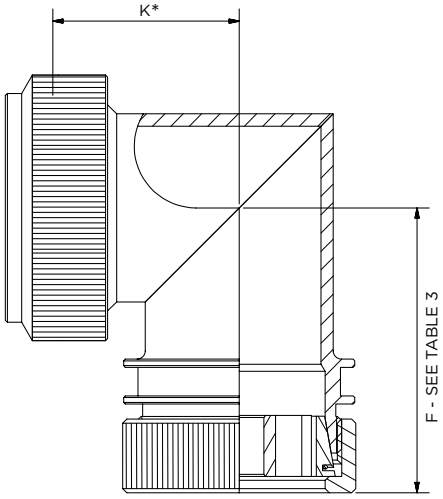

*REFER TO INTERFACE PAGE **CLICK HERE**

Example: **HEX40 - K - C - 00 - 21 - A9 - 1 - DS**

Connector code number:*
HEX40 = MIL-C-38999 Series III and IV
Material
Finish
C - Electroless nickel to MIL-C-26074
B - Cadmium olive drab over electroless nickel to QQ-P416
Body Style
(00 = straight; 45 = 45°; 90 = 90°)
Order number
Ferrule quantity code
Back end option
1 = Plain clamping nut
DS = Drilled star (optional, see note 2)

Table 1 - Length

SHELL SIZE	ORDER NUMBER			
	54	41	40	21
08/09	25,0	25,0	25,0	36,0
10/11	25,0	25,0	25,0	36,0
12/13	25,0	25,0	25,0	36,0
14/15	25,0	25,0	25,0	36,0
16/17	25,0	25,0	25,0	36,0
18/19	25,0	25,0	25,0	36,0
20/21	25,0	25,0	25,0	36,0
22/23	25,0	25,0	25,0	36,0
24/25	25,0	25,0	25,0	36,0

Table 2

ITEM	DESCRIPTION	MATERIAL CODE		
		A	K	S
1	BODY ASSEMBLY	ALUMINIUM ALLOY	STAINLESS STEEL	**NUT** - STAINLESS STEEL **BODY** - ALUMINIUM ALLOY
2	CLAMPING NUT - PLAIN	ALUMINIUM ALLOY	STAINLESS STEEL	ALUMINIUM ALLOY
3	CONIC RING	ALUMINIUM ALLOY	STAINLESS STEEL	ALUMINIUM ALLOY
4	STAR	ALUMINIUM ALLOY	STAINLESS STEEL	ALUMINIUM ALLOY

Table 3

SHELL SIZE	ORDER NUMBER								
	54	41	40	21	ØH MAX	D MAX	F MAX	STANDARD	OPTIONAL
08/09	09	09	09	**08**	**17,5**	**25,5**	**29,0**	**1**	**-**
10/11	11	11	11	**10**	**21,5**	**26,0**	**30,5**	**2**	**-**
12/13	13	13	13	**12**	**22,5**	**26,5**	**32,0**	**3**	**-**
14/15	15	15	15	**14**	**25,5**	**27,5**	**33,5**	**5**	**-**
16/17	17	17	17	**16**	**28,5**	**28,0**	**35,0**	**6**	**7**
18/19	19	19	19	**18**	**31,5**	**28,5**	**36,5**	**7**	**-**
20/21	21	21	21	**20**	**35,0**	**29,0**	**38,5**	**9**	**11**
22/23	23	23	23	**22**	**38,0**	**30,0**	**40,0**	**10**	**13**
24/25	25	25	25	**24**	**41,0**	**31,0**	**41,5**	**12**	**17**

NOTES:
1. Star is not supplied with HexaShield order number 09/08
2. The DS option is for a drilled star which is available on sizes 14 to 25 only, this option is to allow unshielded wires to pass through the assembly
3. If optional ferrule quantity is selected then 2 stars will be supplied - an outer "split" star and an inner solid star
4. Use in conjunction with the ferrules HET-A-0xx, which are purchased separately

All dimensions in MM unless otherwise stated.

Cobra Head

Backshell Modification

- Low profile backshell form
- Designed for use with heat shrink boot
- Modular design for ease of cable assembly
- Can be used on many standard range backshells (see opposite page for details)

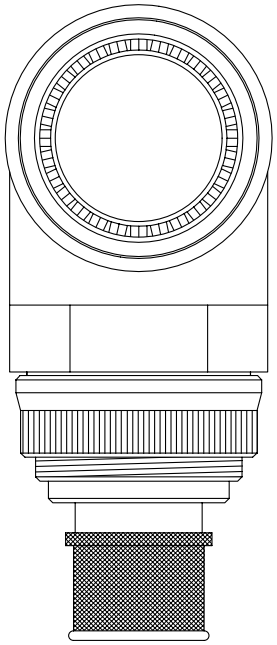

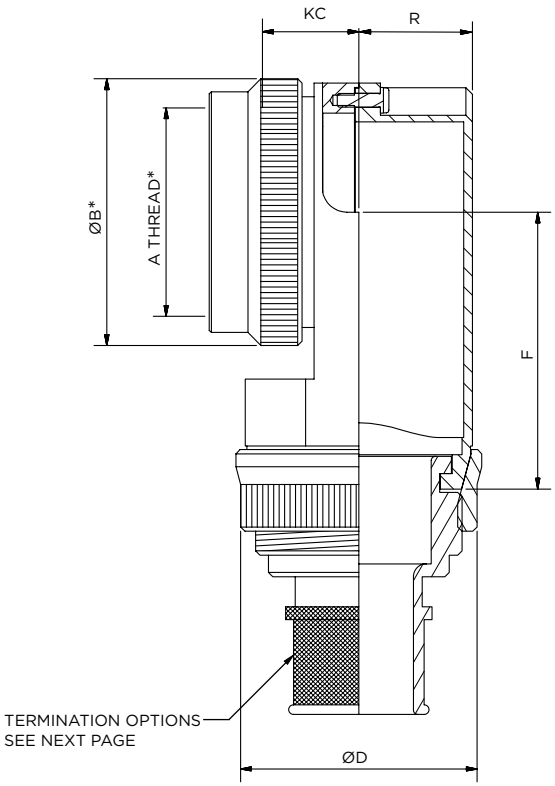

SHELL SIZE	All Interfaces			
	D MAX	F MAX	R MAX	MAX ENTRY
08/09	18,7	22,5	8,7	04
10/11	21,7	26,6	10,0	06
12/13	24,7	26,6	11,0	08
14/15	24,7	30,4	11,6	08
16/17	28,7	32,7	13,6	10
18/19	28,7	35,4	13,6	10
20/21	28,7	36,4	13,6	10
22/23	31,7	38,9	15,1	12
24/25	31,7	40,4	15,1	12

INTERFACE / SHELL SIZE	A	D	F	H
	KC	KC	KC	KC
08/09	10,3	7,9	8,7	8,7
10/11	10,3	7,9	8,7	8,7
12/13	10,3	7,9	8,7	8,7
14/15	11,8	9,4	10,2	10,2
16/17	12,8	10,4	11,2	11,2
18/19	12,8	10,4	11,2	11,2
20/21	12,8	10,4	11,2	11,2
22/23	14,3	11,9	12,7	12,7
24/25	14,3	11,9	12,7	12,7

Please consult TE for interfaces that are not listed

*REFER TO INTERFACE PAGE **CLICK HERE**

60 Series

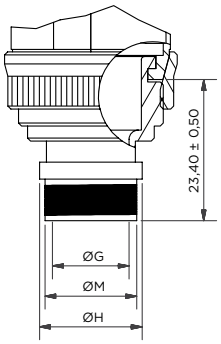

ENTRY SIZE	ØG MIN	ØM MAX	ØH MAX
04	6,4	9,5	14,3
05	7,9	11,1	15,8
06	9,5	12,7	17,4
07	11,1	14,3	19,0
08	12,7	15,9	20,6
10	15,9	19,1	23,8
12	19,1	22,2	27,0

70 Series

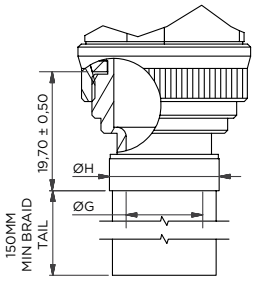

ENTRY SIZE	ØG MIN	ØH MAX
03	4,77	13,1
04	6,35	13,1
05	7,92	13,1
06	9,52	17,9
07	11,10	17,9
08	12,70	17,9
09	14,27	17,9
10	15,88	24,2
11	17,47	24,2
12	19,05	24,2

88 Series

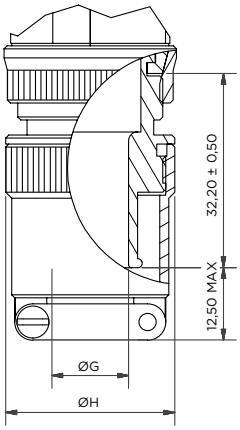

ENTRY SIZE	ØG MIN	ØH MAX
03	4,77	20,2
04	6,35	21,8
05	7,92	23,4
06	9,52	25,0
07	11,10	26,5
08	12,70	28,0
09	14,27	29,7
10	15,88	31,3
11	17,47	33,0
12	19,05	34,6

77 Series

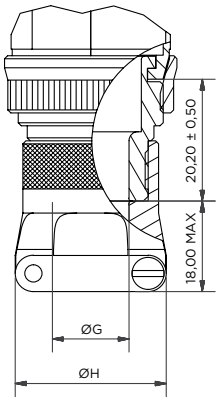

ENTRY SIZE	ØG MIN	ØH MAX
03	4,7	17,1
04	6,3	19,1
05	7,9	20,7
06	9,5	22,3
07	11,1	23,8
08	12,7	25,3
09	14,2	27,0
10	15,8	28,6
11	17,4	30,3
12	19,0	31,8

34 Series

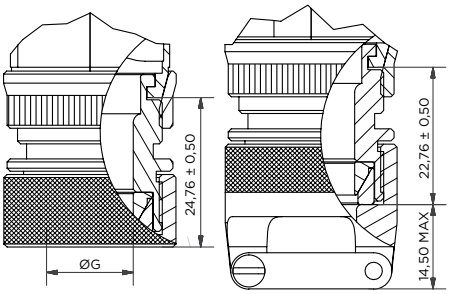

ENTRY SIZE	ØG MIN
03	4,77
04	6,35
05	7,92
06	9,52
07	11,10
08	12,70
09	14,27
10	15,88
11	17,47
12	19,05

BT/91 Series

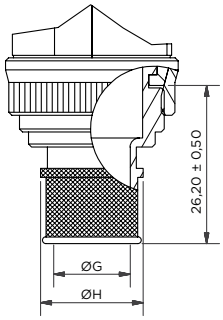

ENTRY SIZE	ØG MIN	ØH MAX
03	4,77	9,4
04	6,35	11,0
05	7,92	12,6
06	9,52	14,0
07	11,10	15,7
08	12,70	17,0
09	14,27	19,9
10	15,88	20,4
11	17,47	22,1
12	19,05	23,6

95 Series

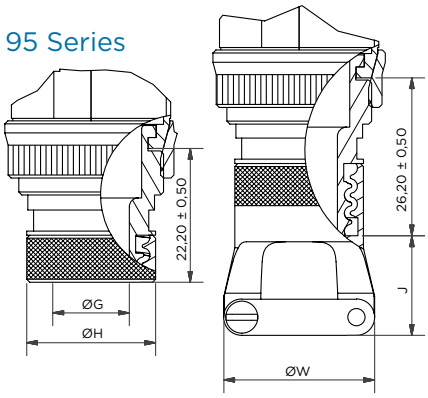

ENTRY SIZE	ØG MIN	ØH MAX	ØW MAX	J
03	4,77	15,2	17,3	13,7
04	6,35	15,2	18,9	13,7
05	7,92	16,8	20,5	13,7
06	9,52	18,4	22,1	13,7
07	11,10	20,0	23,6	13,7
08	12,70	21,6	25,1	16,7
09	14,27	23,2	26,8	16,7
10	15,88	24,8	28,4	16,7
11	17,47	26,4	30,1	19,7
12	19,05	27,9	31,6	19,7

All dimensions in MM unless otherwise stated.

ACCESSORY

M85049/128 Band Straps

Backshell Accessory

- Meets AS85049 NAVAIR standards
- Self-coupling locking nut provides an improved mechanical protection against loosening under vibration
- Corrosion resistant stainless steel
- Band straps available flat or precoiled

TWO-STEP BAND

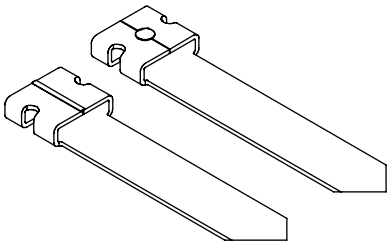

M85049/128-1 FLAT
M85049/128-2 PRE-COILED

STANDARD BAND

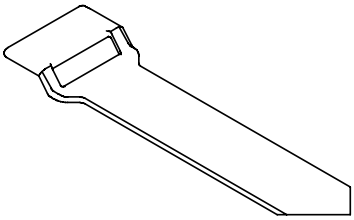

M85049/128-3 FLAT
M85049/128-4 PRE-COILED

MICROBAND

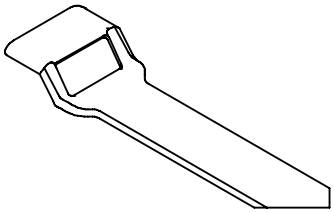

M85049/128-7 FLAT
M85049/128-8 PRE-COILED

FLAT BAND - CONFIGURATION 1, 3, 7

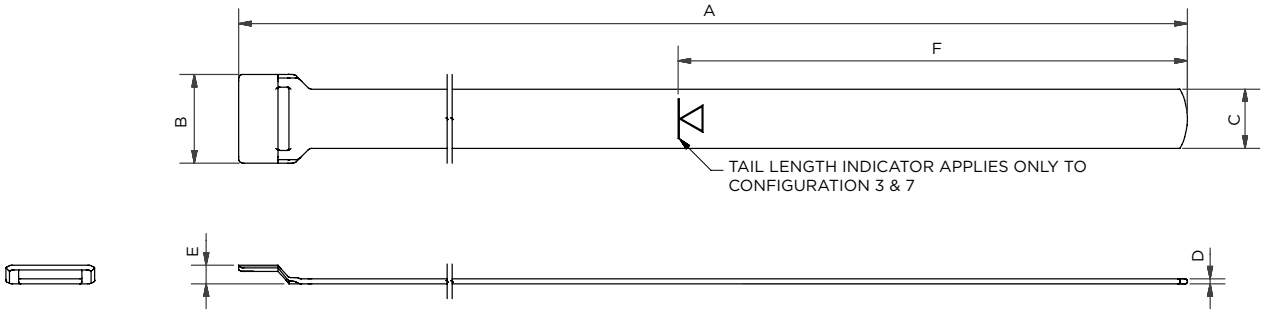

Example: **M85049/128 - 1**

Series
Configuration

PRE-COILED BAND CONFIGURATION 2

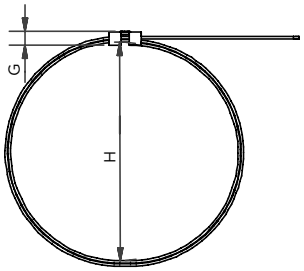

PRE-COILED BAND CONFIGURATION 4, 8

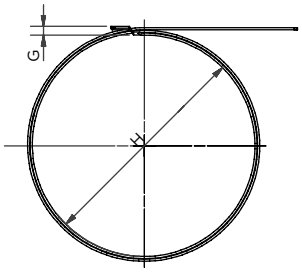

CONFIGURATION	A ± ,06	B ± ,031	C ± ,010	D ± ,003	E ± ,015	F REF	G MAX	H REF	SUFFIX	TOOL REQUIRED
1	358,90	8,33	6,22	0,48	2,54	-	-	-	-	M81036/2-01
2	-	-	-	-	-	-	3,56	44,5	-S2	M81036/2-01
3	361,95	8,89	6,22	0,48	1,88	51,59	-	-	-	M81036/1-01
4	-	-	-	-	-	-	3,81	44,5	-SB	M81036/1-01
7	206,25	4,95	2,92	0,38	1,35	51,59	-	-	-	M81036/1-02
8	-	-	-	-	-	-	1,85	21,8	-MB	M81036/1-02

INTERFACE DIMENSION TABLE ON REVERSE OF THIS PAGE

Interface Dimension Table

Interface Code

POLAMCO	A	F	-	K	D	SM	Q	-	S	H	-	Z	A THREAD	ØB MAX	C MAX	K MAX	E MAX
Raychem	54	-	41	21	76	47	-	78	79	-	40	30					
		08/09	08	08	08	08			08				7/16-28 UNEF	19,3	16,9	21,8	27,5
										09	08		M12 x 1.0	19,0	14,6	18,5	25,7
	08												1/2 - 20 UNF	16,0	17,1	18,5	24,7
	03	10/11	10	10	10	10			10				9/16-24 UNEF	22,0	17,7	24,6	31,0
										11	10		M15 x 1.0	22,0	15,2	19,6	26,7
	10						10SL	12					5/8-24 UNEF	22,0	17,0	19,3	26,7
		12/13	12	12	12	12			12				11/16-24 UNEF	25,5	18,1	25,0	34,0
										13	12		M18 x 1.0	25,5	16,0	21,1	31,2
	12						14S	14				11	3/4 - 20 UNEF	26,5	20,2	22,9	31,7
		14/15	14	14	14	14			14				13/16-20 UNEF	30,5	19,0	26,5	37,0
										15	14		M22 x 1.0	30,5	16,2	25,0	37,2
	14						16/16S	16				13	7/8-20 UNEF	30,0	24,4	26,0	36,2
		16/17	16	16	16	16			16				15/16-20 UNEF	33,5	19,7	28,2	40,4
										17	16		M25x1.0	33,5	17,0	27,2	40,2
	16						18	18				15	1-20 UNEF	33,0	25,1	27,5	39,2
	18	18/19	18	18	18	18			18				1 1/16-18 UNEF	37,0	20,1	29,8	43,6
										19	18		M28 x 1.0	37,0	17,5	27,5	44,7
							20	20				17	1 1/8-18 UNEF	35,5	25,6	28,5	42,2
	20	20/21	20	20	20	20			20				1 3/16-18 UNEF	38,5	20,9	31,4	46,8
										21	20		M31 x 1.0	38,5	18,5	31,0	49,2
							22	22				19	1 1/4-18 UNEF	38,7	26,4	30,0	45,2
	22	22/23	22	22	22	22			22				1 5/16-18 UNEF	42,0	21,3	37,1	49,8
										23	22		M34x1.0	42,0	19,1	32,0	51,7
							24	24					1 3/8-18 UNEF	41,3	27,6	31,5	48,2
	24	24/25	24	24	24	24			24			23	1 7/16-18 UNEF	46,5	22,6	34,4	52,8
										25	24		M37 x 1.0	46,5	19,3	30,5	53,2
	61												1 1/2-18 UNEF	42,0	22,3	28,5	48,0
												25	1 9/16- 18UNEF	47,2	23,6	32,0	51,5
							28	28					1 5/8-18 UNEF	47,8	29,3	36,0	55,3
	28												1 3/4-18 UNS	50,0	23,5	35,7	54,4
							32	32				29	1 7/8-16 UN	55,2	30,2	37,5	60,3
	32												2-18 UNS	56,3	25,2	36,9	62,5
							36	36				33	2 1/16-16 UNS	62,2	31,7	39,5	64,2
	36												2 1/4-16 UN	62,7	26,4	38,5	67,4
	40												2 1/2-16 UN	69,0	28,8	41,5	73,4
	44												2 3/4-16 UN	75,4	30,3	44,6	79,7
	48												3-16 UN	81,7	31,5	47,7	86,0

Shell Size

For AD modification add 4,0 to ØB, C, K and E dimensions

All dimensions in MM unless otherwise stated.

Glossary of Terms

Anti-decoupling
Anti-decoupling backshells incorporate a ratchet in the nut to help reduce the possibility of the backshell decoupling from the connector due to extreme vibration and shock.

Arctic grip
A deep square-form grip, alternative to a knurled grip, particularly on protective covers.

Backshell
Any accessory fitted to the rear thread of a connector, providing strain relief, screen termination and/or cable sealing.

Blanking Cover
Helps to provide environmental protection and EMC shielding to circuitry or shorting loops at the rear of a connector that is to be used as a stand-alone device.

Cobra Head
Low profile split 90° adaptor.

Conduit
Flexible corrugated tubing that provides environmental protection for wiring. Can be used in conjunction with screenbraid and conduit adaptor backshells to provide a fully screened and sealed system.

Connector
Device for electrically connecting wires to each other or to electrical equipment.

Direct-coupling
Direct-coupling backshells do not have a distinct nut, i.e. the entire backshell rotates when the backshell is screwed into place.

Dummy Receptacle
Provides stowage, environmental protection, and EMC shielding for an unmated plug.

EMC
Electromagnetic Compatibility assures the avoidance of interference effects resulting from the unintentional generation, propagation and reception of electromagnetic energy. This can be achieved by properly grounded shielding (screening) or by electronically filtering signals (Filter Connector).

Entry size
Two digits describe the diameter of the hole through which the cable enters into the backshell. Check specific series for details – note that some series such as boot adaptors (97 series) and cable clamps (96 series) do not require the entry size to be stated.

Follower
Refers to the main body of a spin-coupling backshell.

Heat shrink boot
Molded sleeve that joins the cable jacket to a suitable backshell, for purposes of strain-relief and environmental protection. Heat shrink boots shrink to fit and are installed by use of a specialised hot air gun. Adhesive-lined boots and a variety of materials are available.

Heat shrink kit
Backshell with pre-installed heat-shrink boot and optional (internal) overall screen. Enables easy installation whereby boot and 360° screen termination are achieved in one operation by use of hot air gun.

Individual screen
EMC shield (e.g. screenbraid) encompassing an individual wire in a bundle.

Lacing Tape
Lacing cord used as a binding medium to indicate an EMC classification of an open wiring harness.

Overall screen
EMC shield (e.g. screenbraid) encompassing entire wire bundle.

Protective Cover
Provides environmental protection and EMC shielding on the front (mating end) of an unmated connector.

RoHS
The RoHS Directive bans the placing on the EU market of new electrical and electronic equipment containing more than agreed levels of lead, cadmium, mercury, hexavalent chromium, polybrominated biphenyl (PBB) and polybrominated diphenyl ether (PBDE) flame retardants.

Screenbraid
Flexible EMC shield in expanding sleeve form for covering cable.

Shell size
Two numerical digits that state the size of the connector.

Shield
See EMC

Spin-coupling
Spin-coupling backshells have a coupling nut that rotates freely on the backshell body.

Strain relief
Any method of relieving the strain on the individual wires, should the cable be put under tension. Common methods are cable clamps, heatshrink boots, tie posts.

LET'S CONNECT

We make it easy to connect with our experts and are ready to provide all the support you need. Just call your local support number or visit www.te.com/industrial to chat with a Product Information Specialist.

Technical Support

te.com/support-center

North America	+1 800 522 6752	Asia Pacific	+86 400 820 6015
North America (Toll)	+1 717 986 7777	Japan	044 844 8180
EMEA/South Africa	+800 0440 5100	Australia	+61 2 9554 2695
EMEA (Toll)	+31 73 624 6999	New Zealand	+64 (0) 9 634 4580
India (Toll-Free)	+800 440 5100		

te.com/polamco

TE, TE connectivity, TE Connectivity (logo), POLAMCO, Raychem are trademarks. All other logos, products and/or company names referred to herein might be trademarks of their respective owners.

The information given herein, including drawings, illustrations and schematics which are intended for illustration purposes only, is believed to be reliable. However, TE Connectivity makes no warranties as to its accuracy or completeness and disclaims any liability in connection with its use. TE Connectivity's obligations shall only be as set forth in TE Connectivity's Standard Terms and Conditions of Sale for this product and in no case will TE Connectivity be liable for any incidental, indirect or consequential damages arising out of the sale, resale, use or misuse of the product. Users of TE Connectivity products should make their own evaluation to determine the suitability of each such product for the specific application.

© 2017 TE Connectivity. All Rights Reserved.

1-1773922-5 05/17 Original