TRIDONIC

Module LLE 24mm 1250lm HV ADV5

Modules LLE advanced

LLE 24x70mm 325lm HV ADV5

LLE 24x140mm 650lm HV ADV5

LLE 24x280mm 1250lm HV ADV5

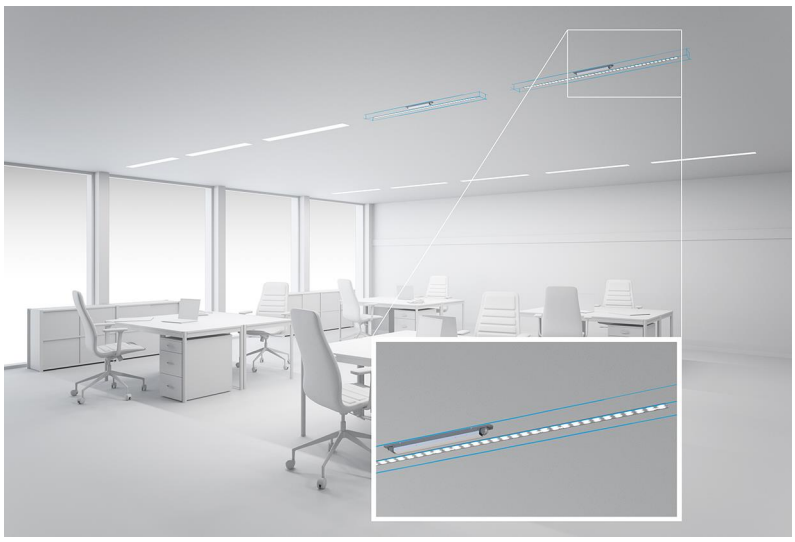

Product description

_ Ideal for linear and panel lights
_ 2 terminals for serial wiring
_ Perfectly uniform light, even if several LED modules are used together in a line
_ Push terminals for quick and simple wiring of LED module to LED module
_ Broad portfolio from extruded lenses and covers available
_ HE ... High Efficiency, NM ... Nominal Mode, HO ... High Output
_ Min. order quantity LLE 24x70mm QTY4: 36 pcs. The LLE 24x70mm QTY4 module contains 4 single 24x70mm modules which have to be separated
_ Long lifetime up to 72,000 hours
_ 5 years guarantee (conditions at https://www.tridonic.com/en/int/services/manufacturer-guarantee-conditions)

Optical properties

_ Colour temperatures 2,700, 3,000, 4,000, 5,000 and 6,500 K
_ Useful luminous flux 2,507 lm at Irated and tp = 25 °C
_ Efficacy of the LED module 190 lm/W at Irated and tp = 25 °C
_ High colour rendering index CRI > 80
_ High colour consistency (MacAdam 3) ①
_ Small luminous flux tolerances

Mechanical properties

_ Module dimension 24 x 70 mm, 24 x 140 mm, 24 x 280 mm and 24 x 560 mm (ZHAGA compliant)
_ Simple installation via clips or screws

System solution

_ Combine Tridonic's LED modules and dimmable drivers to achieve an outstanding system efficacy (configuration possible via https://setbuilder.tridonic.com/)

① Integral measurement over the complete module.

Website

http://www.tridonic.com/89603203

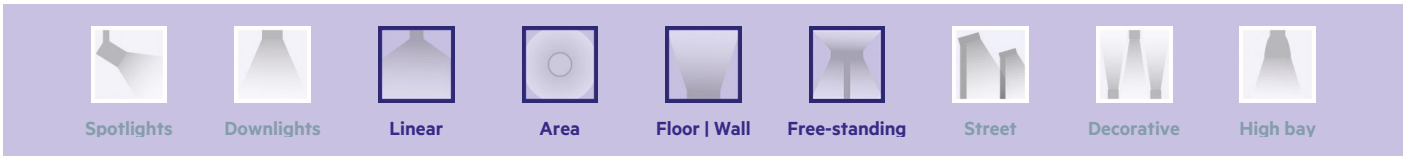

Module LLE 24mm 1250lm HV ADV5

Modules LLE advanced

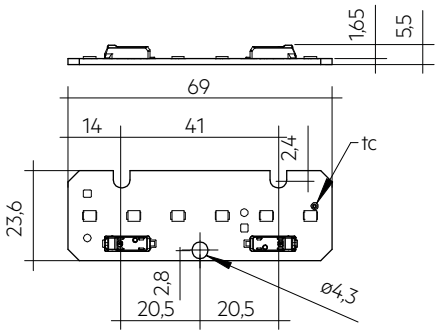

LLE 24x70mm 325lm HV ADV5

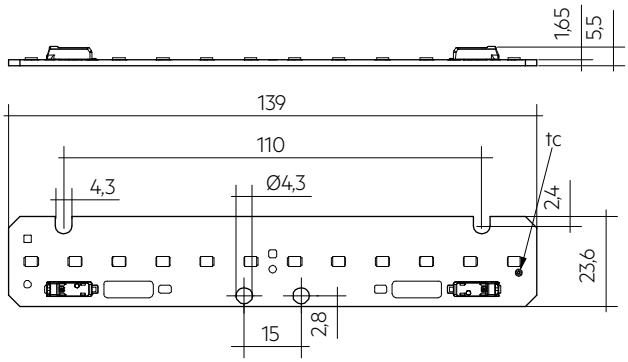

LLE 24x140mm 650lm HV ADV5

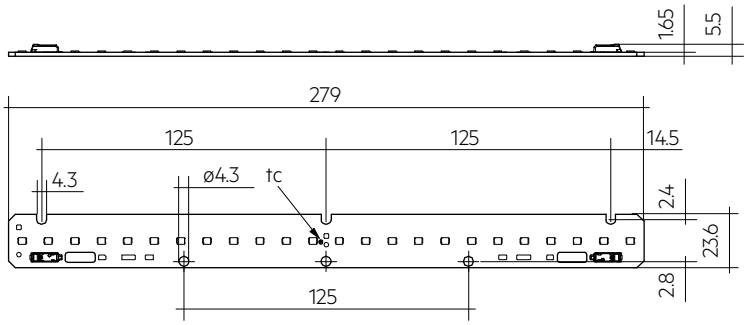

LLE 24x280mm 1250lm HV ADV5

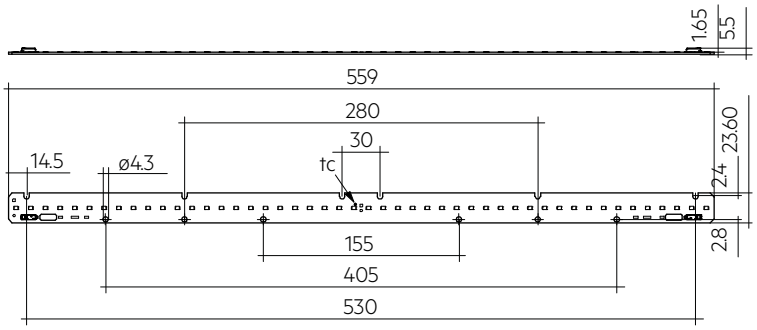

LLE 24x560mm 2400lm HV ADV5

Ordering data

Type	Article number	Colour temperature	Packaging, carton	Weight per pc.
LLE 24x70mm 325lm 830 HV ADV5 QTY4	**89603203**	3,000 K	108 pc(s).	0.022 kg
LLE 24x70mm 325lm 840 HV ADV5 QTY4	**89603204**	4,000 K	108 pc(s).	0.022 kg
LLE 24x70mm 325lm 850 HV ADV5 QTY4	**28003379**	5,000 K	108 pc(s).	0.022 kg
LLE 24x70mm 325lm 865 HV ADV5 QTY4	**28002946**	6,500 K	108 pc(s).	0.022 kg
LLE 24x140mm 650lm 830 HV ADV5	**89603206**	3,000 K	108 pc(s).	0.011 kg
LLE 24x140mm 650lm 835 HV ADV5	**28003404**	3,500 K	108 pc(s).	0.011 kg
LLE 24x140mm 650lm 840 HV ADV5	**89603207**	4,000 K	108 pc(s).	0.011 kg
LLE 24x280mm 1250lm 827 HV ADV5	**89603210**	2,700 K	108 pc(s).	0.023 kg
LLE 24x280mm 1250lm 830 HV ADV5	**89603211**	3,000 K	108 pc(s).	0.023 kg
LLE 24x280mm 1250lm 835 HV ADV5	**28003405**	3,500 K	108 pc(s).	0.023 kg
LLE 24x280mm 1250lm 840 HV ADV5	**89603212**	4,000 K	108 pc(s).	0.023 kg
LLE 24x280mm 1250lm 850 HV ADV5	**89603213**	5,000 K	108 pc(s).	0.023 kg
LLE 24x280mm 1250lm 865 HV ADV5	**89603214**	6,500 K	108 pc(s).	0.023 kg
LLE 24x560mm 2400lm 827 HV ADV5	**89603215**	2,700 K	108 pc(s).	0.040 kg
LLE 24x560mm 2400lm 830 HV ADV5	**89603216**	3,000 K	108 pc(s).	0.040 kg
LLE 24x560mm 2400lm 835 HV ADV5	**28003262**	3,500 K	108 pc(s).	0.040 kg
LLE 24x560mm 2400lm 840 HV ADV5	**89603217**	4,000 K	108 pc(s).	0.040 kg
LLE 24x560mm 2400lm 850 HV ADV5	**89603218**	5,000 K	108 pc(s).	0.040 kg
LLE 24x560mm 2400lm 865 HV ADV5	**89603219**	6,500 K	108 pc(s).	0.040 kg

Technical data

Beam characteristic	120°
Ambient temperature ta	-40 … +65 °C
tp rated	50 °C
tc	85 °C
Irated	300 mA
Imax	540 mA
Max. permissible LF current ripple	595 mA
Max. permissible peak current	900 mA / max. 10 ms
Max. working voltage for insulation ②	440 V
Insulation test voltage	1.88 kV
CTI of the printed circuit board	≥ 600
Colour tolerance	3 SDCM
ESD classification	Severity level 4
Risk group (IEC 62471) at ≤ 470 mA	RG0
Risk group (IEC 62471) at Imax	RG1
Classification acc. to IEC 62031	Built-in
Type of protection	IP00
Lumen maintenance L70B50	72,000 h
Guarantee (conditions at www.tridonic.com)	5 Year(s)

Approval marks

RoHS

Standards

IEC 62031, IEC 62471, IEC 61000-4-2, IEC 62778, IEC 61547, UL 8750

Specific technical data

Type	Article number	Photometric code	Useful luminous flux at tp = 25 °C[3]	Expected luminous flux at tp rated[4]	Typ. forward current	Min. forward voltage at tp rated[5]	Max. forward voltage at tp = 25 °C[5]	Power consumption Pon at tp = 25 °C[6]	Efficacy of the module at tp = 25 °C	Expected efficacy of the module at tp rated	Colour rendering index CRI
Operating mode HE at 200 mA											
LLE 24x70mm 325lm 830 HV ADV5 QTY4	**89603203**	830/359	–	207 lm	200 mA	5.2 V	5.6 V	–	–	184 lm/W	> >80
LLE 24x70mm 325lm 840 HV ADV5 QTY4	**89603204**	840/359	–	212 lm	200 mA	5.2 V	5.6 V	–	–	192 lm/W	> >80
LLE 24x70mm 325lm 850 HV ADV5 QTY4	**28003379**	850/359	–	211 lm	200 mA	5.2 V	5.6 V	–	–	189 lm/W	> >80
LLE 24x70mm 325lm 865 HV ADV5 QTY4	**28002946**	865/359	–	204 lm	200 mA	5.2 V	5.6 V	–	–	182 lm/W	> >80
LLE 24x140mm 650lm 830 HV ADV5	**89603206**	830/359	–	404 lm	200 mA	10.3 V	11.2 V	–	–	189 lm/W	> >80
LLE 24x140mm 650lm 835 HV ADV5	**28003404**	835/359	–	421 lm	200 mA	10.3 V	11.2 V	–	–	195 lm/W	> >80
LLE 24x140mm 650lm 840 HV ADV5	**89603207**	830/359	–	423 lm	200 mA	10.3 V	11.2 V	–	–	198 lm/W	> >80
LLE 24x280mm 1250lm 827 HV ADV5	**89603210**	827/359	–	788 lm	200 mA	20.7 V	22.4 V	–	–	181 lm/W	> >80
LLE 24x280mm 1250lm 830 HV ADV5	**89603211**	830/359	–	802 lm	200 mA	20.7 V	22.4 V	–	–	185 lm/W	> >80
LLE 24x280mm 1250lm 835 HV ADV5	**28003405**	835/359	–	841 lm	200 mA	20.7 V	22.4 V	–	–	192 lm/W	> >80
LLE 24x280mm 1250lm 840 HV ADV5	**89603212**	840/359	–	851 lm	200 mA	20.7 V	22.4 V	–	–	195 lm/W	> >80
LLE 24x280mm 1250lm 850 HV ADV5	**89603213**	850/359	–	850 lm	200 mA	20.7 V	22.4 V	–	–	195 lm/W	> >80
LLE 24x280mm 1250lm 865 HV ADV5	**89603214**	865/359	–	844 lm	200 mA	20.7 V	22.4 V	–	–	194 lm/W	> >80
LLE 24x560mm 2400lm 827 HV ADV5	**89603215**	827/359	–	1,547 lm	200 mA	41.4 V	44.8 V	–	–	180 lm/W	> >80
LLE 24x560mm 2400lm 830 HV ADV5	**89603216**	830/359	–	1,613 lm	200 mA	41.4 V	44.8 V	–	–	187 lm/W	> >80
LLE 24x560mm 2400lm 835 HV ADV5	**28003262**	835/359	–	1,644 lm	200 mA	41.4 V	44.8 V	–	–	190 lm/W	> >80
LLE 24x560mm 2400lm 840 HV ADV5	**89603217**	840/359	–	1,700 lm	200 mA	41.4 V	44.8 V	–	–	196 lm/W	> >80
LLE 24x560mm 2400lm 850 HV ADV5	**89603218**	850/359	–	1,693 lm	200 mA	41.4 V	44.8 V	–	–	196 lm/W	> >80
LLE 24x560mm 2400lm 865 HV ADV5	**89603219**	865/359	–	1,694 lm	200 mA	41.4 V	44.8 V	–	–	195 lm/W	> >80
Operating mode HE at 250 mA											
LLE 24x70mm 325lm 830 HV ADV5 QTY4	**89603203**	830/359	–	251 lm	250 mA	5.2 V	5.7 V	–	–	179 lm/W	> >80
LLE 24x70mm 325lm 840 HV ADV5 QTY4	**89603204**	840/359	–	260 lm	250 mA	5.2 V	5.7 V	–	–	187 lm/W	> >80
LLE 24x70mm 325lm 850 HV ADV5 QTY4	**28003379**	850/359	–	258 lm	250 mA	5.2 V	5.7 V	–	–	185 lm/W	> >80
LLE 24x70mm 325lm 865 HV ADV5 QTY4	**28002946**	865/359	–	251 lm	250 mA	5.2 V	5.7 V	–	–	179 lm/W	> >80
LLE 24x140mm 650lm 830 HV ADV5	**89603206**	830/359	–	502 lm	250 mA	10.4 V	11.3 V	–	–	184 lm/W	> >80
LLE 24x140mm 650lm 835 HV ADV5	**28003404**	835/359	–	516 lm	250 mA	10.4 V	11.3 V	–	–	190 lm/W	> >80
LLE 24x140mm 650lm 840 HV ADV5	**89603207**	840/359	–	501 lm	250 mA	10.4 V	11.3 V	–	–	191 lm/W	> >80
LLE 24x280mm 1250lm 827 HV ADV5	**89603210**	827/359	–	972 lm	250 mA	20.9 V	22.6 V	–	–	176 lm/W	> >80
LLE 24x280mm 1250lm 830 HV ADV5	**89603211**	830/359	–	991 lm	250 mA	20.9 V	22.6 V	–	–	180 lm/W	> >80
LLE 24x280mm 1250lm 835 HV ADV5	**28003405**	835/359	–	1,032 lm	250 mA	20.9 V	22.6 V	–	–	187 lm/W	> >80
LLE 24x280mm 1250lm 840 HV ADV5	**89603212**	840/359	–	1,040 lm	250 mA	20.9 V	22.6 V	–	–	190 lm/W	> >80
LLE 24x280mm 1250lm 850 HV ADV5	**89603213**	850/359	–	1,026 lm	250 mA	20.9 V	22.6 V	–	–	187 lm/W	> >80
LLE 24x280mm 1250lm 865 HV ADV5	**89603214**	865/359	–	1,032 lm	250 mA	20.9 V	22.6 V	–	–	189 lm/W	> >80
LLE 24x560mm 2400lm 827 HV ADV5	**89603215**	827/359	–	1,898 lm	250 mA	41.8 V	45.3 V	–	–	175 lm/W	> >80
LLE 24x560mm 2400lm 830 HV ADV5	**89603216**	830/359	–	1,982 lm	250 mA	41.8 V	45.3 V	–	–	182 lm/W	> >80
LLE 24x560mm 2400lm 835 HV ADV5	**28003262**	835/359	–	2,015 lm	250 mA	41.8 V	45.3 V	–	–	185 lm/W	> >80
LLE 24x560mm 2400lm 840 HV ADV5	**89603217**	840/359	–	2,094 lm	250 mA	41.8 V	45.3 V	–	–	191 lm/W	> >80
LLE 24x560mm 2400lm 850 HV ADV5	**89603218**	850/359	–	2,058 lm	250 mA	41.8 V	45.3 V	–	–	188 lm/W	> >80
LLE 24x560mm 2400lm 865 HV ADV5	**89603219**	865/359	–	2,086 lm	250 mA	41.8 V	45.3 V	–	–	190 lm/W	> >80
Operating mode HE at 275 mA											
LLE 24x70mm 325lm 830 HV ADV5 QTY4	**89603203**	830/359	–	270 lm	275 mA	5.3 V	5.7 V	–	–	175 lm/W	> >80
LLE 24x70mm 325lm 840 HV ADV5 QTY4	**89603204**	840/359	–	279 lm	275 mA	5.3 V	5.7 V	–	–	183 lm/W	> >80
LLE 24x70mm 325lm 850 HV ADV5 QTY4	**28003379**	850/359	–	276 lm	275 mA	5.3 V	5.7 V	–	–	180 lm/W	> >80
LLE 24x70mm 325lm 865 HV ADV5 QTY4	**28002946**	865/359	–	270 lm	275 mA	5.3 V	5.7 V	–	–	175 lm/W	> >80
LLE 24x140mm 650lm 830 HV ADV5	**89603206**	830/359	–	541 lm	275 mA	10.5 V	11.4 V	–	–	180 lm/W	> >80
LLE 24x140mm 650lm 835 HV ADV5	**28003404**	835/359	–	561 lm	275 mA	10.5 V	11.4 V	–	–	186 lm/W	> >80
LLE 24x140mm 650lm 840 HV ADV5	**89603207**	840/359	–	559 lm	275 mA	10.5 V	11.4 V	–	–	189 lm/W	> >80
LLE 24x280mm 1250lm 827 HV ADV5	**89603210**	827/359	–	1,051 lm	275 mA	21.0 V	22.7 V	–	–	172 lm/W	> >80
LLE 24x280mm 1250lm 830 HV ADV5	**89603211**	830/359	–	1,068 lm	275 mA	21.0 V	22.7 V	–	–	176 lm/W	> >80
LLE 24x280mm 1250lm 835 HV ADV5	**28003405**	835/359	–	1,122 lm	275 mA	21.0 V	22.7 V	–	–	183 lm/W	> >80
LLE 24x280mm 1250lm 840 HV ADV5	**89603212**	840/359	–	1,132 lm	275 mA	21.0 V	22.7 V	–	–	186 lm/W	> >80
LLE 24x280mm 1250lm 850 HV ADV5	**89603213**	850/359	–	1,116 lm	275 mA	21.0 V	22.7 V	–	–	182 lm/W	> >80
LLE 24x280mm 1250lm 865 HV ADV5	**89603214**	865/359	–	1,124 lm	275 mA	21.0 V	22.7 V	–	–	185 lm/W	> >80
LLE 24x560mm 2400lm 827 HV ADV5	**89603215**	827/359	–	2,053 lm	275 mA	42.0 V	45.5 V	–	–	171 lm/W	> >80
LLE 24x560mm 2400lm 830 HV ADV5	**89603216**	830/359	–	2,142 lm	275 mA	42.0 V	45.5 V	–	–	178 lm/W	> >80
LLE 24x560mm 2400lm 835 HV ADV5	**28003262**	835/359	–	2,187 lm	275 mA	42.0 V	45.5 V	–	–	181 lm/W	> >80
LLE 24x560mm 2400lm 840 HV ADV5	**89603217**	840/359	–	2,254 lm	275 mA	42.0 V	45.5 V	–	–	187 lm/W	> >80
LLE 24x560mm 2400lm 850 HV ADV5	**89603218**	850/359	–	2,214 lm	275 mA	42.0 V	45.5 V	–	–	184 lm/W	> >80
LLE 24x560mm 2400lm 865 HV ADV5	**89603219**	865/359	–	2,246 lm	275 mA	42.0 V	45.5 V	–	–	186 lm/W	> >80
Operating mode NM at 300 mA											
LLE 24x70mm 325lm 830 HV ADV5 QTY4	**89603203**	830/359	300 lm	295 lm	300 mA	5.3 V	5.7 V	1.70 W	176 lm/W	174 lm/W	> >80
LLE 24x70mm 325lm 840 HV ADV5 QTY4	**89603204**	840/359	313 lm	303 lm	300 mA	5.3 V	5.7 V	1.70 W	184 lm/W	180 lm/W	> >80
LLE 24x70mm 325lm 850 HV ADV5 QTY4	**28003379**	850/359	309 lm	300 lm	300 mA	5.3 V	5.7 V	1.70 W	182 lm/W	178 lm/W	> >80
LLE 24x70mm 325lm 865 HV ADV5 QTY4	**28002946**	865/359	308 lm	299 lm	300 mA	5.3 V	5.7 V	1.70 W	181 lm/W	177 lm/W	> >80
LLE 24x140mm 650lm 830 HV ADV5	**89603206**	830/359	599 lm	584 lm	300 mA	10.5 V	11.4 V	3.30 W	182 lm/W	179 lm/W	> >80
LLE 24x140mm 650lm 835 HV ADV5	**28003404**	835/359	621 lm	606 lm	300 mA	10.6 V	11.5 V	3.30 W	188 lm/W	184 lm/W	> >80
LLE 24x140mm 650lm 840 HV ADV5	**89603207**	830/359	627 lm	612 lm	300 mA	10.5 V	11.4 V	3.30 W	190 lm/W	186 lm/W	> >80

Type	Article number	Photometric code	Useful luminous flux at tp = 25 °C[3]	Expected luminous flux at tp rated[4]	Typ. forward current	Min. forward voltage at tp rated[5]	Max. forward voltage at tp = 25 °C[5]	Power consumption Pon at tp = 25 °C[6]	Efficacy of the module at tp = 25 °C	Expected efficacy of the module at tp rated	Colour rendering index CRI
LLE 24x280mm 1250lm 827 HV ADV5	**89603210**	827/359	1,160 lm	1,130 lm	300 mA	21.1 V	22.8 V	6.70 W	173 lm/W	170 lm/W	> >80
LLE 24x280mm 1250lm 830 HV ADV5	**89603211**	830/359	1,189 lm	1,160 lm	300 mA	21.1 V	22.8 V	6.70 W	177 lm/W	175 lm/W	> >80
LLE 24x280mm 1250lm 835 HV ADV5	**28003405**	835/359	1,242 lm	1,212 lm	300 mA	21.1 V	22.8 V	6.70 W	185 lm/W	181 lm/W	> >80
LLE 24x280mm 1250lm 840 HV ADV5	**89603212**	840/359	1,254 lm	1,225 lm	300 mA	21.1 V	22.8 V	6.70 W	187 lm/W	183 lm/W	> >80
LLE 24x280mm 1250lm 850 HV ADV5	**89603213**	850/359	1,254 lm	1,226 lm	300 mA	21.1 V	22.8 V	6.70 W	187 lm/W	183 lm/W	> >80
LLE 24x280mm 1250lm 865 HV ADV5	**89603214**	865/359	1,254 lm	1,215 lm	300 mA	21.1 V	22.8 V	6.70 W	187 lm/W	183 lm/W	> >80
LLE 24x560mm 2400lm 827 HV ADV5	**89603215**	827/359	2,287 lm	2,229 lm	300 mA	42.2 V	45.7 V	13.31 W	172 lm/W	169 lm/W	> >80
LLE 24x560mm 2400lm 830 HV ADV5	**89603216**	830/359	2,390 lm	2,322 lm	300 mA	42.2 V	45.7 V	13.31 W	180 lm/W	177 lm/W	> >80
LLE 24x560mm 2400lm 835 HV ADV5	**28003262**	835/359	2,436 lm	2,368 lm	300 mA	42.2 V	45.7 V	13.30 W	183 lm/W	179 lm/W	> >80
LLE 24x560mm 2400lm 840 HV ADV5	**89603217**	840/359	2,507 lm	2,439 lm	300 mA	42.2 V	45.7 V	13.31 W	188 lm/W	184 lm/W	> >80
LLE 24x560mm 2400lm 850 HV ADV5	**89603218**	850/359	2,507 lm	2,431 lm	300 mA	42.2 V	45.7 V	13.31 W	188 lm/W	185 lm/W	> >80
LLE 24x560mm 2400lm 865 HV ADV5	**89603219**	865/359	2,507 lm	2,439 lm	300 mA	42.2 V	45.7 V	13.31 W	188 lm/W	184 lm/W	> >80
Operating mode HO at 350 mA											
LLE 24x70mm 325lm 830 HV ADV5 QTY4	**89603203**	830/359	–	344 lm	350 mA	5.3 V	5.8 V	–	–	170 lm/W	> >80
LLE 24x70mm 325lm 840 HV ADV5 QTY4	**89603204**	840/359	–	347 lm	350 mA	5.3 V	5.8 V	–	–	177 lm/W	> >80
LLE 24x70mm 325lm 850 HV ADV5 QTY4	**28003379**	850/359	–	346 lm	350 mA	5.3 V	5.8 V	–	–	174 lm/W	> >80
LLE 24x70mm 325lm 865 HV ADV5 QTY4	**28002946**	865/359	–	336 lm	350 mA	5.3 V	5.8 V	–	–	171 lm/W	> >80
LLE 24x140mm 650lm 830 HV ADV5	**89603206**	830/359	–	672 lm	350 mA	10.6 V	11.5 V	–	–	175 lm/W	> >80
LLE 24x140mm 650lm 835 HV ADV5	**28003404**	835/359	–	701 lm	350 mA	10.7 V	11.5 V	–	–	181 lm/W	> >80
LLE 24x140mm 650lm 840 HV ADV5	**89603207**	840/359	–	705 lm	350 mA	10.6 V	11.5 V	–	–	183 lm/W	> >80
LLE 24x280mm 1250lm 827 HV ADV5	**89603210**	827/359	–	1,314 lm	350 mA	21.3 V	23.0 V	–	–	167 lm/W	> >80
LLE 24x280mm 1250lm 830 HV ADV5	**89603211**	830/359	–	1,339 lm	350 mA	21.3 V	23.0 V	–	–	171 lm/W	> >80
LLE 24x280mm 1250lm 835 HV ADV5	**28003405**	835/359	–	1,402 lm	350 mA	21.3 V	23.0 V	–	–	178 lm/W	> >80
LLE 24x280mm 1250lm 840 HV ADV5	**89603212**	840/359	–	1,410 lm	350 mA	21.3 V	23.0 V	–	–	180 lm/W	> >80
LLE 24x280mm 1250lm 850 HV ADV5	**89603213**	850/359	–	1,392 lm	350 mA	21.3 V	23.0 V	–	–	178 lm/W	> >80
LLE 24x280mm 1250lm 865 HV ADV5	**89603214**	865/359	–	1,399 lm	350 mA	21.3 V	23.0 V	–	–	179 lm/W	> >80
LLE 24x560mm 2400lm 827 HV ADV5	**89603215**	827/359	–	2,574 lm	350 mA	42.5 V	46.1 V	–	–	166 lm/W	> >80
LLE 24x560mm 2400lm 830 HV ADV5	**89603216**	830/359	–	2,686 lm	350 mA	42.5 V	46.1 V	–	–	173 lm/W	> >80
LLE 24x560mm 2400lm 835 HV ADV5	**28003262**	835/359	–	2,734 lm	350 mA	42.5 V	46.1 V	–	–	176 lm/W	> >80
LLE 24x560mm 2400lm 840 HV ADV5	**89603217**	840/359	–	2,833 lm	350 mA	42.5 V	46.1 V	–	–	182 lm/W	> >80
LLE 24x560mm 2400lm 850 HV ADV5	**89603218**	850/359	–	2,786 lm	350 mA	42.5 V	46.1 V	–	–	179 lm/W	> >80
LLE 24x560mm 2400lm 865 HV ADV5	**89603219**	865/359	–	2,822 lm	350 mA	42.5 V	46.1 V	–	–	181 lm/W	> >80
Operating mode HO at 400 mA											
LLE 24x70mm 325lm 830 HV ADV5 QTY4	**89603203**	830/359	–	393 lm	400 mA	5.4 V	5.8 V	–	–	170 lm/W	> >80
LLE 24x70mm 325lm 840 HV ADV5 QTY4	**89603204**	840/359	–	400 lm	400 mA	5.4 V	5.8 V	–	–	177 lm/W	> >80
LLE 24x70mm 325lm 850 HV ADV5 QTY4	**28003379**	850/359	–	398 lm	400 mA	5.4 V	5.8 V	–	–	174 lm/W	> >80
LLE 24x70mm 325lm 865 HV ADV5 QTY4	**28002946**	865/359	–	389 lm	400 mA	5.4 V	5.8 V	–	–	170 lm/W	> >80
LLE 24x140mm 650lm 830 HV ADV5	**89603206**	830/359	–	774 lm	400 mA	10.7 V	11.6 V	–	–	175 lm/W	> >80
LLE 24x140mm 650lm 835 HV ADV5	**28003404**	835/359	–	806 lm	400 mA	10.7 V	11.6 V	–	–	180 lm/W	> >80
LLE 24x140mm 650lm 840 HV ADV5	**89603207**	840/359	–	812 lm	400 mA	10.7 V	11.6 V	–	–	182 lm/W	> >80
LLE 24x280mm 1250lm 827 HV ADV5	**89603210**	827/359	–	1,502 lm	400 mA	21.5 V	23.2 V	–	–	167 lm/W	> >80
LLE 24x280mm 1250lm 830 HV ADV5	**89603211**	830/359	–	1,537 lm	400 mA	21.5 V	23.2 V	–	–	171 lm/W	> >80
LLE 24x280mm 1250lm 835 HV ADV5	**28003405**	835/359	–	1,613 lm	400 mA	21.5 V	23.2 V	–	–	177 lm/W	> >80
LLE 24x280mm 1250lm 840 HV ADV5	**89603212**	840/359	–	1,623 lm	400 mA	21.5 V	23.2 V	–	–	179 lm/W	> >80
LLE 24x280mm 1250lm 850 HV ADV5	**89603213**	850/359	–	1,601 lm	400 mA	21.5 V	23.2 V	–	–	177 lm/W	> >80
LLE 24x280mm 1250lm 865 HV ADV5	**89603214**	865/359	–	1,611 lm	400 mA	21.5 V	23.2 V	–	–	179 lm/W	> >80
LLE 24x560mm 2400lm 827 HV ADV5	**89603215**	827/359	–	2,959 lm	400 mA	42.9 V	46.4 V	–	–	166 lm/W	> >80
LLE 24x560mm 2400lm 830 HV ADV5	**89603216**	830/359	–	3,085 lm	400 mA	42.9 V	46.4 V	–	–	173 lm/W	> >80
LLE 24x560mm 2400lm 835 HV ADV5	**28003262**	835/359	–	3,145 lm	400 mA	42.9 V	46.4 V	–	–	176 lm/W	> >80
LLE 24x560mm 2400lm 840 HV ADV5	**89603217**	840/359	–	3,241 lm	400 mA	42.9 V	46.4 V	–	–	181 lm/W	> >80
LLE 24x560mm 2400lm 850 HV ADV5	**89603218**	850/359	–	3,188 lm	400 mA	42.9 V	46.4 V	–	–	178 lm/W	> >80
LLE 24x560mm 2400lm 865 HV ADV5	**89603219**	865/359	–	3,228 lm	400 mA	42.9 V	46.4 V	–	–	180 lm/W	> >80
Operating mode HO at 500 mA											
LLE 24x70mm 325lm 830 HV ADV5 QTY4	**89603203**	830/359	–	472 lm	500 mA	5.5 V	5.9 V	–	–	162 lm/W	> >80
LLE 24x70mm 325lm 840 HV ADV5 QTY4	**89603204**	840/359	–	486 lm	500 mA	5.5 V	5.9 V	–	–	169 lm/W	> >80
LLE 24x70mm 325lm 850 HV ADV5 QTY4	**28003379**	850/359	–	487 lm	500 mA	5.2 V	5.6 V	–	–	167 lm/W	> >80
LLE 24x70mm 325lm 865 HV ADV5 QTY4	**28002946**	865/359	–	469 lm	500 mA	5.5 V	5.9 V	–	–	164 lm/W	> >80
LLE 24x140mm 650lm 830 HV ADV5	**89603206**	830/359	–	940 lm	500 mA	10.9 V	11.8 V	–	–	167 lm/W	> >80
LLE 24x140mm 650lm 835 HV ADV5	**28003404**	835/359	–	977 lm	500 mA	10.9 V	11.8 V	–	–	172 lm/W	> >80
LLE 24x140mm 650lm 840 HV ADV5	**89603207**	830/359	–	982 lm	500 mA	10.9 V	11.8 V	–	–	174 lm/W	> >80
LLE 24x280mm 1250lm 827 HV ADV5	**89603210**	827/359	–	1,824 lm	500 mA	21.8 V	23.5 V	–	–	159 lm/W	> >80
LLE 24x280mm 1250lm 830 HV ADV5	**89603211**	830/359	–	1,866 lm	500 mA	21.8 V	23.5 V	–	–	163 lm/W	> >80
LLE 24x280mm 1250lm 835 HV ADV5	**28003405**	835/359	–	1,953 lm	500 mA	21.8 V	23.5 V	–	–	170 lm/W	> >80
LLE 24x280mm 1250lm 840 HV ADV5	**89603212**	840/359	–	1,973 lm	500 mA	21.8 V	23.5 V	–	–	172 lm/W	> >80
LLE 24x280mm 1250lm 850 HV ADV5	**89603213**	850/359	–	1,976 lm	500 mA	21.8 V	23.5 V	–	–	172 lm/W	> >80
LLE 24x280mm 1250lm 865 HV ADV5	**89603214**	865/359	–	1,958 lm	500 mA	21.8 V	23.5 V	–	–	172 lm/W	> >80
LLE 24x560mm 2400lm 827 HV ADV5	**89603215**	827/359	–	3,591 lm	500 mA	43.6 V	47.1 V	–	–	158 lm/W	> >80
LLE 24x560mm 2400lm 830 HV ADV5	**89603216**	830/359	–	3,750 lm	500 mA	43.6 V	47.1 V	–	–	165 lm/W	> >80
LLE 24x560mm 2400lm 835 HV ADV5	**28003262**	835/359	–	3,815 lm	500 mA	43.6 V	47.1 V	–	–	167 lm/W	> >80

Type	Article number	Photometric code	Useful luminous flux at tp = 25 °C③	Expected luminous flux at tp rated④	Typ. forward current	Min. forward voltage at tp rated⑤	Max. forward voltage at tp = 25 °C⑤	Power consumption Pon at tp = 25 °C⑥	Efficacy of the module at tp = 25 °C	Expected efficacy of the module at tp rated	Colour rendering index CRI
LLE 24x560mm 2400lm 840 HV ADV5	**89603217**	840/359	–	3,935 lm	500 mA	43.6 V	47.1 V	–	–	173 lm/W	> >80
LLE 24x560mm 2400lm 850 HV ADV5	**89603218**	850/359	–	3,926 lm	500 mA	43.6 V	47.1 V	–	–	173 lm/W	> >80
LLE 24x560mm 2400lm 865 HV ADV5	**89603219**	865/359	–	3,940 lm	500 mA	43.6 V	47.1 V	–	–	173 lm/W	> >80

② If mounted with M4 screws and plastic washers.
③ Tolerance of useful light flux - 0 % / + 15 %. Measurement uncertainty ± 10 %.
④ Tolerance of expected light flux - 0 % / + 15 %. Measurement uncertainty ± 10 %. Based on calculation.
⑤ Measurement tolerance forward voltage: ±0.1 V.
⑥ Tolerance of power consumption Pon ± 10 %. Measurement uncertainty ± 5 %.

LINEAR COVER LLE

Accessory

Product description

_ LINEAR COVER for LLE
_ Protection against direct touch for non-SELV applications (recommendation LLE 20: use all fixing points and screwed Endcap, recommendation LLE 24: use all fixing points)
_ Fast snap on mounting on to LLE 20: with M4 screws and plastic washers, to LLE 24: with clips or plastic washers
_ High transmission: transparent, semi-transparent and diffuse
_ Material: PMMA
_ Tolerances: ± 1 mm for 597 mm length (ends finished), + 10 mm from length 1,150 mm (ends raw)

Website
http://www.tridonic.com/28000338

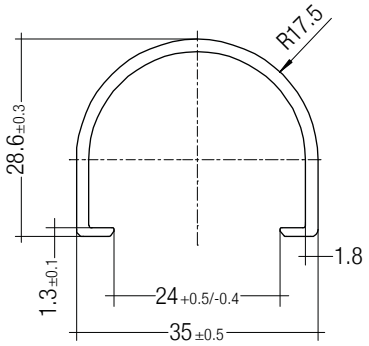

Ordering data

Type	Article number	Colour	Length L	Efficiency	Packaging, carton	Weight per pc.
LINEAR COVER SY Transparent 1600mm	**28000338**	Transparent	1,600 mm	94 %	12 pc(s).	0.272 kg
LINEAR COVER SY Frosted 1800mm	**28000437**	Semi-transparent	1,800 mm	87 %	12 pc(s).	0.308 kg
LINEAR COVER SY Frosted 1600mm	**28000339**	Semi-transparent	1,600 mm	87 %	12 pc(s).	0.272 kg
LINEAR COVER SY Frosted 1500mm	**28000435**	Semi-transparent	1,500 mm	87 %	12 pc(s).	0.244 kg
LINEAR COVER SY Frosted 1200mm	**28000422**	Semi-transparent	1,200 mm	87 %	12 pc(s).	0.205 kg
LINEAR COVER SY Frosted 597mm	**28000340**	Semi-transparent	597 mm	87 %	12 pc(s).	0.102 kg
LINEAR COVER SY Diffuse 1800mm	**28000438**	Diffuse	1,800 mm	76 %	12 pc(s).	0.308 kg
LINEAR COVER SY Diffuse 1600mm	**28000341**	Diffuse	1,600 mm	76 %	12 pc(s).	0.272 kg
LINEAR COVER SY Diffuse 1500mm	**28000436**	Diffuse	1,500 mm	76 %	12 pc(s).	0.257 kg
LINEAR COVER SY Diffuse 1200mm	**28000434**	Diffuse	1,200 mm	76 %	12 pc(s).	0.205 kg
LINEAR COVER SY Diffuse 597mm	**28000342**	Diffuse	597 mm	76 %	12 pc(s).	0.102 kg

ACL ENDCAP LLE

Accessory

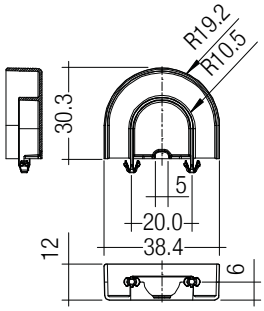

Product description

- ENDCAP for LLE
- PUSH-FIX: Fast snap on mounting (sheet thickness 0.5 – 1.0 mm), for drilling hole 4 mm
- SCREW-FIX: Screw mounting with EJOT Delta PT WN 5451 30x8 (not included), tightening torque 0.7 Nm
- Clip made of polycarbonate

Website
http://www.tridonic.com/28001037

Ordering data

Type	Article number	Colour	Packaging, carton	Weight per pc.
ACL ENDCAP LLE24 PUSH-FIX	**28001037**	White	480 pc(s).	0.003 kg
ACL ENDCAP LLE24 SCREW-FIX	**28002315**	White	480 pc(s).	0.003 kg

ACL LINEAR LENS 24mm

Accessory

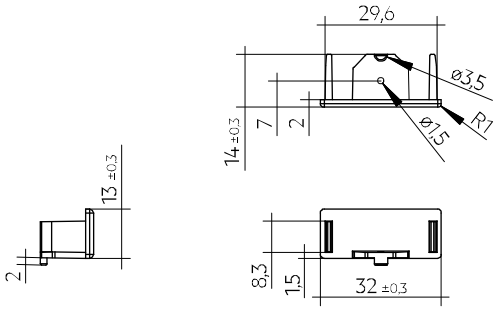

Product description LINEAR LENS

_ Linear lens for LLE 20 / 24
_ Available with different beam characteristics
_ Protection against direct touch for non-SELV applications (recommendation: use all fixing points)
_ Fast snap on mounting on to LLE 20: with M4 screws and plastic washers, to LLE 24: with clips or plastic washers
_ Recommendation: Fastening with screws and plastic washers, see 2.3 Heat sink specifications in data sheet
_ Material: PMMA
_ Available lengths: 1,200, 1,500 and 1,800 mm, Tolerance: + 10 mm (ends raw)
_ Max. permissible temperature 80 °C
_ Photometric data available on website

Product description Endcap

_ ENDCAP for LINEAR LENS 24mm INTENSE, ASY and DASY
_ Mounting by clipping in and screwing from below using screw EJOT Delta PT WN 5451 20x4, tightening torque 0.7 Nm
_ Made of Polyamide UL94 V0

Website
http://www.tridonic.com/28001428

Ordering data

Type	Article number	Length L	Beam characteristic	Efficiency	Packaging, carton	Weight per pc.
ACL LINEAR LENS 24x1200mm 60°	**28001428**	1,200 mm	60°	97 %	21 pc(s).	0.196 kg
ACL LINEAR LENS 24x1200mm 90°	**28001429**	1,200 mm	90°	97 %	21 pc(s).	0.165 kg
ACL LINEAR LENS 24x1500mm 60°	**28000953**	1,500 mm	60°	97 %	21 pc(s).	0.261 kg
ACL LINEAR LENS 24x1500mm 90°	**28000955**	1,500 mm	90°	97 %	21 pc(s).	0.221 kg
ACL LINEAR LENS 24x1200mm INTENSE	**28002024**	1,200 mm	40°	95 %	18 pc(s).	0.261 kg
ACL LINEAR LENS 24x1500mm INTENSE	**28002025**	1,500 mm	40°	95 %	18 pc(s).	0.326 kg
ACL LINEAR LENS 24x1800mm INTENSE	**28002026**	1,800 mm	40°	95 %	18 pc(s).	0.392 kg
ACL LINEAR LENS 24x1200mm BATWING	**28002027**	1,200 mm	batwing	95 %	18 pc(s).	0.275 kg
ACL LINEAR LENS 24x1500mm BATWING	**28002028**	1,500 mm	batwing	95 %	18 pc(s).	0.344 kg
ACL LINEAR LENS 24x1800mm BATWING	**28002029**	1,800 mm	batwing	95 %	18 pc(s).	0.412 kg
ACL LINEAR LENS 24x1200mm ASY	**28002030**	1,200 mm	asymmetric	95 %	18 pc(s).	0.250 kg
ACL LINEAR LENS 24x1500mm ASY	**28002031**	1,500 mm	asymmetric	95 %	18 pc(s).	0.312 kg
ACL LINEAR LENS 24x1800mm ASY	**28002032**	1,800 mm	asymmetric	95 %	18 pc(s).	0.375 kg
ACL LINEAR LENS 24x1200mm DASY	**28002033**	1,200 mm	double asymmetric	92 %	18 pc(s).	0.249 kg
ACL LINEAR LENS 24x1500mm DASY	**28002034**	1,500 mm	double asymmetric	92 %	18 pc(s).	0.311 kg
ACL LINEAR LENS 24x1800mm DASY	**28002035**	1,800 mm	double asymmetric	92 %	18 pc(s).	0.373 kg
ACL Endcap LENS 24mm PSF	**28002669**	–	–	–	3,600 pc(s).	0.003 kg

ACL CLIP 4.3mm

Accessory

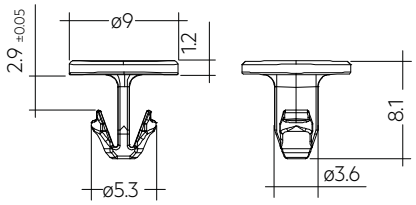

Product description

- Clip for fixation of LED modules with 4.3 mm holes
- Fast snap on mounting (sheet thickness 0.5 – 1.0 mm for PUSH-FIX and 1 – 2 mm for PUSH-FIX Long)
- For drilling hole 4 mm
- Clip made of polycarbonate
- Minimum sales quantity 500 pcs.

Website
http://www.tridonic.com/28001036

Ordering data

Type	Article number	Colour	Packaging, bag ①	Weight per pc.
ACL CLIP 4.3mm PUSH-FIX	**28001036**	White	500 pc(s).	0.001 kg
ACL CLIP 4,3mm PUSH-FIX Long	**28002314**	Transparent	500 pc(s).	0.001 kg

① Minimum sales quantity 500 pcs.

ACL BRIDGE LLE24/40

Accessory

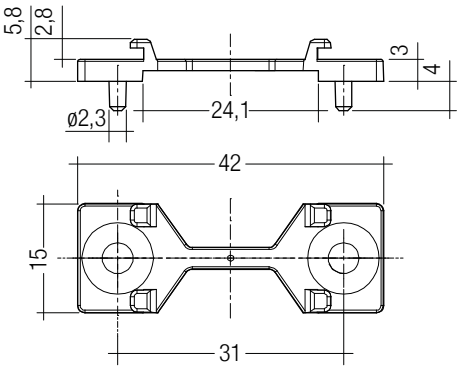

Product description

- Enables the fixation of 24 mm wide Tridonic LED modules to fixtures made for 40 mm wide modules
- Ideal for extruded aluminium gear trays made for 40 mm modules with pre-alignment knobs
- Clip-on for LINEAR COVER and LINEAR LENS ①
- For LLE 24 with 280 mm module minimum 2 bridges required
- For LLE 24 with 560 mm module minimum 3 bridges required
- Fixation via M3 or M4 countersunk screw, max. tightening torque 0.5 Nm
- Material: white polycarbonate
- Minimum sales quantity 600 pcs.

① Beam characteristics will change due to the elevated fixation (see photometric files for details).

Website
http://www.tridonic.com/28001205

Ordering data

Type	Article number	Colour	Packaging, carton	Weight per pc.
ACL BRIDGE LLE24/40 SCREW-FIX	**28001205**	White	600 pc(s).	0.001 kg

1. Standards

IEC 62031
IEC 62471
IEC 61000-4-2
IEC 62778
IEC 61547
UL 8750 (for CLASS2 circuits and dry locations)

1.1 Photometric code

Key for photometric code, e. g. 830 / 349

1st digit		2nd + 3rd digit	4th digit	5th digit	6th digit	
Code	CRI	Colour temperature in Kelvin x 100	MacAdam initial	MacAdam after 25% of the lifetime (max.6000h)	Luminous flux after 25% of the lifetime (max.6000h)	
					Code	Luminous flux
7	70 – 79				7	≥ 70 %
8	80 – 89				8	≥ 80 %
9	≥90				9	≥ 90 %

1.2 Energy classification

Type	Colour temperature	Forward current	Energy classification	Energy consumption
LLE 24x70mm 325lm 830 HV ADV5 QTY4	3,000 K	300 mA	C	2 kWh / 1,000 h
LLE 24x70mm 325lm 840 HV ADV5 QTY4	4,000 K	300 mA	C	2 kWh / 1,000 h
LLE 24x70mm 325lm 850 HV ADV5 QTY4	5,000 K	300 mA	C	2 kWh / 1,000 h
LLE 24x70mm 325lm 865 HV ADV5 QTY4	6,500 K	300 mA	C	2 kWh / 1,000 h
LLE 24x140mm 650lm 830 HV ADV5	3,000 K	300 mA	C	4 kWh / 1,000 h
LLE 24x140mm 650lm 835 HV ADV5	3,500 K	300 mA	C	4 kWh / 1,000 h
LLE 24x140mm 650lm 840 HV ADV5	4,000 K	300 mA	C	4 kWh / 1,000 h
LLE 24x280mm 1250lm 827 HV ADV5	2,700 K	300 mA	C	7 kWh / 1,000 h
LLE 24x280mm 1250lm 830 HV ADV5	3,000 K	300 mA	C	7 kWh / 1,000 h
LLE 24x280mm 1250lm 835 HV ADV5	3,500 K	300 mA	C	7 kWh / 1,000 h
LLE 24x280mm 1250lm 840 HV ADV5	4,000 K	300 mA	C	7 kWh / 1,000 h
LLE 24x280mm 1250lm 850 HV ADV5	5,000 K	300 mA	C	7 kWh / 1,000 h
LLE 24x280mm 1250lm 865 HV ADV5	6,500 K	300 mA	C	7 kWh / 1,000 h
LLE 24x560mm 2400lm 827 HV ADV5	2,700 K	300 mA	D	14 kWh / 1,000 h
LLE 24x560mm 2400lm 830 HV ADV5	3,000 K	300 mA	C	14 kWh / 1,000 h
LLE 24x560mm 2400lm 835 HV ADV5	3,500 K	300 mA	C	14 kWh / 1,000 h
LLE 24x560mm 2400lm 840 HV ADV5	4,000 K	300 mA	C	14 kWh / 1,000 h
LLE 24x560mm 2400lm 850 HV ADV5	5,000 K	300 mA	C	14 kWh / 1,000 h
LLE 24x560mm 2400lm 865 HV ADV5	6,500 K	300 mA	C	14 kWh / 1,000 h

Energy label and further information at www.tridonic.com in the certificates tab of the corresponding product page and at the EPREL data base https://eprel.ec.europa.eu/

2. Thermal details

2.1 tc point, ambient temperature and lifetime

The temperature at tp reference point is crucial for the light output and lifetime of a LED product.

For LLE a tp temperature of 50 °C has to be complied in order to achieve an optimum between heat sink requirements, light output and lifetime.

Compliance with the maximum permissible reference temperature at the tc point must be checked under operating conditions in a thermally stable state. The maximum value must be determined under worst-case conditions for the relevant application.

The tc and tp temperature of LED modules from Tridonic are measured at the same reference point.

2.2 Storage and humidity

Storage temperature	-40 ... +80 °C

Operation only in non condensing environment.
Humidity during processing of the module should be between 30 to 70 %.

2.3 Heat sink values

LLE 24x70mm 325lm ADV5

ta	tp	Forward current	$R_{th, hs-a}$	Cooling area
25 °C	50 °C	300 mA	28.97 K/W	23 cm²
25 °C	50 °C	500 mA	17.21 K/W	39 cm²
35 °C	50 °C	300 mA	17.37 K/W	38 cm²
35 °C	50 °C	500 mA	10.32 K/W	65 cm²
40 °C	50 °C	300 mA	11.57 K/W	58 cm²
40 °C	50 °C	500 mA	6.87 K/W	97 cm²
45 °C	50 °C	300 mA	5.77 K/W	115 cm²
45 °C	50 °C	500 mA	3.42 K/W	195 cm²

LLE 24x140mm 650lm ADV5

ta	tp	Forward current	$R_{th, hs-a}$	Cooling area
25 °C	50 °C	300 mA	14.49 K/W	46 cm²
25 °C	50 °C	500 mA	8.61 K/W	77 cm²
35 °C	50 °C	300 mA	8.69 K/W	77 cm²
35 °C	50 °C	500 mA	5.16 K/W	129 cm²
40 °C	50 °C	300 mA	5.79 K/W	115 cm²
40 °C	50 °C	500 mA	3.43 K/W	194 cm²
45 °C	50 °C	300 mA	2.89 K/W	231 cm²
45 °C	50 °C	500 mA	1.71 K/W	390 cm²

LLE 24x280mm 1250lm ADV5

ta	tp	Forward current	$R_{th, hs-a}$	Cooling area
25 °C	50 °C	300 mA	7.25 K/W	92 cm²
25 °C	50 °C	500 mA	4.30 K/W	155 cm²
35 °C	50 °C	300 mA	4.35 K/W	153 cm²
35 °C	50 °C	500 mA	2.58 K/W	259 cm²
40 °C	50 °C	300 mA	2.90 K/W	230 cm²
40 °C	50 °C	500 mA	1.72 K/W	388 cm²
45 °C	50 °C	300 mA	1.44 K/W	462 cm²
45 °C	50 °C	500 mA	0.85 K/W	780 cm²

LLE 24x560mm 2400lm ADV5

ta	tp	Forward current	$R_{th, hs-a}$	Cooling area
25 °C	50 °C	300 mA	3.62 K/W	184 cm²
25 °C	50 °C	500 mA	2.15 K/W	310 cm²
35 °C	50 °C	300 mA	2.17 K/W	307 cm²
35 °C	50 °C	500 mA	1.29 K/W	517 cm²
40 °C	50 °C	300 mA	1.45 K/W	460 cm²
40 °C	50 °C	500 mA	0.86 K/W	776 cm²
45 °C	50 °C	300 mA	0.72 K/W	923 cm²
45 °C	50 °C	500 mA	0.43 K/W	1,559 cm²

Notes
The actual cooling surface can differ because of the material, the structural shape, outside influences and the installation situation. Depending on the heat sink a heat conducting paste or heat conducting film might be necessary to keep the specified tp temperature.

3. Installation / wiring

3.1 Electrical supply/choice of LED driver

LLE modules from Tridonic are not protected against overvoltages, overcurrents, overloads or short-circuit currents. Safe and reliable operation can only be guaranteed in conjunction with a LED driver which complies with the relevant standards. The use of LED driver from Tridonic in combination with LLE modules guarantees the necessary protection for safe and reliable operation.

If a LED driver other than Tridonic is used, it must provide the following protection:
- Short-circuit protection
- Overload protection
- Overtemperature protection

LLE modules must be supplied by a constant current LED driver. Operation with a constant voltage LED driver will lead to an irreversible damage of the module.

Wrong polarity can damage the LLE.

The LLE module is designed for serial wiring.

With parallel wiring tolerance-related differences in output are possible (thermal stress of the module) and can cause differences in brightness.

If a wire breaks or a complete module fails then the current passing through the other module increases. This may reduce its life considerably.

Max. 8 pieces 280 mm modules or 4 pieces 560 mm modules may be connected in parallel.

LLE can be operated either from SELV LED drivers or from LED drivers with LV output voltage.

LLE are basic insulated up to 440 V (if mounted with M4 screws with head diameter 7 mm in combination with plastic washers) against ground and can be mounted directly on earthed metal parts of the luminaire. If the max. output voltage of the LED driver (also against earth) is above 440 V, an additional insulation between LED module and heat sink is required (for example by insulated thermal pads) or by a suitable luminaire construction.
At voltages > 60 V an additional protection against direct touch (test finger) to the light emitting side of the module has to be guaranteed. This is typically achieved by means of a non removable light distributor over the module.

3.2 Wiring

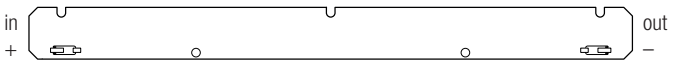

Wiring examples for serial wiring

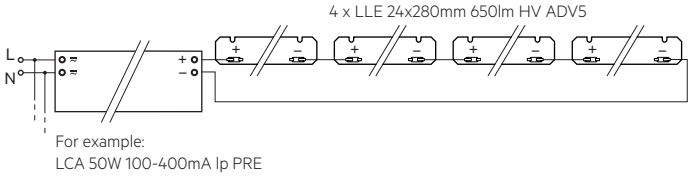

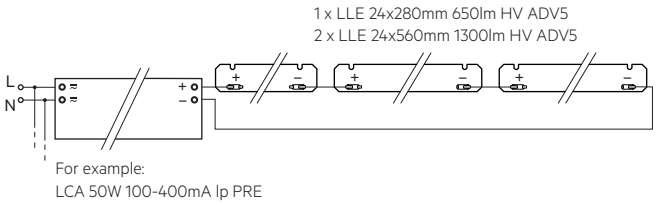

Wiring examples for parallel wiring

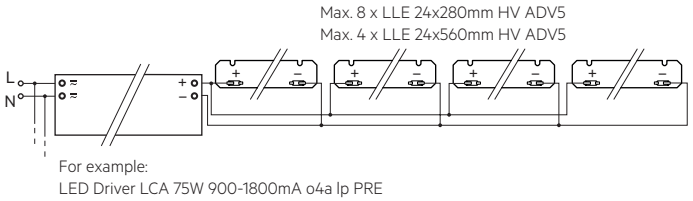

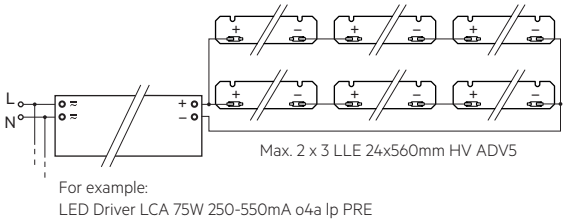

3.3 Wiring type and cross section

For wiring use stranded wire with ferrules or solid wire from 0.2 to 0.75 mm². For the push-wire connection you have to strip the insulation (8–9 mm).

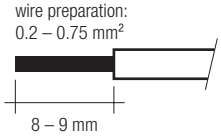

To remove the wires use a suitabel tool (e.g. Microcon release pin) or through twist and pull .

3.4 Mounting instruction

None of the components of the LLE (substrate, LED, electronic components etc.) may be exposed to tensile or compressive stresses.

Max. torque for fixing: 0.5 Nm.

The LED modules are mounted onto a heat sink with min. 3 screws per module or ACL CLIP 4.3mm.

The LLE 24x70mm module is delivered as a board of 280mm (4 pcs.) and must be separated.

Only touch the module at the edge to separate the modules (see marking below).

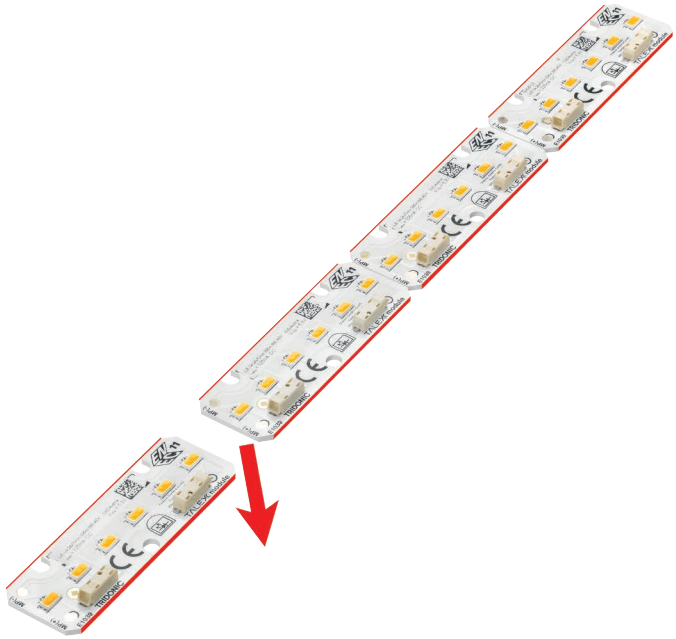

Cut out on gear tray for backside terminal:

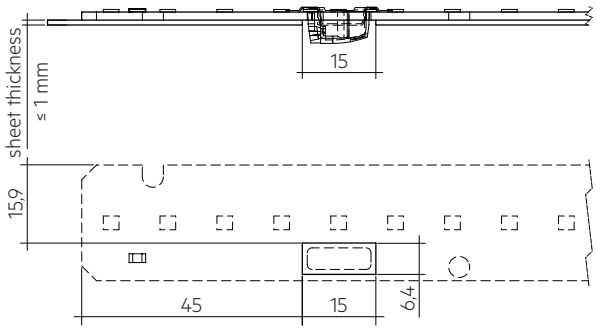

Chemical substance may harm the LED module. Chemical reactions could lead to colour shift, reduced luminous flux or a total failure of the module caused by corrosion of electrical connections.

Materials which are used in LED applications (e.g. sealings, adhesives) must not produce dissolver gas. They must not be condensation curing based, acetate curing based or contain sulfur, chlorine or phthalate.
Avoid corrosive atmosphere during usage and storage.

3.5 EOS/ESD safety guidelines

The device / module contains components that are sensitive to electrostatic discharge and may only be installed in the factory and on site if appropriate EOS/ESD protection measures have been taken. No special measures need be taken for devices/modules with enclosed casings (contact with the pc board not possible), just normal installation practice. Please note the requirements set out in the document EOS / ESD guidelines (Guideline_EOS_ESD.pdf) at: http://www.tridonic.com/esd-protection

4. Lifetime

4.1 Lifetime, lumen maintenance and failure rate

The light output of an LED module decreases over the lifetime, this is characterized with the L value.
L70 means that the LED module will give 70 % of its initial luminous flux.
This value is always related to the number of operation hours and therefore defines the lifetime of an LED module.

As the L value is a statistical value and the lumen maintenance may vary over the delivered LED modules.
The B value defines the amount of modules which are below the specific L value, e.g. L70B10 means 10 % of the LED modules are below 70 % of the initial luminous flux, respectively 90 % will be above 70 % of the initial value.
In addition the percentage of failed modules (fatal failure) is characterized by the C value.

The F value is the combination of the B and C value. That means for F degradation and complete failures are considered, e.g. L70F10 means 10 % of the LED modules may fail or be below 70 % of the initial luminous flux.

4.2 Lumen maintenance for LLE 24mm HV ADV5

Forward current	tp tempera-ture	L90 / F10	L90 / F50	L80 / F10	L80 / F50	L70 / F10	L70 / F50
150 mA	40 °C	43,000 h	59,000 h	>72,000 h	>72,000 h	>72,000 h	>72,000 h
	45 °C	42,000 h	57,000 h	>72,000 h	>72,000 h	>72,000 h	>72,000 h
	50 °C	41,000 h	55,000 h	>72,000 h	>72,000 h	>72,000 h	>72,000 h
	55 °C	40,000 h	54,000 h	>72,000 h	>72,000 h	>72,000 h	>72,000 h
	60 °C	39,000 h	52,000 h	>72,000 h	>72,000 h	>72,000 h	>72,000 h
	65 °C	38,000 h	50,000 h	>72,000 h	>72,000 h	>72,000 h	>72,000 h
	70 °C	38,000 h	49,000 h	>72,000 h	>72,000 h	>72,000 h	>72,000 h
	75 °C	37,000 h	47,000 h	>72,000 h	>72,000 h	>72,000 h	>72,000 h
	80 °C	36,000 h	46,000 h	>72,000 h	>72,000 h	>72,000 h	>72,000 h
	85 °C	35,000 h	45,000 h	>72,000 h	>72,000 h	>72,000 h	>72,000 h
200 mA	40 °C	43,000 h	58,000 h	>72,000 h	>72,000 h	>72,000 h	>72,000 h
	45 °C	42,000 h	57,000 h	>72,000 h	>72,000 h	>72,000 h	>72,000 h
	50 °C	41,000 h	55,000 h	>72,000 h	>72,000 h	>72,000 h	>72,000 h
	55 °C	40,000 h	53,000 h	>72,000 h	>72,000 h	>72,000 h	>72,000 h
	60 °C	39,000 h	51,000 h	>72,000 h	>72,000 h	>72,000 h	>72,000 h
	65 °C	38,000 h	50,000 h	>72,000 h	>72,000 h	>72,000 h	>72,000 h
	70 °C	37,000 h	48,000 h	>72,000 h	>72,000 h	>72,000 h	>72,000 h
	75 °C	36,000 h	47,000 h	>72,000 h	>72,000 h	>72,000 h	>72,000 h
	80 °C	36,000 h	45,000 h	>72,000 h	>72,000 h	>72,000 h	>72,000 h
	85 °C	35,000 h	44,000 h	>72,000 h	>72,000 h	>72,000 h	>72,000 h
300 mA	40 °C	42,000 h	58,000 h	>72,000 h	>72,000 h	>72,000 h	>72,000 h
	45 °C	41,000 h	56,000 h	>72,000 h	>72,000 h	>72,000 h	>72,000 h
	50 °C	40,000 h	54,000 h	>72,000 h	>72,000 h	>72,000 h	>72,000 h
	55 °C	40,000 h	52,000 h	>72,000 h	>72,000 h	>72,000 h	>72,000 h
	60 °C	39,000 h	51,000 h	>72,000 h	>72,000 h	>72,000 h	>72,000 h
	65 °C	38,000 h	49,000 h	>72,000 h	>72,000 h	>72,000 h	>72,000 h
	70 °C	37,000 h	48,000 h	>72,000 h	>72,000 h	>72,000 h	>72,000 h
	75 °C	36,000 h	46,000 h	>72,000 h	>72,000 h	>72,000 h	>72,000 h
	80 °C	35,000 h	45,000 h	>72,000 h	>72,000 h	>72,000 h	>72,000 h
	85 °C	34,000 h	44,000 h	70,000 h	>72,000 h	>72,000 h	>72,000 h
375 mA	40 °C	42,000 h	57,000 h	>72,000 h	>72,000 h	>72,000 h	>72,000 h
	45 °C	41,000 h	55,000 h	>72,000 h	>72,000 h	>72,000 h	>72,000 h
	50 °C	40,000 h	54,000 h	>72,000 h	>72,000 h	>72,000 h	>72,000 h
	55 °C	39,000 h	52,000 h	>72,000 h	>72,000 h	>72,000 h	>72,000 h
	60 °C	38,000 h	50,000 h	>72,000 h	>72,000 h	>72,000 h	>72,000 h
	65 °C	37,000 h	49,000 h	>72,000 h	>72,000 h	>72,000 h	>72,000 h
	70 °C	37,000 h	47,000 h	>72,000 h	>72,000 h	>72,000 h	>72,000 h
	75 °C	36,000 h	46,000 h	>72,000 h	>72,000 h	>72,000 h	>72,000 h
	80 °C	35,000 h	44,000 h	71,000 h	>72,000 h	>72,000 h	>72,000 h
	85 °C	34,000 h	43,000 h	69,000 h	>72,000 h	>72,000 h	>72,000 h
450 mA	40 °C	42,000 h	56,000 h	>72,000 h	>72,000 h	>72,000 h	>72,000 h
	45 °C	41,000 h	55,000 h	>72,000 h	>72,000 h	>72,000 h	>72,000 h
	50 °C	40,000 h	53,000 h	>72,000 h	>72,000 h	>72,000 h	>72,000 h
	55 °C	39,000 h	51,000 h	>72,000 h	>72,000 h	>72,000 h	>72,000 h
	60 °C	38,000 h	50,000 h	>72,000 h	>72,000 h	>72,000 h	>72,000 h
	65 °C	37,000 h	48,000 h	>72,000 h	>72,000 h	>72,000 h	>72,000 h
	70 °C	36,000 h	47,000 h	>72,000 h	>72,000 h	>72,000 h	>72,000 h
	75 °C	35,000 h	45,000 h	>72,000 h	>72,000 h	>72,000 h	>72,000 h
	80 °C	35,000 h	44,000 h	70,000 h	>72,000 h	>72,000 h	>72,000 h
	85 °C	34,000 h	43,000 h	69,000 h	>72,000 h	>72,000 h	>72,000 h
500 mA	40 °C	41,000 h	56,000 h	>72,000 h	>72,000 h	>72,000 h	>72,000 h
	45 °C	40,000 h	54,000 h	>72,000 h	>72,000 h	>72,000 h	>72,000 h
	50 °C	39,000 h	52,000 h	>72,000 h	>72,000 h	>72,000 h	>72,000 h
	55 °C	38,000 h	51,000 h	>72,000 h	>72,000 h	>72,000 h	>72,000 h
	60 °C	38,000 h	49,000 h	>72,000 h	>72,000 h	>72,000 h	>72,000 h
	65 °C	37,000 h	48,000 h	>72,000 h	>72,000 h	>72,000 h	>72,000 h
	70 °C	36,000 h	46,000 h	>72,000 h	>72,000 h	>72,000 h	>72,000 h
	75 °C	35,000 h	45,000 h	71,000 h	>72,000 h	>72,000 h	>72,000 h
	80 °C	34,000 h	43,000 h	70,000 h	>72,000 h	>72,000 h	>72,000 h
	85 °C	34,000 h	42,000 h	68,000 h	>72,000 h	>72,000 h	>72,000 h

4.3 Switching capability

100,000 cycles

Tridonic test according to IEC 62717 Cl 10.3.3
30 s on / 30 s off at Imax

5. Electrical values

5.1 Declaration of electrical parameters

Irated ... Nominal operating current the module is designed for.

Imax ... Max. permissible continuous operating current incl. The tolerances of the LED driver.

Max. permissible LF current ripple ... Max. output current of the LED driver incl. Tolerances and LF current ripple must not exceed this value.

Max. permissible peak current ... The max. output peak current of the LED driver must not exceed this value.

5.2 Typ. forward voltage vs. forward current

LLE 24x70mm 325lm 8xx HV ADV5

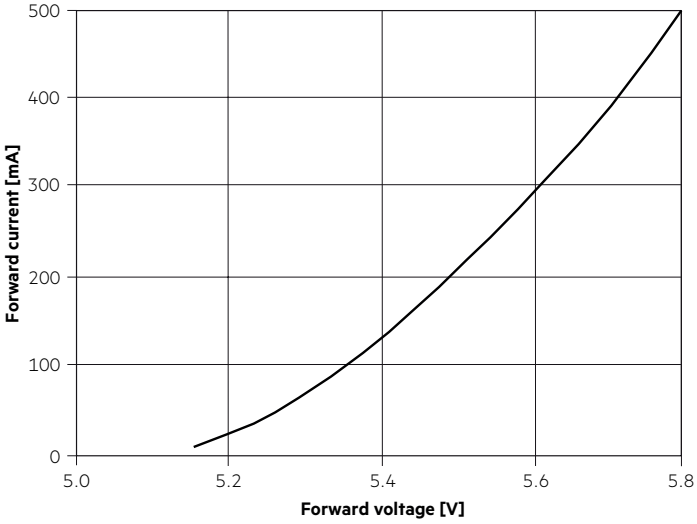

LLE 24x140mm 650lm 8xx HV ADV5

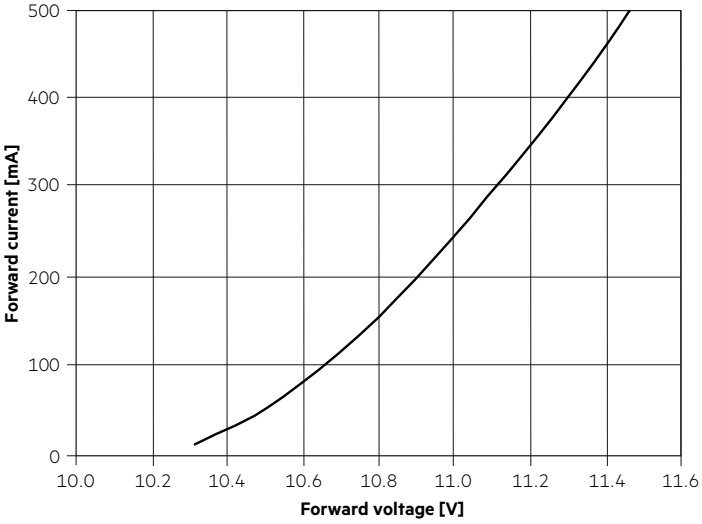

LLE 24x280mm 1250lm 8xx HV ADV5

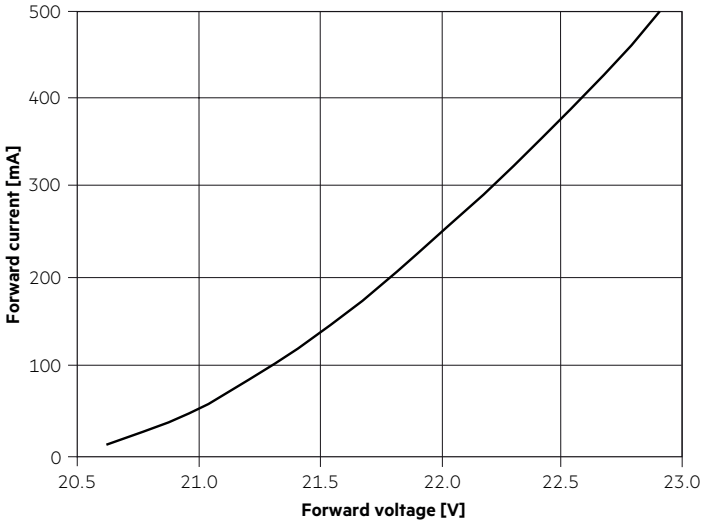

LLE 24x560mm 2400lm 8xx HV ADV5

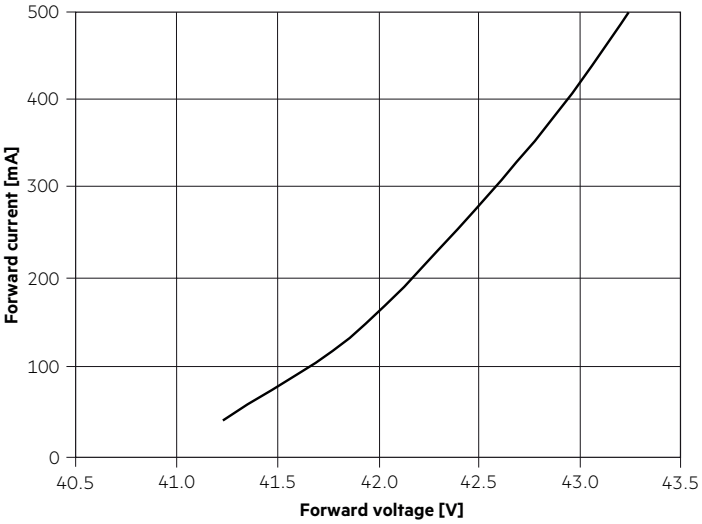

The diagrams are based on statistic values.
The real values can be different.

5.3 Forward voltage vs. tc temperature

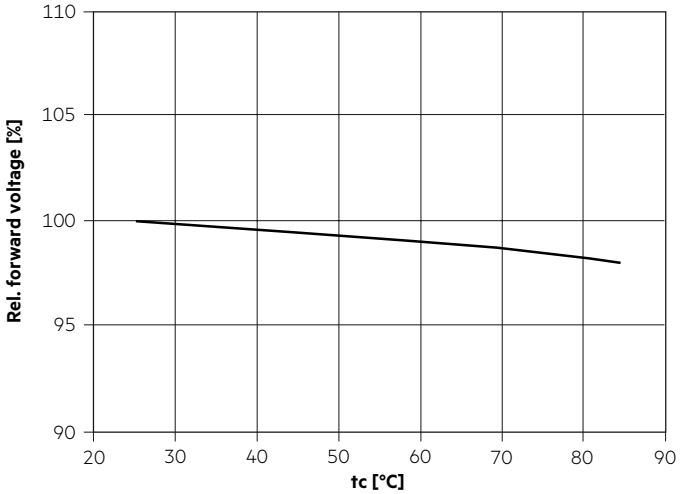

The diagrams are based on statistic values.
The real values can be different.

6. Photometric characteristics

6.1 Coordinates and tolerances according to CIE 1931

The specified colour coordinates are integral measured by current impulse of 195 mA and a duration of 100 ms.
The ambient temperature of the measurement is ta = 25 °C.
The measurement tolerance of the colour coordinates are ± 0.01.

2,700 K

	x0	y0
Centre	0.4578	0.4101

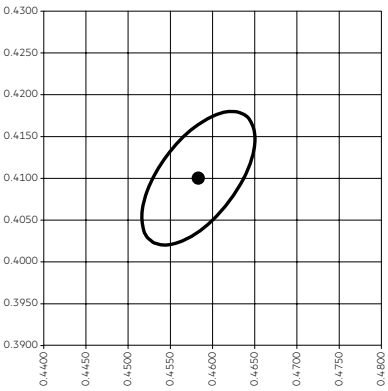

MacAdam Ellipse: 3SDCM

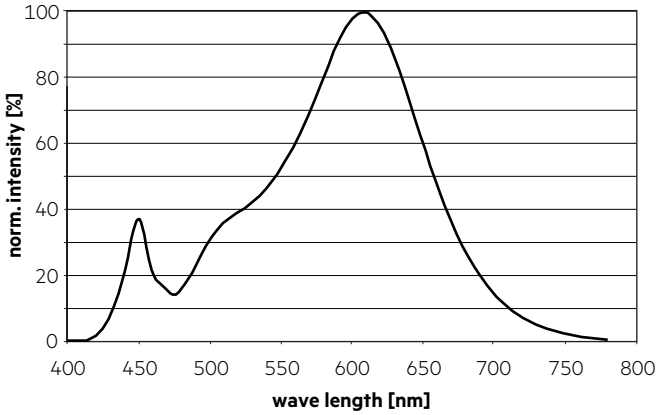

3,000 K

	x0	y0
Centre	0.4338	0.4030

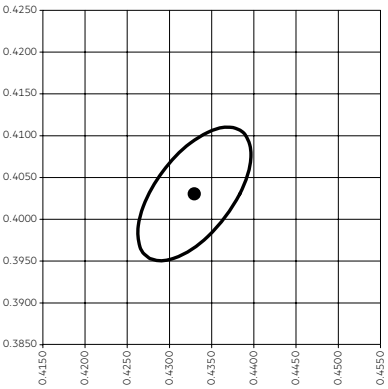

MacAdam Ellipse: 3SDCM

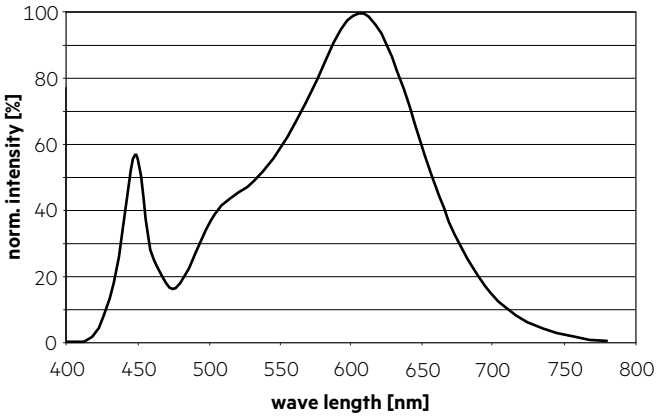

3,500 K

	x0	y0
Centre	0.4073	0.3917

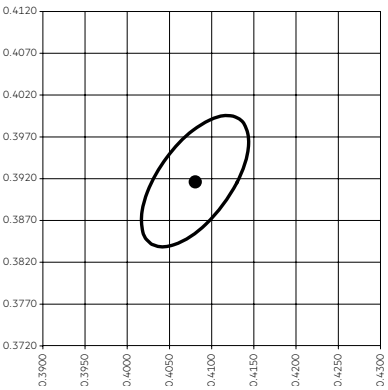

MacAdam Ellipse: 3SDCM

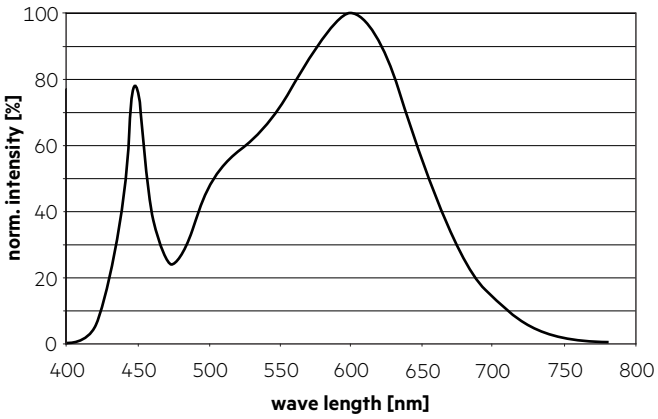

4,000 K

	x0	y0
Center	0.3818	0.3797

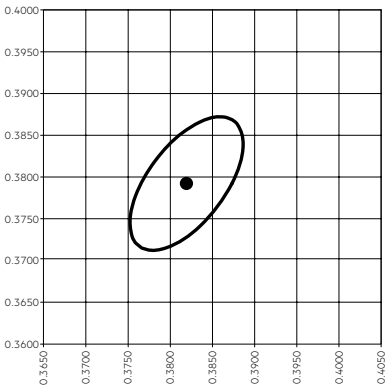

MacAdam Ellipse: 3SDCM

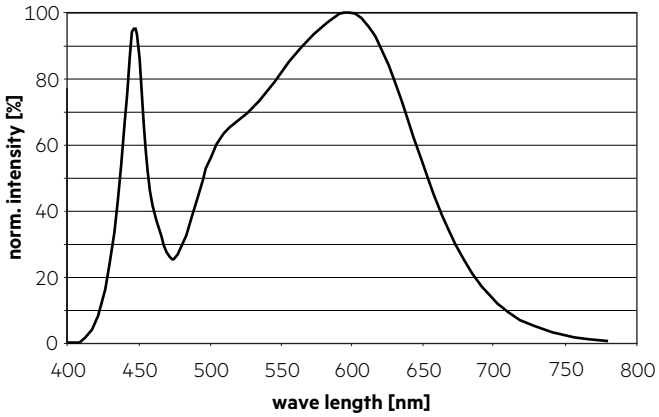

5,000 K

	x0	y0
Center	0.3447	0.3553

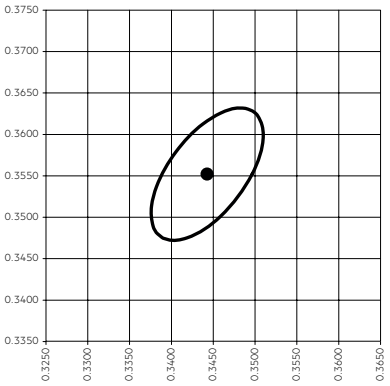

MacAdam Ellipse: 3SDCM

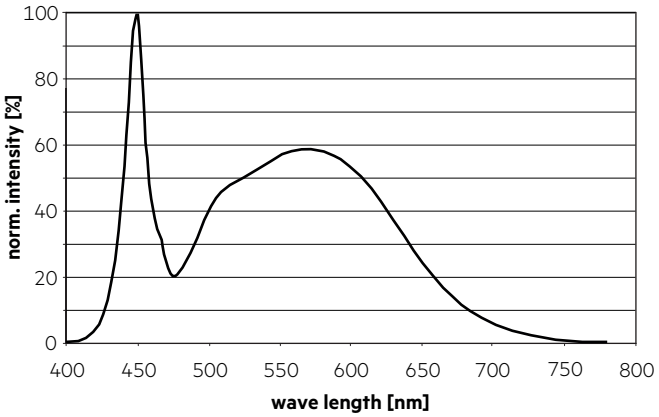

6,500 K

	x0	y0
Center	0.3123	0.3282

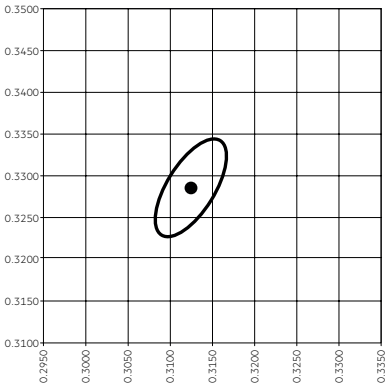

MacAdam Ellipse: 3SDCM

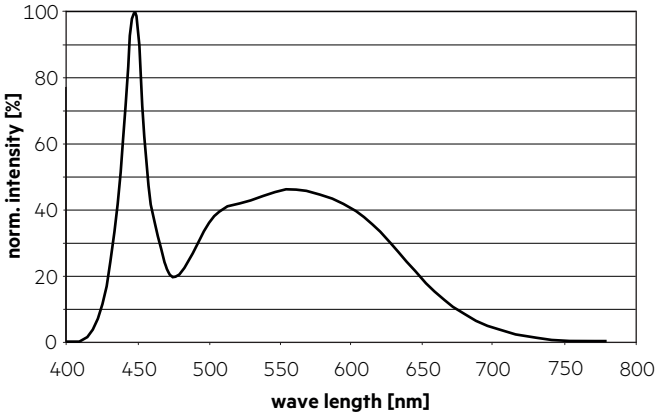

6.2 Light distribution

The optical design of the LLE product line ensures optimum homogeneity for the light distribution.

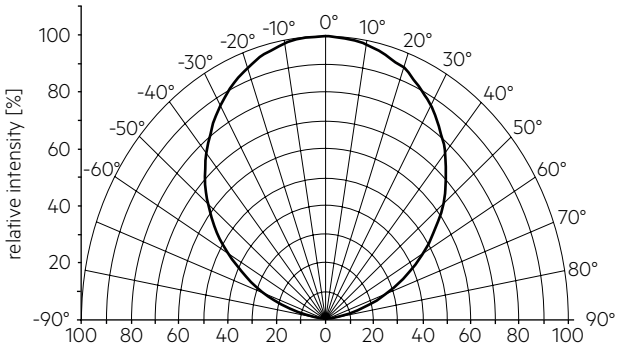

The colour temperature is measured integral over the complete module. The single LED light points can have deviations in the colour coordinates within MacAdam 5.
To ensure an ideal mixture of colours and a homogeneous light distribution a suitable optic (e. g. PMMA diffuser) and a sufficient spacing between module and optic (typ. 4 cm) should be used.

6.3 Relative luminous flux vs. tc temperature

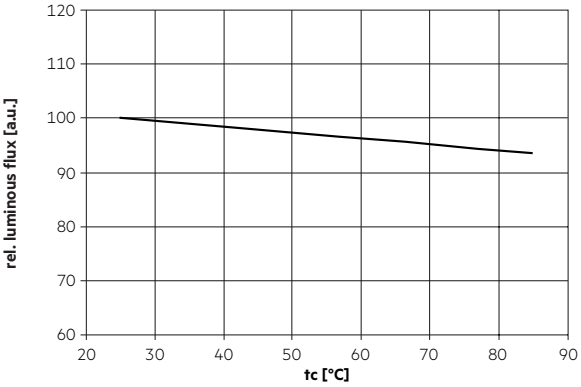

6.4 Relative luminous flux vs. operating current

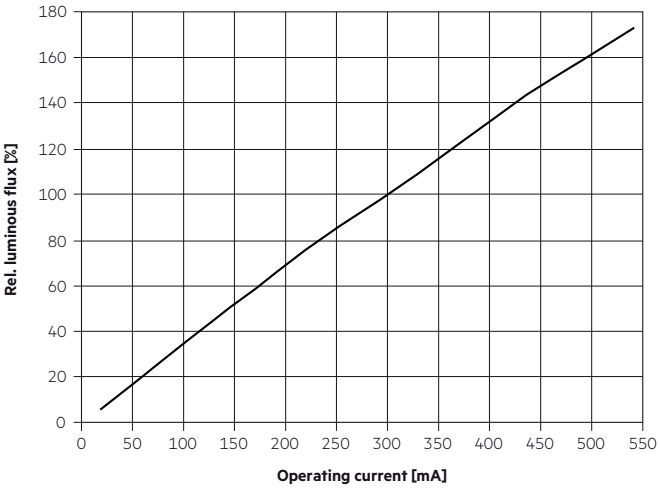

The diagrams are based on statistic values.
The real values can be different.

7. Miscellaneous

7.1 Additional information

Additional technical information at www.tridonic.com → Technical Data

Guarantee conditions at www.tridonic.com → Services

Lifetime declarations are informative and represent no warranty claim.