R79GC3220CK40J

Aliases (79GC3220CK40J)

Not for New Design

R79, Film, Metallized Polypropylene, General Purpose, 0.22 uF, 5%, 160 VDC, 85°C, 5 mm

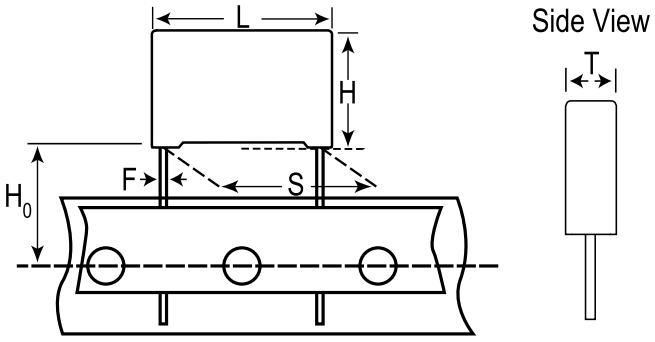

Click here for the 3D model.

General Information	
Series	R79
Dielectric	Metallized Polypropylene
Style	Radial
Features	Pulse
RoHS	Yes
Termination	Tinned Wire
Lead	Wire Leads
Typical Component Weight	1.08 g
Miscellaneous	Above 85C DC And AC Voltage Derating Is 1.25%/C.
Notes	Series Replaced by R75.

Dimensions	
L	7.2mm +0.3/-0.5mm
H	13mm +0.1/-0.5mm
T	7.2mm +0.1/-0.5mm
S	5mm +0.6/-0.1mm
H0	18.5mm +/-0.5mm
F	0.5mm +/-0.05mm

Packaging Specifications	
Packaging	T&R
Packaging Quantity	800

Specifications	
Capacitance	0.22 uF
Tolerance	5%
Voltage DC	160 VDC
Voltage AC	70 VAC
Temperature Range	-55/+105°C
Rated Temperature	85°C
Dissipation Factor	0.06% 1kHz, 0.1% 10kHz
Insulation Resistance	100 GOhms
Max dV/dt	100 V/us
Inductance	6 nH

Statements of suitability for certain applications are based on our knowledge of typical operating conditions for such applications, but are not intended to constitute - and we specifically disclaim - any warranty concerning suitability for a specific customer application or use. This Information is intended for use only by customers who have the requisite experience and capability to determine the correct products for their application. Any technical advice inferred from this Information or otherwise provided by us with reference to the use of our products is given gratis, and we assume no obligation or liability for the advice given or results obtained.

© 2006 - 2026 YAGEO