Data Sheet | Item Number: 734-464/037-000

THT female header; straight; Pin spacing 3.5 mm; 4-pole; 100% protected against mismating; Locking lever; 0.9 x 0.9 mm solder pin; light gray

https://www.wago.com/734-464/037-000



Color: light gray

Similar to illustration

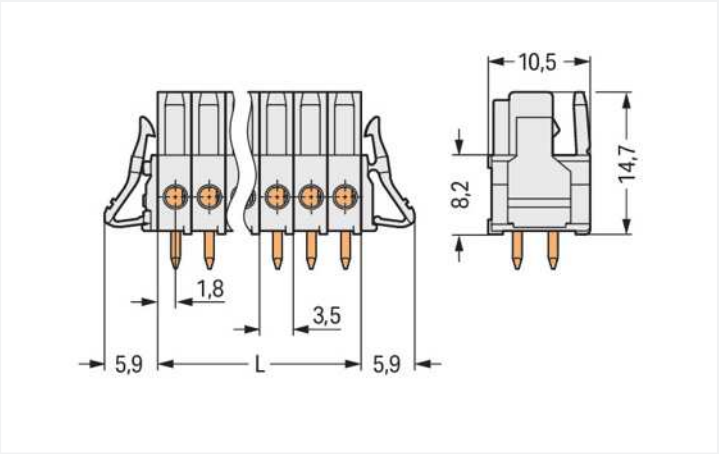

Dimensions in mm
L = pole no. x pin spacing

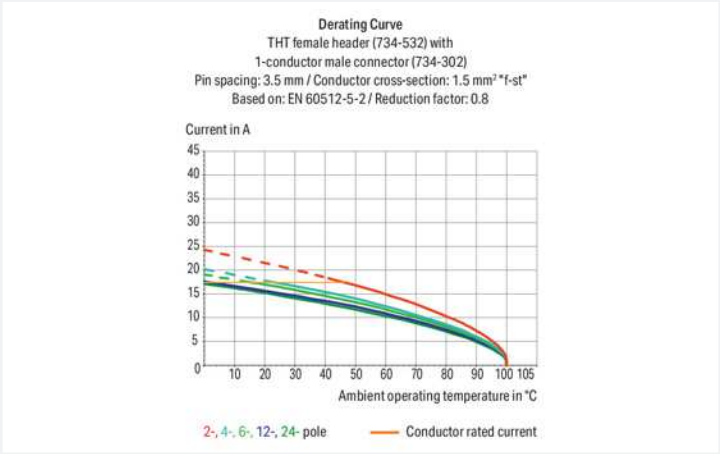

- Horizontal or vertical PCB mounting via straight or angled solder pins
- Integrated test ports for 2 mm Ø test plugs
- For board-to-board and board-to-wire connections
- Touch-proof PCB outputs
- Easy-to-identify inputs and outputs
- 100% protected against mismating
- Coding option available

Notes

Safety information	The *MCS – MULTI CONNECTION SYSTEM* includes connectors without breaking capacity in accordance with DIN EN 61984. When used as intended, these connectors must not be connected/disconnected when live or under load.When used as intended, these connectors must not be connected/disconnected when live or under load. The circuit design should ensure header pins, which can be touched, are not live when unmated.
Variants:	Other pole numbers Gold-plated or partially gold-plated contact surfaces Other versions (or variants) can be requested from WAGO Sales or configured at https://configurator.wago.com/.

Electrical data

Ratings per	IEC/EN 60664-1		
Overvoltage category	III	III	II
Pollution degree	3	2	2
Nominal voltage	160 V	160 V	320 V
Rated surge voltage	2.5 kV	2.5 kV	2.5 kV
Rated current	10 A	10 A	10 A

Approvals per	UL 1059		
Use group	B	C	D
Rated voltage	300 V	-	300 V
Rated current	10 A	-	10 A

Approvals per	CSA		
Use group	B	C	D
Rated voltage	300 V	-	300 V
Rated current	10 A	-	10 A

Connection data

Connection points	4
Total number of potentials	4
Number of connection types	1
Number of levels	1

Connection 1

Pole number	4

Physical data

Pin spacing	3.5 mm / 0.138 inches
Width	25.8 mm / 1.016 inches
Height	18.5 mm / 0.728 inches
Height from the surface	14.7 mm / 0.579 inches
Depth	10.5 mm / 0.413 inches
Solder pin length	3.8 mm
Solder pin dimensions	0.9 x 0.9 mm
Drilled hole diameter with tolerance	1.4 $^{(+0.1)}$ mm

Mechanical data

Variable coding	Yes
Anti-rotation protection	Yes

Plug-in connection

Contact type (pluggable connector)	Female connector/socket
Connector (connection type)	for PCB
Mismating protection	Yes
Mating direction to the PCB	90 °
Locking of plug-in connection	Locking lever

PCB contact

PCB contact	THT
Solder pin arrangement	over the entire female connector (in-line)
Number of solder pins per potential	1

Continued on next page

Material data

Note (material data)	Information on material specifications can be found here
Color	light gray
Material group	I
Insulation material	Polyamide (PA66)
Flammability class per UL94	V0
Contact material	Copper alloy
Contact plating	Tin
Fire load	0.016 MJ
Weight	2.5 g

Environmental requirements

Limit temperature range	-60 … +100 °C
Processing temperature	-35 … +60 °C

Commercial data

Product Group	3 (Multi Conn. System)
eCl@ss 10.0	27-44-04-02
eCl@ss 9.0	27-44-04-02
ETIM 8.0	EC002637
ETIM 7.0	EC002637
PU (SPU)	100 pcs
Packaging type	Box
Country of origin	DE
GTIN	4045454000134
Customs tariff number	85366990990

Environmental Product Compliance

RoHS Compliance Status	Compliant,No Exemption

Approvals / Certificates

General approvals

Approval	Standard	Certificate Name
CB DEKRA Certification B.V.	EN 61984	NL-54190
CSA DEKRA Certification B.V.	C22.2	1465035
KEMA/KEUR DEKRA Certification B.V.	EN 61984	71-105522
UL Underwriters Laboratories Inc.	UL 1977	E 45171
UR Underwriters Laboratories Inc.	UL 1059	E45172

Approvals for marine applications

Approval	Standard	Certificate Name
DNV DNV GL SE	-	TAE000016Z

Downloads

Environmental Product Compliance

Compliance Search

Environmental Product Compliance
734-464/037-000

Documentation

Additional Information

Technical Section	03.04.2019	pdf 2010.85 KB

CAD/CAE-Data

CAD data

2D/3D Models
734-464/037-000

CAE data

EPLAN Data Portal
734-464/037-000

ZUKEN Portal
734-464/037-000