# Data Sheet | Item Number: 734-107/107-000

1-conductor female connector; CAGE CLAMP®; 1.5 mm²; Pin spacing 3.5 mm; 7-pole; 100% protected against mismating; Screw flange; 1,50 mm²; light gray

https://www.wago.com/734-107/107-000



Color: light gray

Similar to illustration

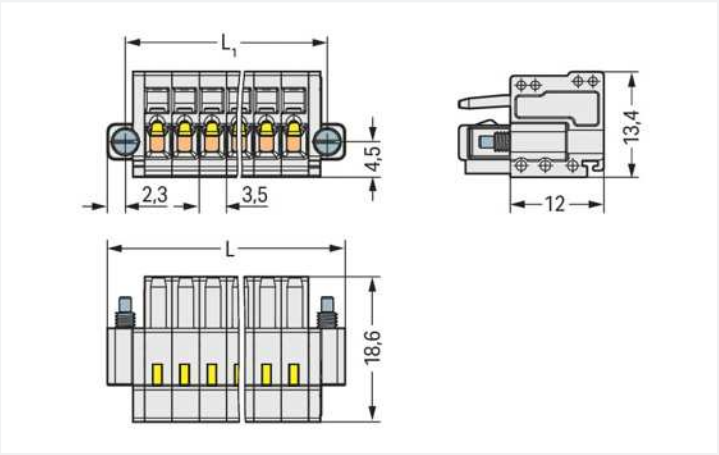


Dimensions in mm

L = (pole no. x pin spacing) + 9.5 mm

L1 = (pole no. x pin spacing) + 4.9 mm

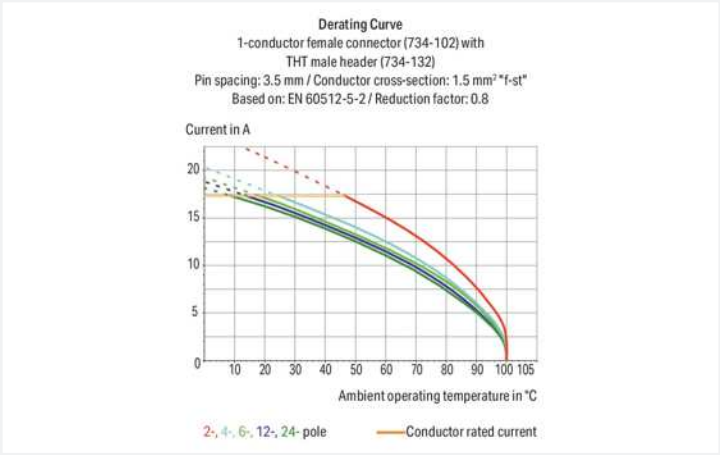


- Universal connection for all conductor types
- Easy cable pre-assembly and on-unit wiring via vertical and horizontal CAGE CLAMP® actuation
- Strain relief plates and housings for field assembly
- 100% protected against mismating
- Coding option available

## Notes

| | |
|---|---|
| Safety information | The *MCS – MULTI CONNECTION SYSTEM* includes connectors without breaking capacity in accordance with DIN EN 61984. When used as intended, these connectors must not be connected/disconnected when live or under load.When used as intended, these connectors must not be connected/disconnected when live or under load. The circuit design should ensure header pins, which can be touched, are not live when unmated. |
| Variants: | Other pole numbers<br>Gold-plated or partially gold-plated contact surfaces<br>Other versions (or variants) can be requested from WAGO Sales or configured at https://configurator.wago.com/. |

## Electrical data

| Ratings per | IEC/EN 60664-1 | | |
|---|---|---|---|
| Overvoltage category | III | III | II |
| Pollution degree | 3 | 2 | 2 |
| Nominal voltage | 160 V | 160 V | 320 V |
| Rated surge voltage | 2.5 kV | 2.5 kV | 2.5 kV |
| Rated current | 10 A | 10 A | 10 A |

| Approvals per | CSA | | |
|---|---|---|---|
| Use group | B | C | D |
| Rated voltage | 300 V | - | 300 V |
| Rated current | 10 A | - | 10 A |

| Approvals per | UL 1059 | | |
|---|---|---|---|
| Use group | B | C | D |
| Rated voltage | 300 V | - | 300 V |
| Rated current | 10 A | - | 10 A |

## Connection data

| | |
|---|---|
| Connection points | 7 |
| Total number of potentials | 7 |
| Number of connection types | 1 |
| Number of levels | 1 |

### Connection 1

| | |
|---|---|
| Connection technology | CAGE CLAMP® |
| Actuation type | Operating tool |
| Actuation direction 1 | Operation parallel to conductor entry |
| Actuation direction 2 | Operation perpendicular to conductor entry |
| Solid conductor | 0.08 … 1.5 mm² / 28 … 14 AWG |
| Fine-stranded conductor | 0.08 … 1.5 mm² / 28 … 14 AWG |
| Fine-stranded conductor; with insulated ferrule | 0.25 … 1.5 mm² |
| Fine-stranded conductor; with uninsulated ferrule | 0.25 … 1.5 mm² |
| Note (conductor cross-section) | Terminating 1.5 mm² conductors is possible; however insulation diameter does not allow clamping units to be terminated in a row. |
| Strip length | 6 … 7 mm / 0.24 … 0.28 inches |
| Pole number | 7 |
| Conductor entry direction to mating direction | 0 ° |

## Physical data

| | |
|---|---|
| Pin spacing | 3.5 mm / 0.138 inches |
| Width | 34 mm / 1.339 inches |
| Height | 13.4 mm / 0.528 inches |
| Depth | 18.6 mm / 0.732 inches |

## Mechanical data

| | |
|---|---|
| Variable coding | Yes |
| Anti-rotation protection | Yes |

## Plug-in connection

| | |
|---|---|
| Contact type (pluggable connector) | Female connector/socket |
| Connector (connection type) | for conductor |
| Mismating protection | Yes |
| Locking of plug-in connection | Screw flange |


Continued on next page

## Material data

| | |
|---|---|
| Note (material data) | <a href="https://www.wago.com/us/material-specifications" href="_blank">Information on material specifications can be found here</a> |
| Color | light gray |
| Material group | I |
| Insulation material | Polyamide (PA66) |
| Flammability class per UL94 | V0 |
| Clamping spring material | Chrome-nickel spring steel (CrNi) |
| Contact material | Copper alloy |
| Contact plating | Tin |
| Fire load | 0.095 MJ |
| Weight | 6.2 g |

## Environmental requirements

| | |
|---|---|
| Limit temperature range | -60 … +100 °C |
| Processing temperature | -35 … +60 °C |

## Commercial data

| | |
|---|---|
| Product Group | 3 (Multi Conn. System) |
| eCl@ss 10.0 | 27-44-03-09 |
| eCl@ss 9.0 | 27-44-03-09 |
| ETIM 8.0 | EC002638 |
| ETIM 7.0 | EC002638 |
| PU (SPU) | 50 pcs |
| Packaging type | Box |
| Country of origin | DE |
| GTIN | 4045454758646 |
| Customs tariff number | 85366990990 |

## Environmental Product Compliance

| | |
|---|---|
| RoHS Compliance Status | Compliant,No Exemption |

## Approvals / Certificates

### General approvals

| Approval | Standard | Certificate Name |
|---|---|---|
| CB<br>DEKRA Certification B.V. | EN 61984 | NL-54190 |
| CSA<br>DEKRA Certification B.V. | C22.2 | 1465035 |
| KEMA/KEUR<br>DEKRA Certification B.V. | EN 61984 | 71-105522 |
| UL<br>Underwriters Laboratories Inc. | UL 1977 | E 45171 |
| UR<br>Underwriters Laboratories Inc. | UL 1059 | E45172 |

### Declarations of conformity and manufacturer's declarations

| Approval | Standard | Certificate Name |
|---|---|---|
| Railway<br>WAGO GmbH & Co. KG | - | Railway Ready |

 Continued on next page

## Approvals for marine applications

| Approval | Standard | Certificate Name |
|---|---|---|
| BV<br>Bureau Veritas S.A. | IEC 60998 | 11915/D0 BV |
| DNV GL<br>Det Norske Veritas, Germanischer Lloyd | - | TAE000016Z |

## Downloads

### Environmental Product Compliance

**Compliance Search**

Environmental Product Compliance
734-107/107-000

### Documentation

**Additional Information**

| | | |
|---|---|---|
| Technical Section | 03.04.2019 | pdf<br>1949.09 KB |

### CAD/CAE-Data

**CAD data**

2D/3D Models
734-107/107-000

**CAE data**

ZUKEN Portal
734-107/107-000

## 1 Compatible Products

### 1.1 System counterpart

#### 1.1.1 Male connector/plug



Item No.: 734-307/109-000
1-conductor male connector; CAGE CLAMP®; 1.5 mm²; Pin spacing 3.5 mm; 7-pole; 100% protected against mismating; Threaded flange; 1,50 mm²; light gray



Item No.: 734-167/108-000
THT male header; 1.0 x 1.0 mm solder pin; angled; 100% protected against mismating; Threaded flange; Pin spacing 3.5 mm; 7-pole; light gray



Item No.: 734-137/108-000
THT male header; 1.0 x 1.0 mm solder pin; straight; 100% protected against mismating; Threaded flange; Pin spacing 3.5 mm; 7-pole; light gray

### 1.2 Optional Accessories

#### 1.2.1 Ferrule

 Continued on next page

### 1.2.1.1 Ferrule



Item No.: 216-301
Ferrule; Sleeve for 0.25 mm² / AWG 24; insulated; electro-tin plated; yellow



Item No.: 216-321
Ferrule; Sleeve for 0.25 mm² / AWG 24; insulated; electro-tin plated; yellow



Item No.: 216-151
Ferrule; Sleeve for 0.25 mm² / AWG 24; uninsulated; electro-tin plated



Item No.: 216-131
Ferrule; Sleeve for 0.25 mm² / AWG 24; uninsulated; electro-tin plated; silver-colored



Item No.: 216-302
Ferrule; Sleeve for 0.34 mm² / 22 AWG; insulated; electro-tin plated; light turquoise



Item No.: 216-322
Ferrule; Sleeve for 0.34 mm² / 22 AWG; insulated; electro-tin plated; light turquoise



Item No.: 216-132
Ferrule; Sleeve for 0.34 mm² / AWG 24; uninsulated; electro-tin plated



Item No.: 216-152
Ferrule; Sleeve for 0.34 mm² / AWG 24; uninsulated; electro-tin plated



Item No.: 216-241
Ferrule; Sleeve for 0.5 mm² / 20 AWG; insulated; electro-tin plated; electrolytic copper; gastight crimped; acc. to DIN 46228, Part 4/09.90; white



Item No.: 216-201
Ferrule; Sleeve for 0.5 mm² / 20 AWG; insulated; electro-tin plated; white



Item No.: 216-221
Ferrule; Sleeve for 0.5 mm² / 20 AWG; insulated; electro-tin plated; white



Item No.: 216-141
Ferrule; Sleeve for 0.5 mm² / 20 AWG; uninsulated; electro-tin plated; electrolytic copper; gastight crimped; acc. to DIN 46228, Part 1/08.92



Item No.: 216-101
Ferrule; Sleeve for 0.5 mm² / AWG 22; uninsulated; electro-tin plated; silver-colored



Item No.: 216-121
Ferrule; Sleeve for 0.5 mm² / AWG 22; uninsulated; electro-tin plated; silver-colored



Item No.: 216-242
Ferrule; Sleeve for 0.75 mm² / 18 AWG; insulated; electro-tin plated; electrolytic copper; gastight crimped; acc. to DIN 46228, Part 4/09.90; gray



Item No.: 216-262
Ferrule; Sleeve for 0.75 mm² / 18 AWG; insulated; electro-tin plated; electrolytic copper; gastight crimped; acc. to DIN 46228, Part 4/09.90; gray



Item No.: 216-202
Ferrule; Sleeve for 0.75 mm² / 18 AWG; insulated; electro-tin plated; gray



Item No.: 216-222
Ferrule; Sleeve for 0.75 mm² / 18 AWG; insulated; electro-tin plated; gray



Item No.: 216-142
Ferrule; Sleeve for 0.75 mm² / 18 AWG; uninsulated; electro-tin plated; electrolytic copper; gastight crimped; acc. to DIN 46228, Part 1/08.92



Item No.: 216-102
Ferrule; Sleeve for 0.75 mm² / AWG 20; uninsulated; electro-tin plated; silver-colored



Item No.: 216-122
Ferrule; Sleeve for 0.75 mm² / AWG 20; uninsulated; electro-tin plated; silver-colored



Item No.: 216-243
Ferrule; Sleeve for 1 mm² / AWG 18; insulated; electro-tin plated; electrolytic copper; gastight crimped; acc. to DIN 46228, Part 4/09.90; red



Item No.: 216-263
Ferrule; Sleeve for 1 mm² / AWG 18; insulated; electro-tin plated; electrolytic copper; gastight crimped; acc. to DIN 46228, Part 4/09.90; red



Item No.: 216-203
Ferrule; Sleeve for 1 mm² / AWG 18; insulated; electro-tin plated; red



Item No.: 216-223
Ferrule; Sleeve for 1 mm² / AWG 18; insulated; electro-tin plated; red



Item No.: 216-103
Ferrule; Sleeve for 1 mm² / AWG 18; uninsulated; electro-tin plated



Item No.: 216-143
Ferrule; Sleeve for 1 mm² / AWG 18; uninsulated; electro-tin plated; electrolytic copper; gastight crimped; acc. to DIN 46228, Part 1/08.92



Item No.: 216-123
Ferrule; Sleeve for 1 mm² / AWG 18; uninsulated; electro-tin plated; silver-colored



Item No.: 216-204
Ferrule; Sleeve for 1.5 mm² / AWG 16; insulated; electro-tin plated; black



Item No.: 216-224
Ferrule; Sleeve for 1.5 mm² / AWG 16; insulated; electro-tin plated; black



Item No.: 216-244
Ferrule; Sleeve for 1.5 mm² / AWG 16; insulated; electro-tin plated; electrolytic copper; gastight crimped; acc. to DIN 46228, Part 4/09.90; black



Item No.: 216-264
Ferrule; Sleeve for 1.5 mm² / AWG 16; insulated; electro-tin plated; electrolytic copper; gastight crimped; acc. to DIN 46228, Part 4/09.90; black



Item No.: 216-284
Ferrule; Sleeve for 1.5 mm² / AWG 16; insulated; electro-tin plated; electrolytic copper; gastight crimped; acc. to DIN 46228, Part 4/09.90; black



Item No.: 216-124
Ferrule; Sleeve for 1.5 mm² / AWG 16; uninsulated; electro-tin plated



Item No.: 216-144
Ferrule; Sleeve for 1.5 mm² / AWG 16; uninsulated; electro-tin plated; electrolytic copper; gastight crimped; acc. to DIN 46228, Part 1/08.92; silver-colored



Item No.: 216-104
Ferrule; Sleeve for 1.5 mm² / AWG 16; uninsulated; electro-tin plated; silver-colored

### 1.2.2 Insulation stop

### 1.2.2.1 Insulation stop



Item No.: 734-671
Insulation stop; 0.08 - 0.2 mm² "s" (0.14 mm² "f-st"); 8 pieces/strip; light gray

## 1.2.3 Marking

### 1.2.3.1 Marking strip



Item No.: 210-332/350-202
Marking strips; as a DIN A4 sheet; MARKED; 1-16 (240x); Height of marker strip: 3 mm; Strip length 182 mm; Horizontal marking; Self-adhesive; white



Item No.: 210-332/350-204
Marking strips; as a DIN A4 sheet; MARKED; 17-32 (240x); Height of marker strip: 3 mm; Strip length 182 mm; Horizontal marking; Self-adhesive; white



Item No.: 210-332/350-206
Marking strips; as a DIN A4 sheet; MARKED; 33-48 (240x); Height of marker strip: 3 mm; Strip length 182 mm; Horizontal marking; Self-adhesive; white

## 1.2.4 Strain relief

### 1.2.4.1 Strain relief plate



Item No.: 734-128
Strain relief plate; for female and male connectors; 12.5 mm wide; 1 part; Pin spacing 3.5 mm; light gray

## 1.2.5 Test and measurement

### 1.2.5.1 Testing accessories



Item No.: 735-500
WAGO Test pin; 1 mm Ø; 30 V AC / 60 V DC; CAT0; 1 A; 6 mm uninsulated; Test lead for soldering up to 0,5mm²

## 1.2.6 Tool

### 1.2.6.1 Operating tool



Item No.: 734-190
Combination operating tool; natural



Item No.: 734-231
Operating tool; black



Item No.: 210-719
Operating tool; Blade: 2.5 x 0.4 mm; with a partially insulated shaft



Item No.: 210-647
Operating tool; Blade: 2.5 x 0.4 mm; with a partially insulated shaft; multicoloured



Item No.: 210-251
Operating tool; for MCS MICRO and MINI with CAGE CLAMP® connection; yellow



Item No.: 210-250
Operating tool; for MCS MINI and MIDI with CAGE CLAMP® connection; red



Item No.: 734-191
Operating tool; made of insulating material; 1-way; loose; black



Item No.: 734-230
Operating tool; made of insulating material; 1-way; white

### 1.2.6.2 Strain relief housing



Item No.: 734-607
Strain relief housing; for female and male connectors; 2 parts; Pin spacing 3.5 mm; 7-pole; light gray

## Installation Notes

### Conductor termination



Inserting a conductor via (2.5 x 0.4) mm screwdriver – CAGE CLAMP® actuation perpendicular to conductor entry.



Inserting a conductor via (2.5 x 0.4) mm screwdriver – CAGE CLAMP® actuation parallel to conductor entry.

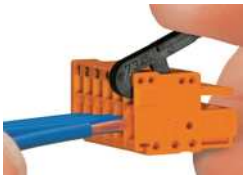

Inserting a conductor into CAGE CLAMP® unit via operating tool (734-191).

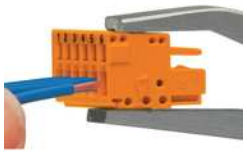

Inserting a conductor into CAGE CLAMP® unit via operating tool (210-251 or 210-250).

### Coding

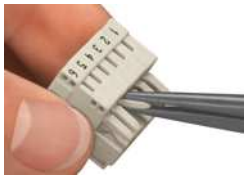

Coding a female connector – removing coding finger(s).

### Testing

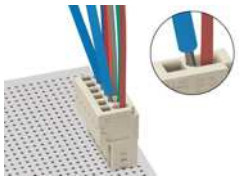

Testing via 1 mm Ø test pin (735-500) – CAGE CLAMP® connection – touch contact.

### Marking



Labeling via direct marking or self-adhesive strips.

## Installation



Strain relief housing for 734 Series Male and Female Connectors with CAGE CLAMP® connection