SERIES 71

.5-.75" Diameter, 1/4 Amp

FEATURES

- Performance and Value Leader
- Molded-In Position Terminals
- Choice of Shaft/Bushing Diameters
- 30° and 36° Angles of Throw
- Military Qualified MIL-DTL-3786/39



DIMENSIONS: Standard and Military in inches (and millimeters)

0.125" Diameter Shaft–Styles A and MA (and sealed versions)

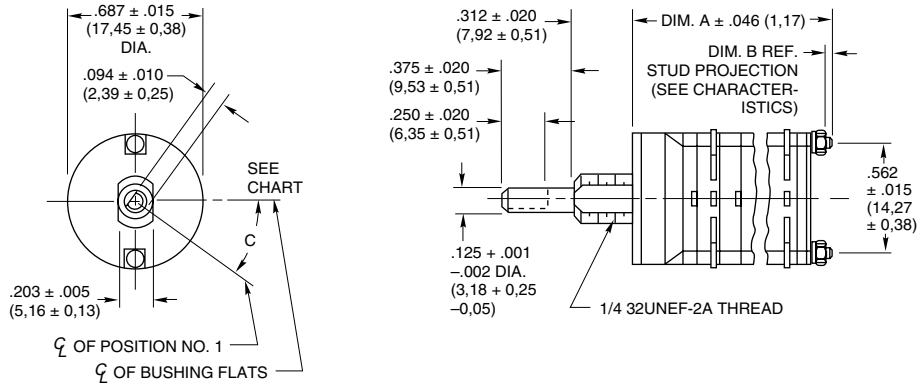

0.250" Diameter Shaft–Styles B and MB (and sealed versions)

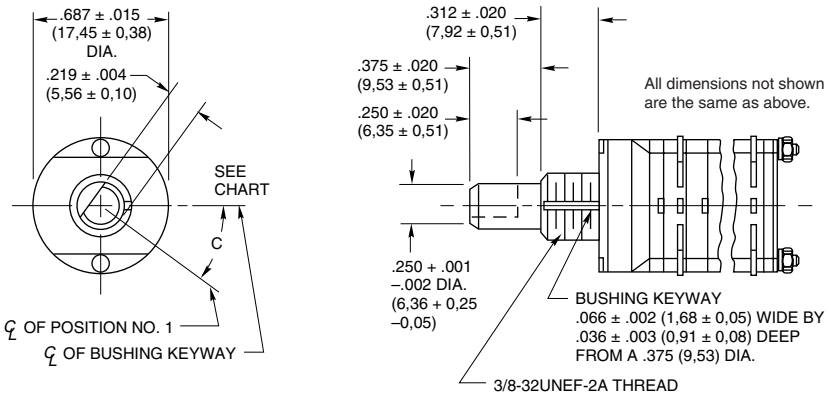

No. of Decks	Dimension A	Dimension B	Approx. Weight Grams	No. of Decks	Dimension A	Dimension B	Approx. Weight Grams
1	.761 (19,33)	.031 (0,79)	14	7	2.349 (59,66)	.312 (7,92)	26
2	.979 (24,87)	.031 (0,79)	16	8	2.567 (65,20)	.312 (7,92)	28
3	1.197 (30,40)	.031 (0,79)	18	9	2.785 (70,74)	.312 (7,92)	30
4	1.415 (35,94)	.031 (0,79)	20	10	3.003 (76,28)	.312 (7,92)	32
5	1.633 (41,48)	.031 (0,79)	22	11	3.221 (81,81)	.312 (7,92)	34
6	2.131 (54,13)	.312 (7,92)	24	12	3.439 (87,35)	.312 (7,92)	36

Angle C is 15° in 12 position switches and 36 ° in 10 position switches.

Grayhill part number and date code marked on detent cover label. Customer part number marked on request. Military part number marked when required.

Rear Views–Style A, B, MA, MB (and sealed versions)

30° and 36° Angle of Throw may be interposed on either shaft diameter.

30° Angle of Throw

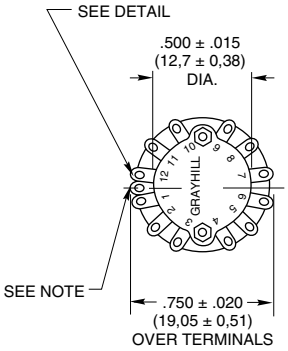

36° Angle of Throw

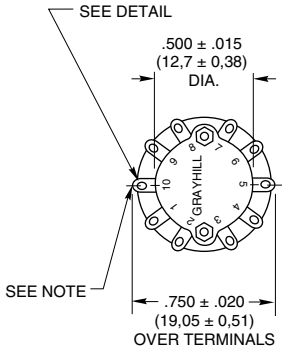

Note: Common location for a single pole per deck switch. For common location on multipole switches see circuit diagrams.

Terminal Detail

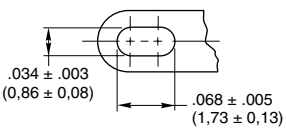

DIMENSIONS: Metric All dimensions are in millimeters

4mm Diameter Shaft–Style E and ES

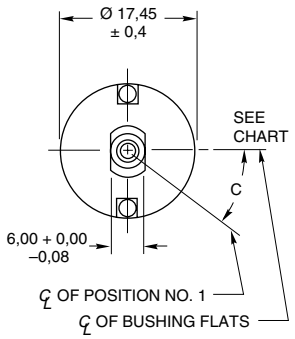

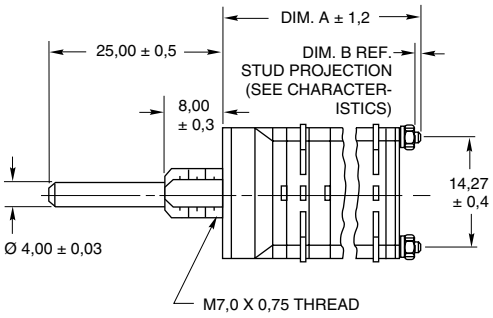

Rear Views

30° Angle of Throw

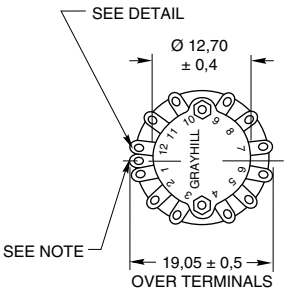

No. of Decks	Dim. A	Dim. B	Approx. Weight Grams
1	19,33	0,79	12
2	24,87	0,79	14
3	30,40	0,79	16
4	35,94	0,79	18
5	41,48	0,79	20
6	54,13	7,92	22
7	59,66	7,92	24
8	65,20	7,92	26
9	70,74	7,92	28
10	76,28	7,92	30
11	81,81	7,92	32
12	87,35	7,92	34

Angle C is 15° in 12 position switches and 36° in 10 position switches.

Terminal Detail

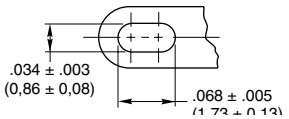

36° Angle of Throw

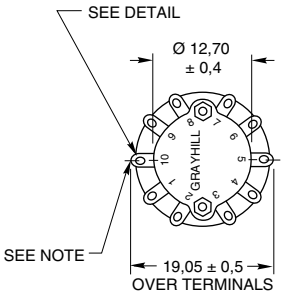

Note: Common location for a single pole per deck switch. For common location on multipole switches see circuit diagrams.

Grayhill part number and date code marked on detent cover label. Customer part number marked on request.

CIRCUIT DIAGRAMS: Standard, Military and Metric

Switch is Viewed From Shaft End and Shown in Position No. 1.
Note: All common terminals are located above base terminals as shown.

30° Angle of Throw

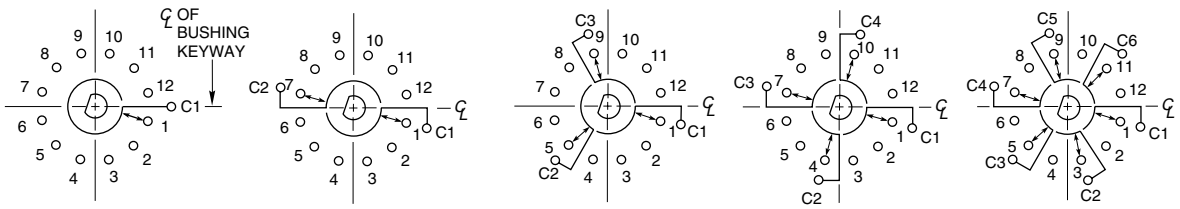

ONE POLE | TWO POLE | THREE POLE | FOUR POLE | FIVE OR SIX POLE

36° Angle of Throw

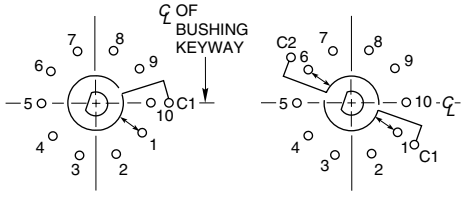

ONE POLE | TWO POLE

SERIES 71

.5-.75" Diameter, 1/4 Amp, PC Mount

FEATURES

- Terminals From One Side
- Minimum Board Footprint
- Choice of Shaft/Bushing Diameters
- 30° and 36° Angles of Throw
- Military Qualified MIL-DTL-3786/39

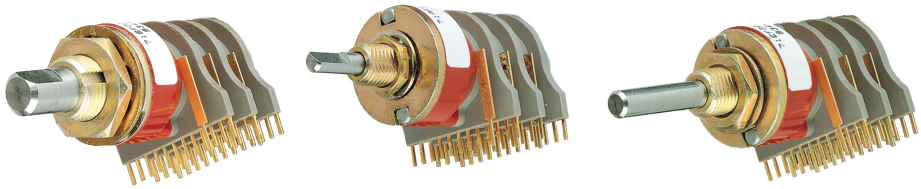

DIMENSIONS: Standard and Military in inches (and millimeters)

0.125" Diameter Shaft: Styles AF and MAF (and sealed versions)

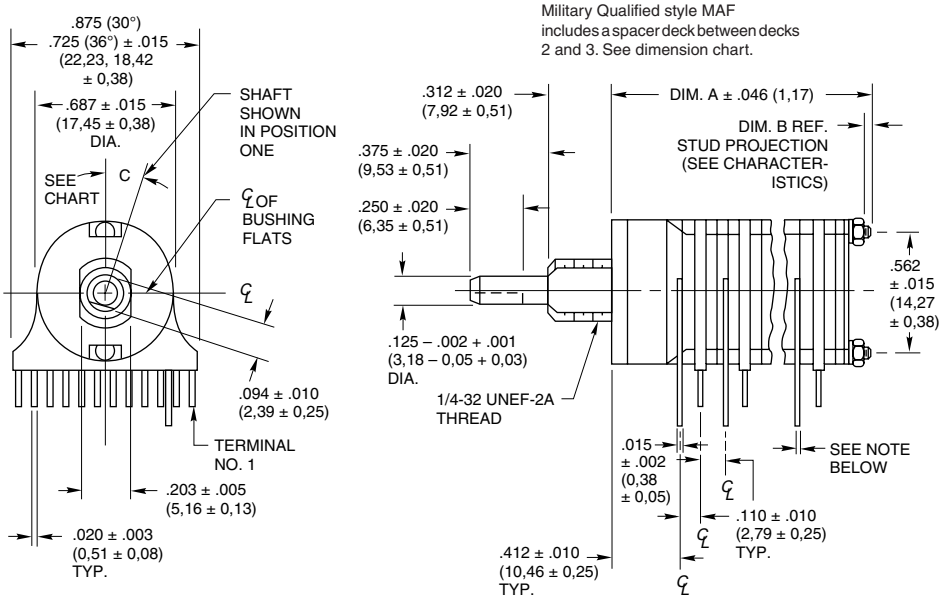

0.250" Diameter Shaft: Styles BF and MBF (and sealed versions)

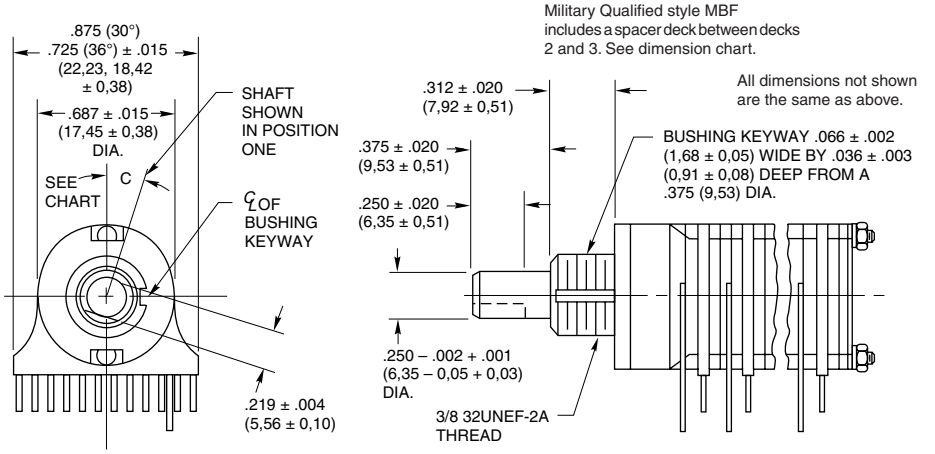

No. of Decks	Dimension A Standard Style	Dimension A Military Style	Dimension B All Styles	Approx. Weight Grams	No. of Decks	Dimension A Standard Style	Dimension B Standard Style	Approx. Weight Grams
1	.761 (19,33)	.761 (19,33)	.031 (0,79)	12	7	2.349 (59,66)	.312 (7,92)	24
2	.979 (24,87)	.979 (24,87)	.031 (0,79)	14	8	2.567 (65,20)	.312 (7,92)	26
3	1.197 (30,40)	1.415 (35,94)	.031 (0,79)	16*	9	2.785 (70,74)	.312 (7,92)	28
4	1.415 (35,94)	1.633 (41,49)	.031 (0,79)	18*	10	3.003 (76,28)	.312 (7,92)	30
5	1.633 (41,48)	N.A.	.031 (0,79)	20	11	3.221 (81,81)	.312 (7,92)	32
6	2.131 (54,13)	N.A.	.312 (7,92)	22	12	3.439 (87,35)	.312 (7,92)	34

Angle C is 15° in 12 position switches and 18° in 10 position switches.
*Military style switch is 18 grams for 3 decks and 20 grams for 4 decks.

Grayhill part number and date code marked on detent cover label. Customer part number marked on request. Military part number marked when required.

Rear Views: Styles AF, BF, MAF, MBF (and sealed versions)

30° and 36° Angle of Throw may be interposed on either shaft diameter.

30° Angle of Throw

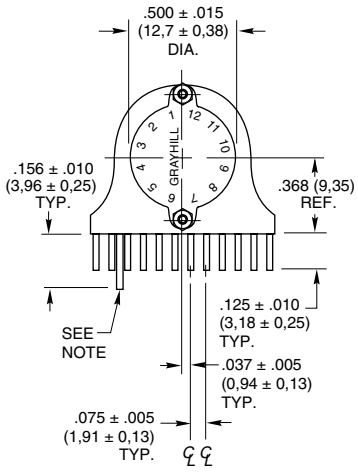

36° Angle of Throw

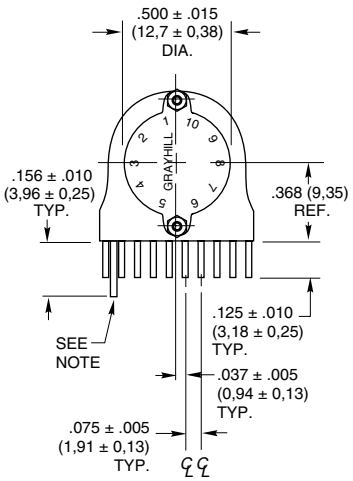

Note: Common location for a single pole per deck switch. For common location on two pole switches see circuit diagrams.

DIMENSIONS: Metric All dimensions are in millimeters

4mm Diameter Shaft: Style EF and ESF

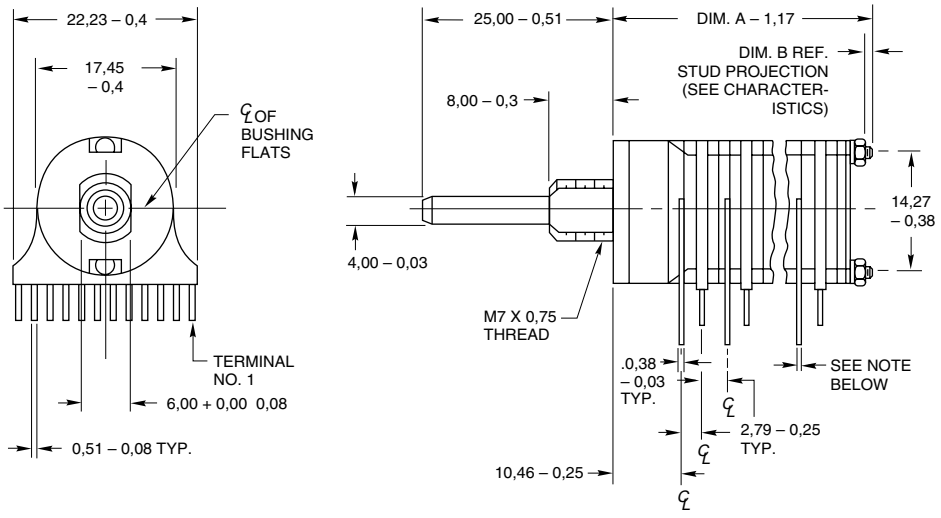

No. of Decks	Dim. A	Dim. B	Approx. Weight Grams	No. of Decks	Dim. A	Dim. B	Approx. Weight Grams
1	19,33	0,79	12	7	59,66	7,92	24
2	24,87	0,79	14	8	65,20	7,92	26
3	30,40	0,79	16	9	70,74	7,92	28
4	35,94	0,79	18	10	76,28	7,92	30
5	41,48	0,79	20	11	81,81	7,92	32
6	54,13	7,92	22	12	87,35	7,92	34

Note: Common location for a single pole per deck switch. For common location on two pole switches see circuit diagrams.

Grayhill part number and date code marked on detent cover label. Customer part number marked on request.

Rear Views

30° and 36° Angle of Throw may be interposed on either shaft diameter.

30° Angle of Throw

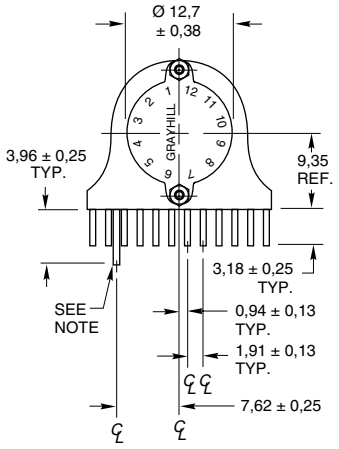

36° Angle of Throw

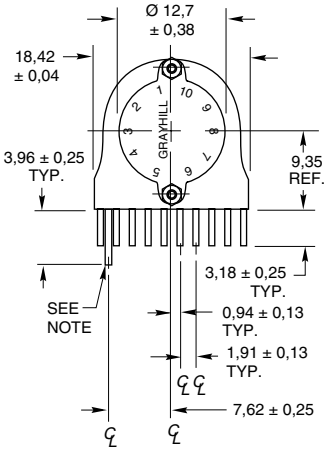

CIRCUIT DIAGRAMS: Standard, Military and Metric PC Mount

Circuit is Viewed From Shaft End and Shown in Position No. 1

30° Angle of Throw

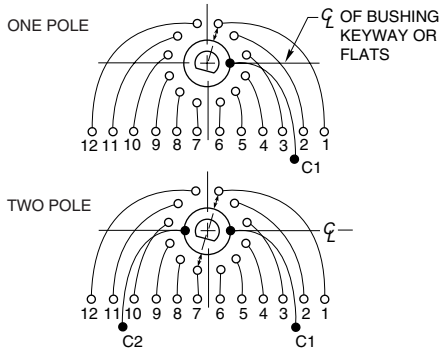

36° Angle of Throw

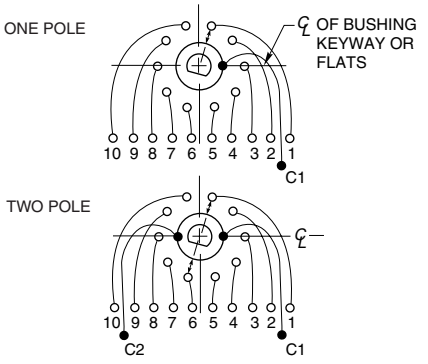

SERIES 71: PC Board Pattern in inches (and millimeters)

All Styles Except 71BT

30° Angle of Throw

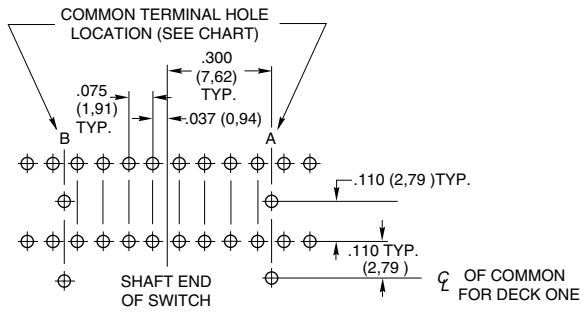

36° Angle of Throw

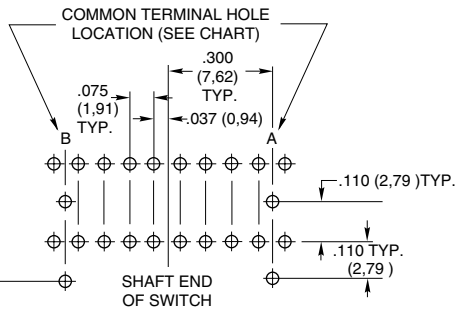

Spacer decks can be supplied to facilitate PC board layouts of three or more decks. A spacer deck does not have any terminals and provides no switching function. Dimensionally, it requires the same space as one normal switch deck. Spacer deck can be placed at any location in the switch, per your instructions. Switches which include spacer decks are procured under a special part number.

Shown for a two deck switch.
Bushing mount is recommended.

Number of Poles Per Deck	Common Terminal Hole Location
1	A
2	A and B

SERIES 71: PC MOUNT ACCESSORY

1/8" and 1/4" Diameter Shaft Styles
in inches (and millimeters)

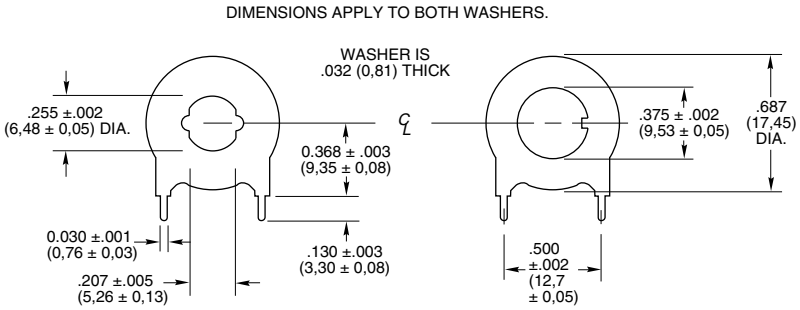

FOR USE WITH STYLE AF
PART 71C2054

FOR USE WITH STYLE BF
PART 71C2053

Metric Mount Styles
in millimeters

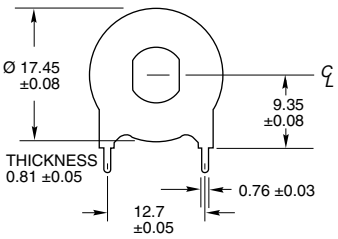

FOR USE WITH STYLE EF
PART 71C2111

For printed circuit styles. Mounting bushing provides additional support for the front end of the switch. Order separately by appropriate part number. Rotary switch discount applies.

SERIES 71

.5-.75" Diameter, 1/4 Amp, Process Sealed

FEATURES

- No Hand Soldering Required
- Sealed to Resist Intrusion by Flux, Solder and Cleaning Solutions
- .75" Diameter
- 250 mA for 20,000 Cycles
- 36°, 1 or 2 Poles, Up to 5 Decks
- 10 Positions, Continuous Rotation, or 2-9 Positions With Fixed Stops

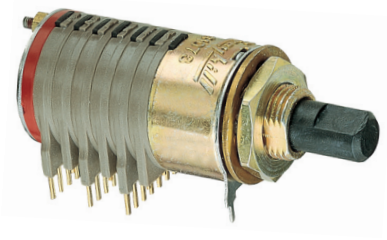

DIMENSIONS: Standard and Military in inches (and millimeters)

Style BT

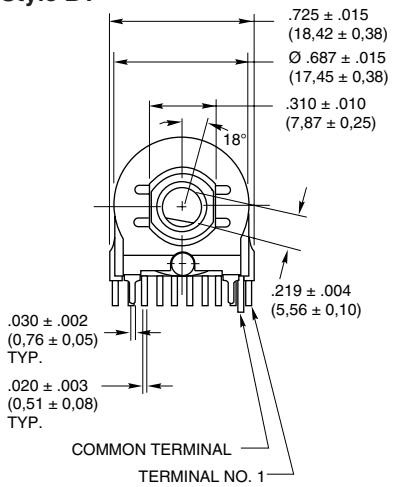

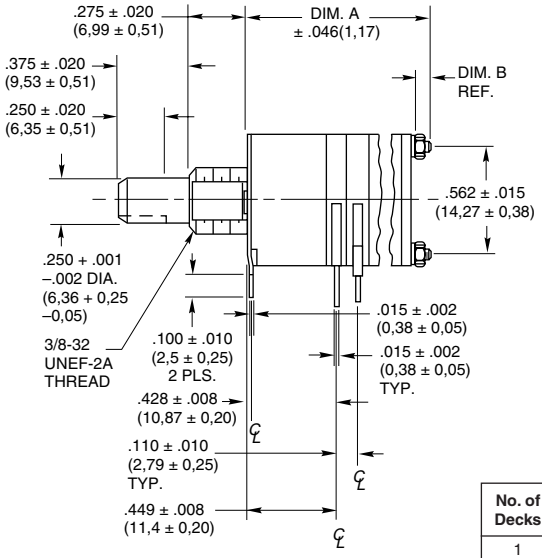

Rear View

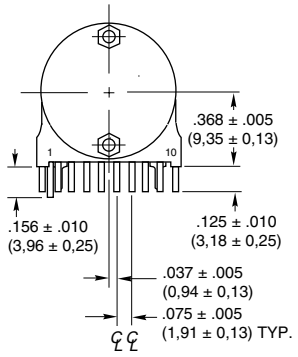

Shaft flat is opposite point of contact for pole number one. Shaft is shown here in position 1.

No. of Decks	Dimension A	Dimension B
1	0.795 (20,19)	0.031 (0,79)
2	1.040 (26,42)	0.053 (1,35)
3	1.285 (32,64)	0.076 (1,93)
4	1.530 (38,86)	0.098 (2,49)
5	1.775 (45,09)	0.120 (3,05)

Grayhill part number and date code marked on detent cover label. Customer part number marked on request.

CIRCUIT DIAGRAMS

Circuit is Viewed From Shaft End and Shown in Position No. 1

36° Angle of Throw

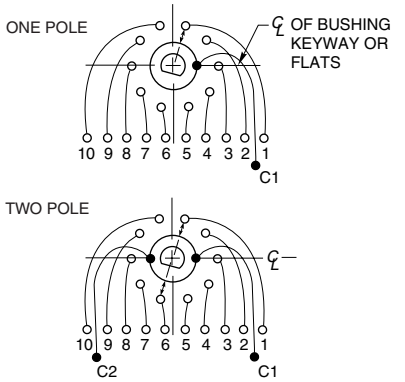

STYLE 71BT: PC Board Pattern

Including Integral Front Plate Standoffs

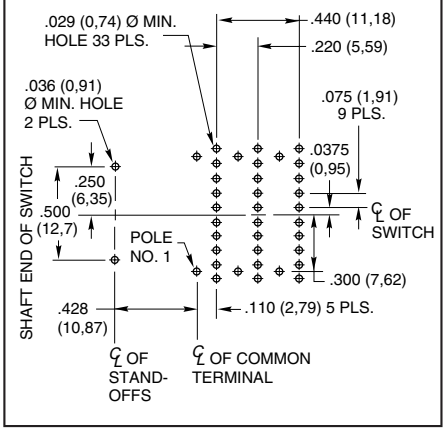

SERIES 71

0.5 to 0.75" Diameter, 1/4 Amp, Concentric Shaft

FEATURES

- Two Switches in the Panel Space of a Single Shaft Rotary

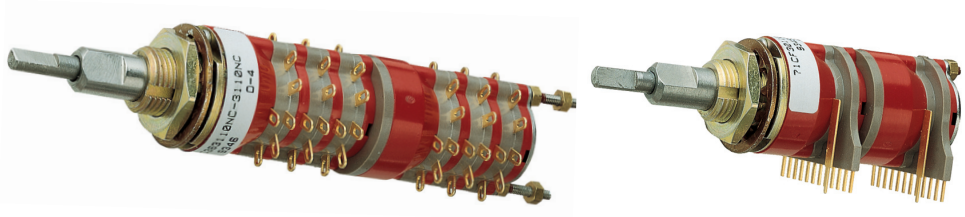

DIMENSIONS in inches (and millimeters)

Solder Lug Terminals: Style C

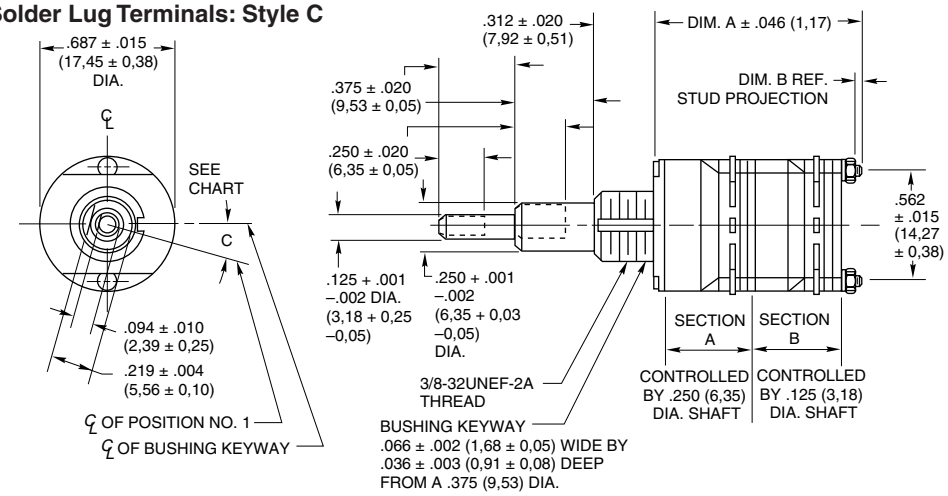

Rear Views

30° and 36° Angle of Throw may be interposed on either shaft diameter.

30° Angle of Throw

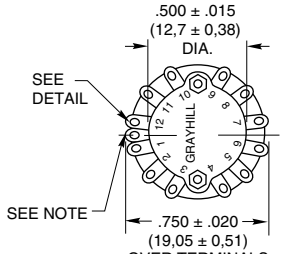

36° Angle of Throw

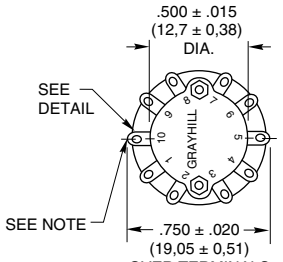

No. of Decks				Approx. Weight Grams
Sec. A	Sec. B	Dimension A	Dimension B	
1	1	1.415 (35,94)	.032 (0,81)	24
2	1	1.633 (41,49)	.032 (0,81)	26
3	1	2.131 (54,13)	.312 (7,92)	28
1	2	1.633 (41,49)	.032 (0,81)	26
2	2	2.131 (54,13)	.312 (7,92)	28
3	2	2.349 (59,66)	.312 (7,92)	30
1	3	2.131 (54,13)	.312 (7,92)	28
2	3	2.349 (59,66)	.312 (7,92)	30
3	3	2.567 (65,20)	.312 (7,92)	32

Angle C is 15° in 12 position switches and 36 ° in 10 position switches.

Terminal Detail

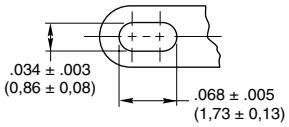

Note: Common location for a single pole per deck switch. For common location on multipole switches see circuit diagrams.

Grayhill part number and date code marked on detent cover label. Customer part number marked on request.

CIRCUIT DIAGRAMS: Solder Lug Terminals

Switch is Viewed From Shaft End and Shown in Position No. 1.

Note: All common terminals are located above base terminals as shown.

30° Angle of Throw

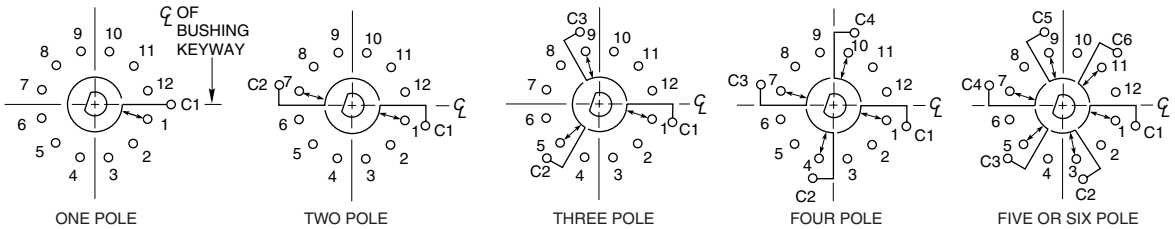

36° Angle of Throw

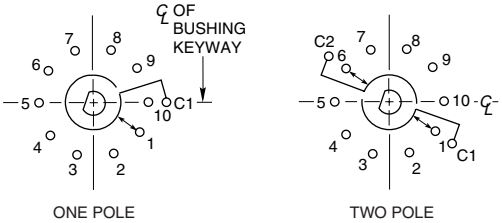

ADD-A-POT SWITCHES

Contact Grayhill for Series 71 Concentric Add-A-Pot or Add-A-Switch type switches.

DIMENSIONS in inches (and millimeters)

PC Mount: Style CF

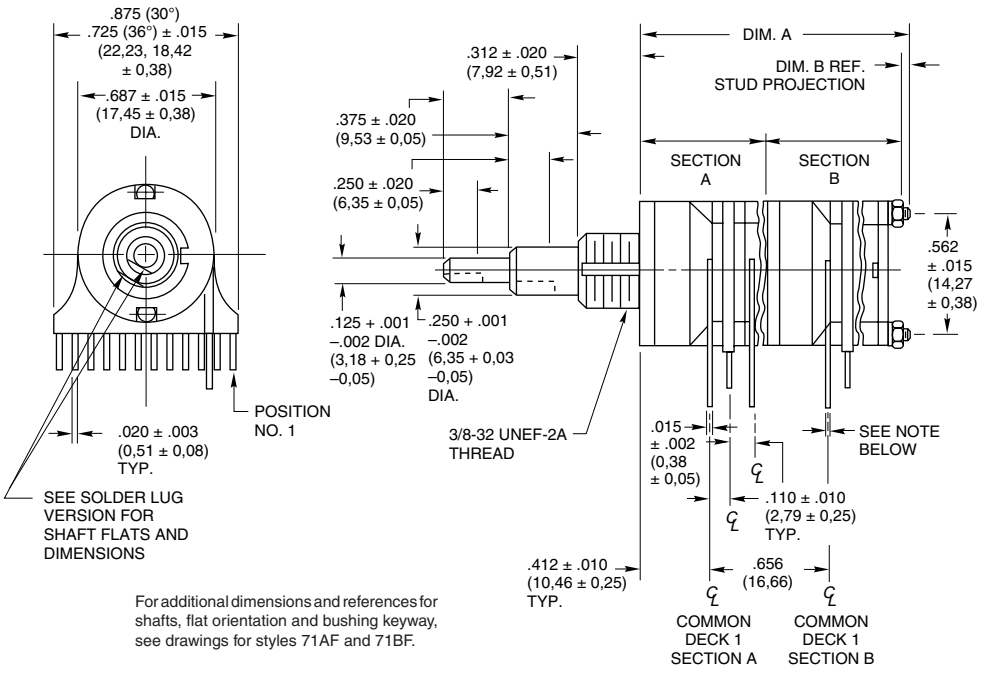

For additional dimensions and references for shafts, flat orientation and bushing keyway, see drawings for styles 71AF and 71BF.

No. of Decks		Dimension A	Dimension B	Approx. Weight Grams
Sec. A	Sec. B			
1	1	1.415 (35,94)	.032 (0,81)	24
2	1	1.633 (41,49)	.032 (0,81)	26
3	1	2.131 (54,13)	.312 (7,92)	28
1	2	1.633 (41,49)	.032 (0,81)	26
2	2	2.131 (54,13)	.312 (7,92)	28
3	2	2.349 (59,66)	.312 (7,92)	30
1	3	2.131 (54,13)	.312 (7,92)	28
2	3	2.349 (59,66)	.312 (7,92)	30
3	3	2.567 (65,20)	.312 (7,92)	32

Grayhill part number and date code marked on detent cover label. Customer part number marked on request.

Rear Views

30° and 36° Angle of Throw may be interposed on either shaft diameter.

30° Angle of Throw

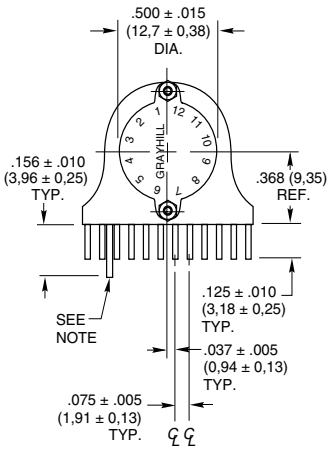

36° Angle of Throw

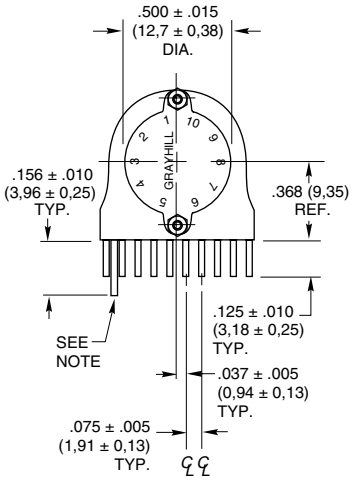

Note: Common location for a Single Pole Per Deck Switch. For common location on multipole switches see circuit diagrams.

CIRCUIT DIAGRAMS: PC Mount Terminals

Switch is Viewed From Shaft End and Shown in Position No. 1.

Note: All common terminals are located above base terminals as shown.

30° Angle of Throw

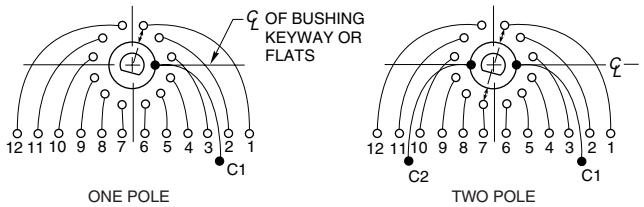

36° Angle of Throw

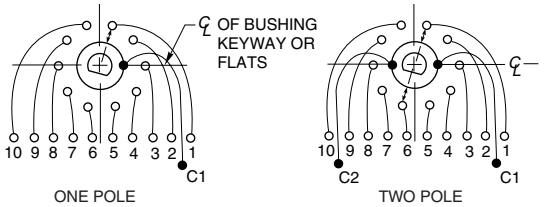

SPECIFICATIONS

Military Qualification MIL-DTL-3786/39

The military style of the Series 71 rotary switch is qualified to MIL-DTL-3786/39. Complete electrical rating information is listed on the following page. The Series 71 rotary switch qualification includes the 30° and the 36° angles of throw, in .125" (3,18) and .250" (6,35) diameter shafts, with solder lug terminals and printed circuit terminals, in sealed and unsealed style switches. Standard variations such as shaft and/or bushing length, etc. that do not affect the switch performance can also be marked as qualified product. Contact Grayhill for complete details.

Dimensionally the military style is the same as the standard style with the exception of the PC version of 3 or 4 decks; a spacer deck between decks 2 and 3 adds another deck length to the switch without increasing the number of operative decks.

Another difference in the standard and military styles is the mounting hardware. Ordered as options with a standard style switch these items are included with the military style switch: non-turn washer with solder lug style and a non-turn washer plus a mounting bushing washer with the PC terminal style.

Complete specification drawings are available from Grayhill, Inc. for the standard military qualified products. Military qualified Series 71 rotary switches may be ordered by the "M" number listed in Military Specification Sheet/39 or by Grayhill part number. All qualified switches will be marked to the specification.

Military Shaft and Panel Seal

A shaft and panel seal is available to provide watertight mounting of the Series 71 standard military style rotary switches. Sealing is accomplished by an O-ring shaft seal and a panel seal washer. Panel seal dimension differences are shown in the dimensional drawings. When the panel seal is compressed, dimensions are approximately the same as an unsealed switch. If the non-turn washer supplied with the switch is used, it should not be allowed to extend entirely through the panel when mounting a sealed switch. However, the bushing may be used as a non-turn device instead. Switches are provided with a double flat bushing in styles which include the letter A and with a bushing which has a keyway in the styles which include the letter B.

SPECIFICATIONS: Materials and Finishes

Materials and Finishes

Standard Style

Cover: Diallyl per (MIL-M-14) ASTM-D-5948 except for 71 BT (see bushing).
Base and Deck Separator: Diallyl per (MIL-M-14) ASTM-D-5948
Rotor Mounting Plate: Thermoplastic
Bushing: Zinc casting, tin/zinc-plated.
Through Bolts and Nuts, Shaft and Rear Support Plate, Stop Pins and Stop Arm (All Others): Stainless steel
Shaft, Stop Plates, Stop Arm (71BT): Reinforced thermoplastic
Detent Rotor: Reinforced thermoplastic for 71BT; phenolic per (MIL-M-14) ASTM-D-5948 for all others
Detent Balls: Steel, nickel-plated
Detent Springs: Tinned music wire
Rotor Contact: Silver alloy and beryllium copper
Base Contacts, Common Plate and Terminals: Brass, Gold plate .000005" minimum over Silver plate .00005" over nickel .00002".
Front Support Plate (71 BT only): Tempered steel, tin/lead-plated.
Interdeck Seal (71 BT Only): Silicone
Extension: Brass, unplated
Mounting Hardware: One mounting nut and one internal tooth lockwasher are supplied with each switch. For switches with A in the style description, the nut is .062" (1,57) thick by .312" (7,92) across flats. For switches with B or C in the style description, the nut is .094" (2,39) thick by .562" (14,27) across flats. Nuts are brass, tin/zinc-plated or stainless steel.

Materials and Finishes

Military Qualified

Cover, Base and Deck Separator: Diallyl per (MIL-M-14) ASTM-D-5948
Rotor Mounting Plate: Thermoplastic
Bushing: Zinc casting, tin/zinc-plated
Through Bolts and Nuts, Shaft Extension, Lockwashers, Shaft and Rear Support Plate, Stop Pins and Stop Arm (All Others): Stainless steel
Detent Balls: Steel, nickel-plated
Detent Springs: Tinned music wire
Rotor Contact: Silver alloy and beryllium copper
Base Contacts, Common Plate and Terminals: Brass, gold plate .000005" minimum over silver plate .00005" over Nickel .00002".
Detent Rotor: Phenolic per (MIL-M-14) ASTM-D-5948
Mounting Hardware: One mounting nut and one internal tooth lockwasher are supplied with each Series 71 switch. For switches with Style A in the description, the nut is .062" (1,57) thick by .312" (7,92) across flats. For switches with Style B or C in the description, the nut is .094" (2,39) thick by .562" (14,27) across flats. Nuts are brass, tin/zinc-plated or stainless steel.
Additional Hardware: Each switch is supplied with a non-turn washer to use if desired. Additionally, each PC mount switch is supplied with a mounting bushing washer (see PC Mount Accessory). For switches with Style A in the description, non-turn washer is stainless steel; for switches with Style B in the description, non-turn washer is stainless steel. Mounting bushing washer (PC Mount Accessory) is brass, tin/zinc-plated.

SPECIFICATIONS: Electrical Ratings, Others

Electrical Ratings
General

Charts: Charts shown are for non-shorting (break before make) contacts. Measurements were made at 25°C and 68% relative humidity. The load life curves show the number of rotational cycles which can be expected for the voltage, current and type of load. Thus, for a standard style switch with a 300 milliampere 115 Vac resistive load, the expected life is 15,000 cycles. Reducing the load to 200 milliamperes increases the life to 25,000 cycles. Life limiting or failure criteria are listed in the rating sections which follow.

Cycles: A cycle is a 360° rotation and a return through all switch positions to the starting position.

Voltage: As listed in charts.

Standard

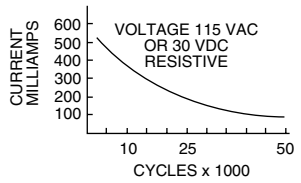

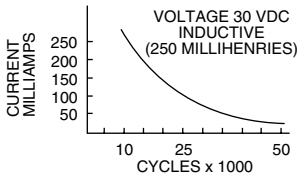

Military

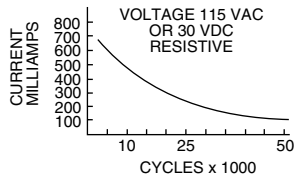

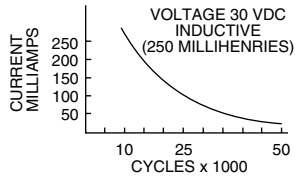

Electrical Ratings
Standard Style

Curves are based on the following failure criteria:

Contact Resistance: 50 milliohms maximum (20 milliohms initially).

Insulation Resistance: 1,000 megohms minimum between terminals and shaft. (50,000 megohms initially).

Voltage Breakdown: 500 Vac minimum between mutually insulated parts.

Current Rating: These switches will carry 4 amperes with a maximum contact temperature rise of 20°C. If the life limiting characteristics are less critical than those shown above, if elevated temperatures or reduced pressures are involved, Grayhill can predict the switch life for the application.

Meet the Following Requirements of MIL-DTL-3786: Moisture Resistance: Medium and High Shock; Vibration (10 to 2,000 cps); Thermal Shock (-65°C to 85°C); Salt Spray, Explosion; and Stop Strength (10 in-lb).

Electrical Ratings
Military Style

Curves are based on the following failure criteria:

Qualified to the following MIL-DTL-3786/39 circuit values: (also see standard style description.) The Series 71 has been tested to meet the requirements of MIL-DTL-3786, Style SR39, the majority of which are listed here. At 85°C approximately 68% relative humidity and sea level pressure, the switches have been tested to make and break the following loads, as stated in MIL-DTL-3786/39: 125 milliamperes at 28 Vdc resistive; 75 milliamperes at 115 Vac resistive.

The switches have also been tested at reduced barometric pressure (70,000 feet), 25°C at approximately 68% relative humidity to make and break the following loads as stated in MIL-DTL-3786/39: 50 milliamperes, 28 Vdc resistive; 20 milliamperes, 115 Vac resistive. When tested to the above loads at stated conditions, the Series 71 switches meet the following life-limiting criteria after 25,000 cycles of operation in accordance with MIL-DTL-3786/39.

Contact Resistance: 50 milliohms maximum after life.

Insulation Resistance: 1,000 megohms minimum between terminals and shaft.

Dielectric Strength: 500 Vac (atmospheric pressure) and 350 Vac (reduced pressure) between mutually insulated parts.

The Series 71 also meets the requirements of MIL-DTL-3786/39 for moisture resistance, stop strength, rotational torque, vibration (10 through 2,000 cps), medium and high shock, salt spray, explosion, thermal shock (-65°C to 85°C) and terminal pull. When tested at sea level, 25°C and 68% relative humidity with failure criteria of 50 milliohms maximum contact resistance and 500 Vac breakdown voltage, these switches will make and break 250 milliamps at 28 Vdc inductive (250 millihenries) 500 milliamps at 28 Vdc resistive: 500 milliamps at 115 volts Vac, 60 hertz resistive, for 10,000 cycles of operation.

Additional Characteristics
Standard and Military Styles

Rotational Torque: 4-32 ounce-inches, (28-230 N•mm) depending on the number of poles per deck and the number of decks.

Contacts: Shorting or non-shorting wiping contacts with over 100 grams of contact force.

Shaft Flat Orientation: Opposite first position pole no. 1 (See Circuit Diagrams).

Terminals: Switches are provided with full circle of terminals regardless of the number of active positions.

Extended Studs: Switches of 6 or more decks (or concentric switches of 4 or more) have longer studs and extra stud nuts for recommended double end mounting. Stud hole size is 1/16" diameter for #0-80 NF-2A thread.

Stop Strength: 10 pound-inches.

Mounting Bushing Strength: 10 pound-inches.

ADJUSTABLE STOPS

Set and Reset Stops to Limit Rotation
Form, Fit, Function Equivalent to Fixed Stop Styles

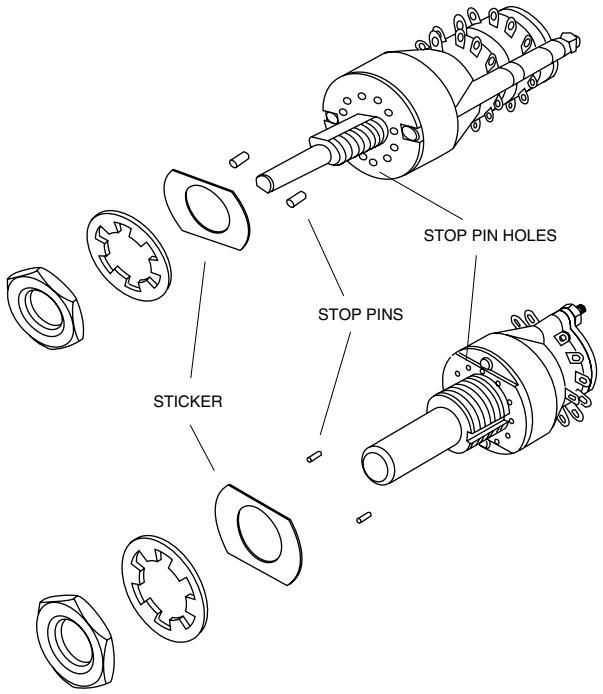

The adjustable stop Series 71 rotary switches allow you to change the number of positions per pole. Simply remove and relocate stop pins in the holes in the front of the switch. The pins are held in place by a self adhesive sticker which fits over the front plate.

This feature is available in the Series 71 single shaft standard switches with either 1/8" or 1/4" diameter shafts with either PC or solder lug terminals. It is not available in military qualified or concentric shaft styles.

All dimensions, ratings and characteristics are the same as the fixed stop equivalent. The chart shown here describes the adjustable stop style substitutions for the fixed stop styles. Although Series 71 is not an exact dimensional equivalent of the fixed stop styles of Series 8 and 9, it most nearly represents a functional substitution.

Fixed Stop Style	Adjustable Stop Substitution
08A	71AD
09A	71AD
71A	71AD
71AF	71ADF
71B	71BD
71BF	71BDF
71E	71ED
71EF	71EDF

SHAFT AND PANEL SEAL

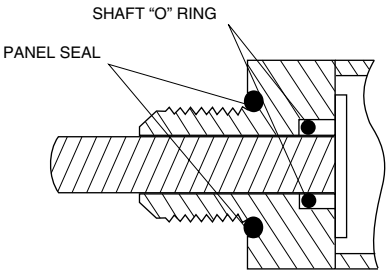

The shaft is sealed by an O-ring inside the bushing. The panel is sealed by an O-ring at the base of the bushing.

The seals do not alter the dimensions as shown in the drawings when the switch is mounted.

The panel seal is silicone rubber. The shaft seal is an O-ring per MIL-P-5516B.

ACCESSORIES: Non-Turn Washers in inches (and millimeters)

1/8" and 1/4" Diameter Shaft Switches

The bushing of the Series 71 switch is designed so the switch will not turn if the panel has been cut to fit the exact bushing shape. The bushing for the 1/8" diameter shaft switch has a double flat; the 1/4" diameter shaft switch has a keyway in the bushing. An alternate means of keeping the switches from turning is to mount them with optional, non-turn washers.

Part number 50J1066 is made of Stainless Steel. It is supplied with military switches with Style A in the description. When ordered for standard product, a like number of switches must be ordered.

Part number 12C1087-1 is Brass, tin/zinc-plated and may be ordered for standard product.

Part number SHH694-5 is Stainless Steel washer supplied with all military style switches with Style B in the description.

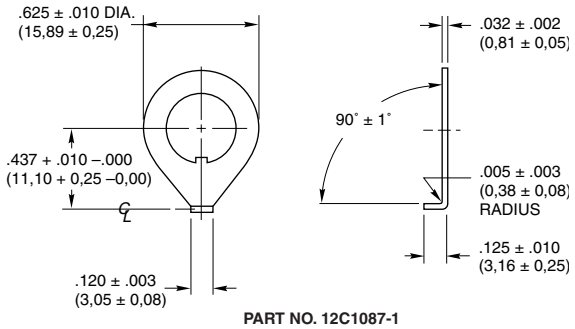

PART NO. 12C1087-1
STANDARD

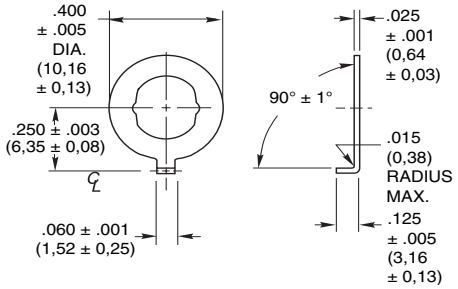

PART NO. 50J1066
MILITARY AND STANDARD
FOR 1/8" DIAMETER SHAFT

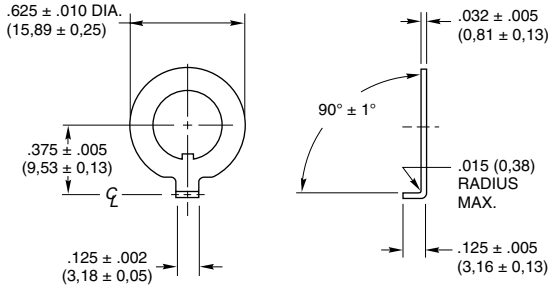

PART NO. SHH694-5
MILITARY
FOR 1/4" DIAMETER SHAFT

4mm Diameter Shaft Switches

Non-Turn Washer
For styles E, ED, EF and EDF.
Mounting bushing washer provides non-turn feature.
302 Stainless Steel.
Part No. 71 J1103. Contact Grayhill for price.

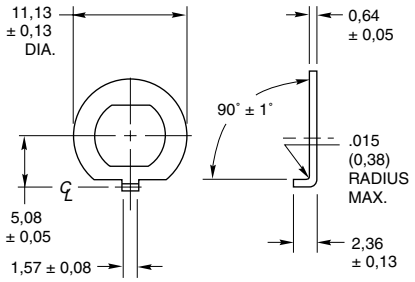

Recommend Panel Cutout

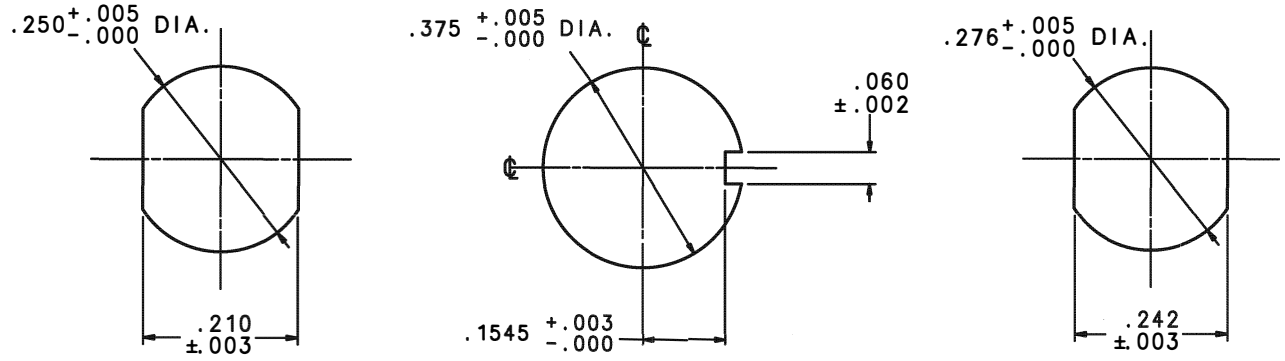

CHOICES AND LIMITATIONS: Series 71

A = 1/8" Diameter Shaft
B = 1/4" Diameter Shaft
E = Metric Mount Shaft & Bushing
D = Adjustable Stops (Adj. Stop)
S = Shaft and Panel Seal (S/P Seal)

F = PC Mount Terminals
T = PC Mount Terminals and Process Sealed Switching Decks & Bushing; no panel seal
M = Military

All switches without F or T have solder lugs
C = Concentric Shaft
2 Switches with same Style and Angle of Throw, one behind the other.
Limits below apply to either switch section (A or B).

Style Choices			Angle of Throw	No. Of Decks	Poles Per Deck	Positions Per Pole[1]	Shorting Or Non-Shorting
Basic Style	With S/P Seal	Adj. Stop					
A B E	AS BS ES	AD BD ED	30°	01 thru 12 01 thru 08 01 thru 05 01 thru 04 01 thru 03 01 or 02	1 2 3 4 5[5] 6[5]	02 thru 12[3] 02 thru 06 02 thru 04 02 or 03 02 02	N or S N or S N or S N or S N or S N or S
			36°	01 thru 12 01 thru 08	1 2	02 thru 10[3] 02 thru 05	N or S N or S
AF BF EF	ASF BSF ESF	ADF BDF EDF	30°	01 thru 12 01 thru 08	1 2	02 thru 12[3] 02 thru 06	N or S N or S
			36°	01 thru 12 01 thru 08	1 2	02 thru 10[3] 02 thru 05	N or S N or S
BT	——	——	36°	01 thru 05 01 thru 05	1 2	02 thru 10[3] 02 thru 05	N or S N or S
MA MB	MAS MBS	—— ——	30°	01 thru 05[4] 01 thru 05[4] 01 thru 05[4] 01 thru 04[4] 01 thru 02[4]	1 2 3 4 6	02 thru 12[3] 02 thru 06 02 thru 04 02 or 03 02	N or S N or S N or S N or S N or S
			36°	01 thru 05[4] 01 thru 05[4]	1 2	02 thru 10[3] 02 thru 05	N or S N or S
MAF MBF	MASF MBSF	—— ——	30°	01 thru 04[2,4] 01 thru 04[2,4]	1 2	02 thru 12[3] 02 thru 06	N or S N or S
			36°	01 thru 04[2,4] 01 thru 04[2,4]	1 2	02 thru 10[3] 02 thru 05	N or S N or S
C	——	——	30°	01 thru 03 01 thru 03 01 or 02 01 01 01	1 2 3 4 5 6	02 thru 12[3] 02 thru 06 02 thru 04 02 or 03 02 02	N or S N or S N or S N or S N or S N or S
			36°	01 thru 03 01 thru 03	1 2	02 thru 10[3] 02 thru 05	N or S N or S
CF	——	——	30°	01 thru 03 01 thru 03	1 2	02 thru 12[3] 02 thru 06	N or S N or S
			36°	01 thru 03 01 thru 03	1 2	02 thru 10[3] 02 thru 05	N or S N or S

[1] For Adjustable Stop styles (with the letter D), use AJ instead of number of positions when ordering.
[2] Military Qualified PC mount switches of 3 or 4 operative decks have an additional spacer deck after deck 2. Use total decks to calculate length; but use only the number of *operative* decks when creating the part number.
[3] For 1-pole switches with maximum positions, specify **F**ixed stop after last position or **C**ontinuous rotation when ordering. (Note: 1 p, 71BT, 10 positions, is available only as **C**ontinuous).
[4] In addition to qualified types (Solder lug–5 decks; PC mount–4 decks), Grayhill can provide switches with additional decks in the materials of the 'M' style. Contact Grayhill.
[5] Switches in 30° throw with 5 or 6 poles per deck are not available with adjustable stops.

ORDERING INFORMATION: Single Shaft Switches

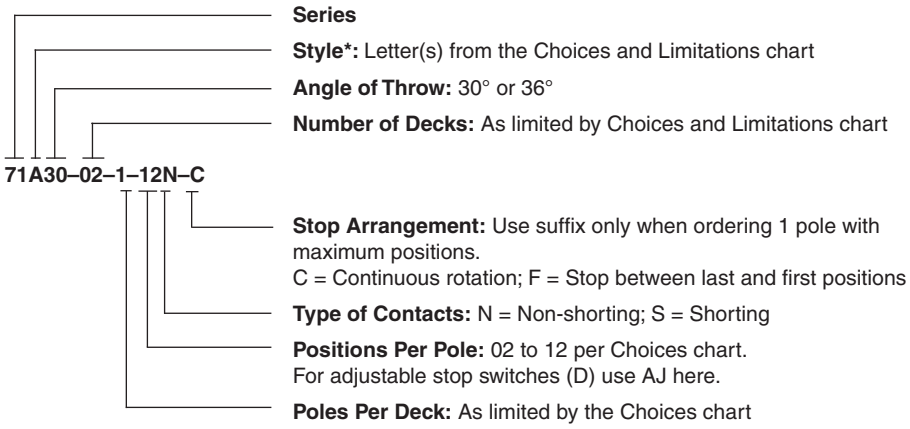

** All rotary switches that are required to have military designated markings and testing adhering to MIL-DTL-3786 are to be ordered by specifying the military part number identified on the appropriate slash sheet.*

ORDERING INFORMATION: Concentric Shaft Switches

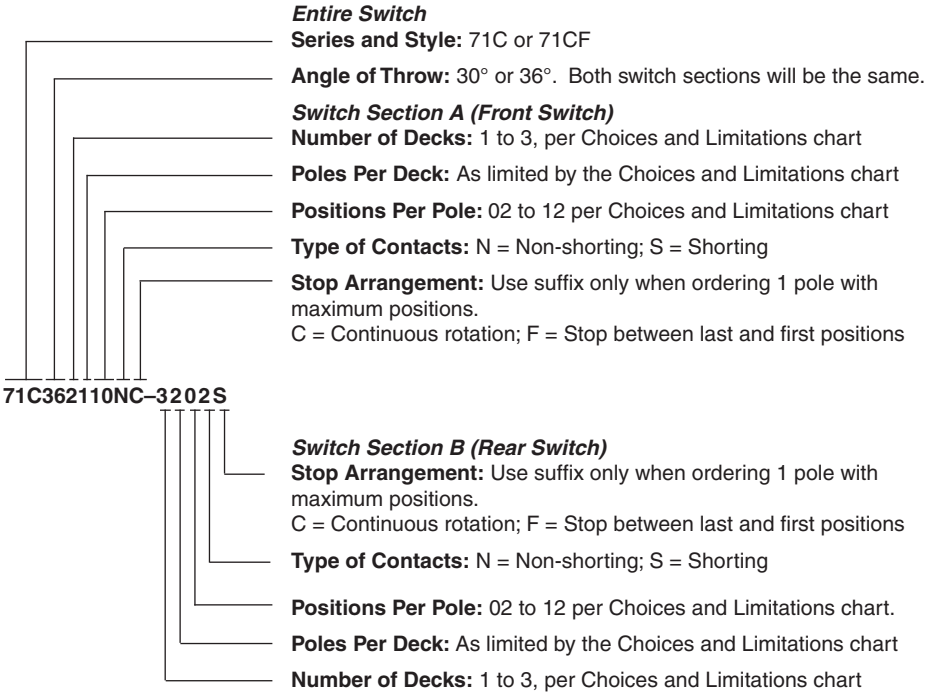

Available from your local Grayhill Distributor.
For prices and discounts, contact a Local Sales Office, an authorized local Distributor or Grayhill.

SERIES 71
Binary Code

FEATURES
- 1/4" or 1/8" Shaft Diameters
- 25,000 Cycles at 125 mA
- Optional Seal Versions
- Adjustable Stop Versions

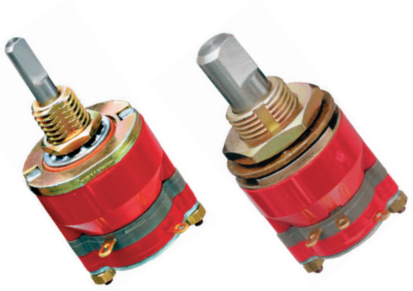

DIMENSIONS in inches (and millimeters)

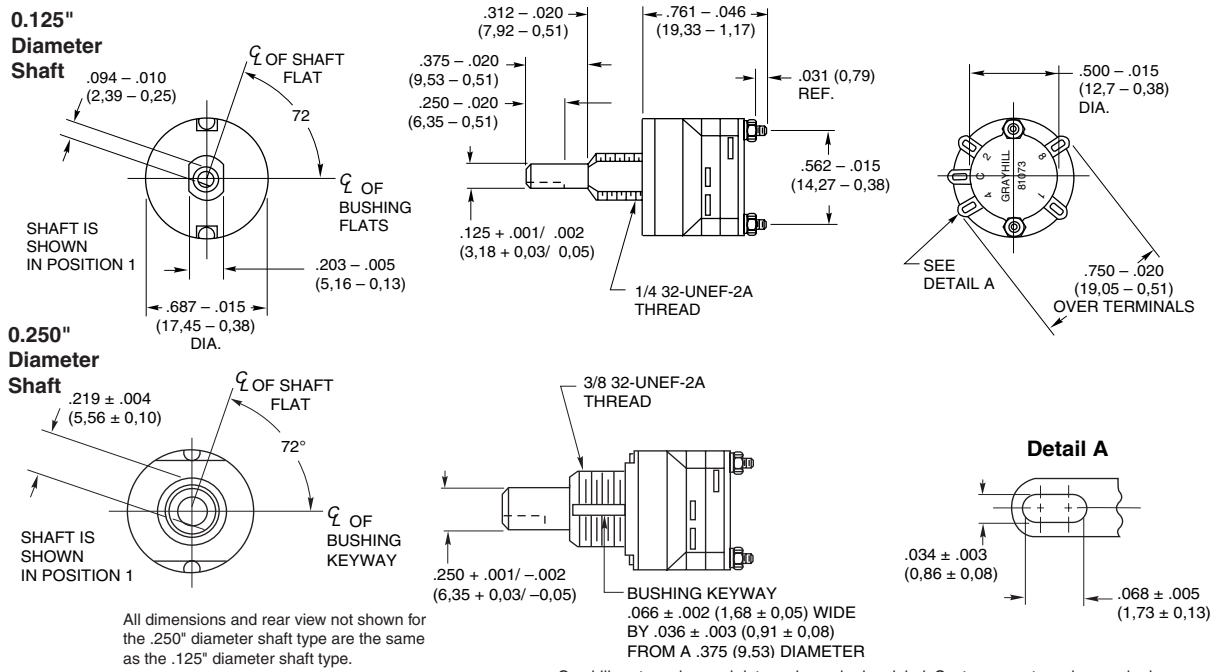

All dimensions and rear view not shown for the .250" diameter shaft type are the same as the .125" diameter shaft type.

Grayhill part number and date code marked on label. Customer part number marked on request.

CODE AND TRUTH TABLE

Output Terminal	Decimal Position 0	1	2	3	4	5	6	7	8	9
1		●		●		●		●		●
2			●	●			●	●		
4					●	●	●	●		
8									●	●

● Indicates contact is made to the common.

SPECIFICATIONS

Electrical Rating
Rated: To make and break 125 mA at 30 Vdc resistive at standard conditions
Life Expectancy: 25,000 cycles at rated load; 50,000 cycles mechanical. For ratings at different loads and conditions, contact Grayhill.
Contact Resistance: 100 milliohms maximum (50 milliohms initially)
Insulation Resistance: As measured between mutually insulated parts
Initially: 50,000 megohms minimum
After Life: 10,000 megohms minimum
Voltage Breakdown: 500 Vac between mutually insulated parts
Carry Current: These switches will carry 3 amperes with a maximum contact temperature rise of 20°C.

OPTIONS

Shaft and Panel Seal
Shaft is sealed by o-ring inside the bushing; panel is sealed by o-ring at the base of the bushing. Seals do not alter dimensions as shown in the drawing when switch is mounted. Panel seal is silicone rubber. Shaft seal is an o-ring per MIL-P-5516B. Shaft and panel seal is not available on adjustable stop switch.

Adjustable Stop Switches
Adjustable stop switch lets you limit the number of positions. Remove and relocate pins in the front plate. A sticker holds the pins in place. With the exception of holes in the front plate, all dimensions, ratings, and characteristics are the same as the other Series 71 coded switches. For diagrams, see Standard Switch.

Additional Characteristics
Rotational Torque: 8 to 16 oz-in. **Contacts:** Non-shorting wiping contacts **Shaft Flat Orientation:** As shown in the drawing, switch would provide a decimal 1 output.

Operating Temperature Range: -40 °C to +85 °C

Materials and Finishes
Base: Diallyl per MIL-M-14
Rotor Mounting Plate: Thermoplastic. **Rotor Contact:** Phosphor Bronze, gold-plated 30 microinches minimum
Terminals: Brass, gold plate (20 microinches min) over silver plate (300 microinches min) **Additional Materials:** Other switch materials and finishes are the same as listed for the standard switch.

ORDERING INFORMATION

Shaft Diameter And Description	Part Number
1/8" Continuous Rotation	**71AY23401**
1/8" Cont. Rot., Sealed	**71AY23402**
1/4" Continuous Rotation	**71BY23403**
1/4" Cont. Rot., Sealed	**71BY23404**
1/8" Adjustable Stops	**71AD36-3118**
1/4" Adjustable Stops	**71BD36-3119**

Available from your local Grayhill Distributor.
For prices and discounts, contact a local Sales Office, an authorized local Distributor or Grayhill.

SERIES 71 J and L

Multi-Deck, Standard & Anti-Static

LOCK FEATURES

- Economical
- Standard or Anti-Static Style
- 5-Plates, 1-Sided Key

SWITCH FEATURES

- Economical
- 36° or 30° Throws
- Up to 16 Poles Per Switch
- 250 mA for 15,000 Cycles

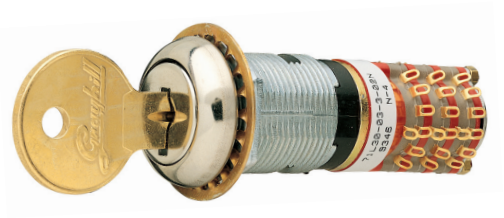

DIMENSIONS in inches (and millimeters)

Key slot shown in position 1.
Key to be inserted with cut side down.

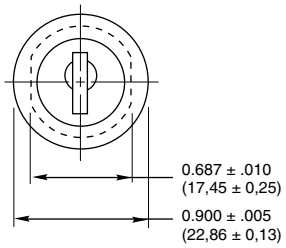

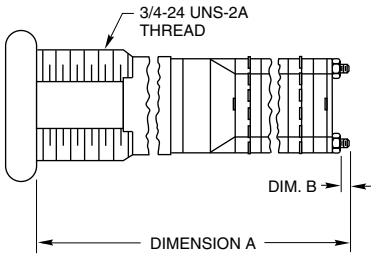

30°

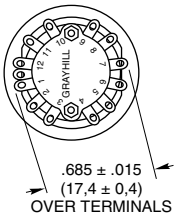

36°

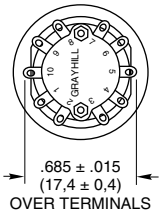

Note: Switch/key positions are not aligned with terminal positions.

Number of decks	1	2	3	4	5	6	7	8	9	10	11	12
Dim. A, Style J (In.)	2.441	2.659	2.877	3.095	3.313	3.811	4.029	4.247	4.465	4.683	4.901	5.119
Dim. A, Style L (In.)	1.811	2.029	2.247	2.465	2.683	3.181	3.399	3.617	3.835	4.053	4.271	4.489
Dim. B Style J & L(In.)	.031	.031	.031	.031	.031	.312	.312	.312	.312	.312	.312	.312
Dim. A, Style J (mm)	62,00	67,54	73,08	78,61	84,15	96,80	102,34	107,87	113,41	118,95	124,49	130,02
Dim. A, Style L (mm)	46,00	51,54	57,07	62,61	68,15	80,80	86,33	91.87	97,41	102,95	108.48	114,02
Dim. B Style J & L(mm)	0,79	0,79	0,79	0,79	0,79	7,92	7,92	7,92	7,92	7,92	7,92	7,92

For switch specifications and additional dimensions, see Standard Switch Pages.

Grayhill part number and date code marked on label.
Customer part number marked on request.

LOCK DETAIL

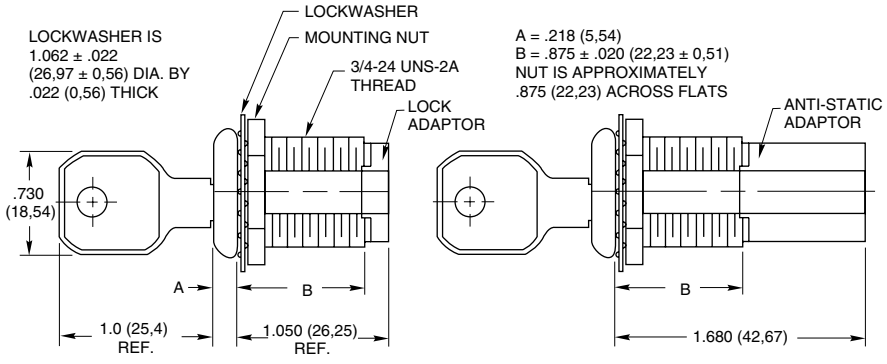

RECOMMENDED PANEL CUT

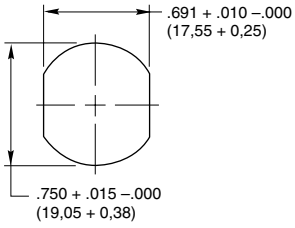

Rotary Switches

CHOICES

Style	Description	Angle of Throw	No. Of Decks	Poles/ Deck	Positions Per Pole	Shorting or Non-Shrtg.
Series 71 Switches						
L	Standard, Solder Lugs	30°	01 to 12	1	02 to 12*	N or S
			01 to 08	2	02 to 06	N or S
			01 to 05	3	02 to 03	N or S
			01 to 04	4	02 to 03	N or S
J	Anti-static, Solder Lugs		01 to 03	5	02	N or S
			01 or 02	6	02	N or S
		36°	01 to 12	1	02 to 10*	N or S
			01 to 08	2	02 to 05	N or S

*For single pole switches with maximum positions, specify continuous rotation or fixed stop when ordering.

LOCK SPECIFICATIONS

Mounting: By bushing, nut and lockwasher
Static Voltages: Anti-static style withstands 15,000 Vdc
Keying: All locks have identical keys unless specially ordered otherwise

Key Removal

30° Throw:	Position 1 and 180°
Special key removal:	Every 90°
36° Throw:	All positions
Special key removal:	Position 1 only

Orientation of Keylock Switch: Bushing flats are on both sides of the mounting thread with the key upright in the first position with cut side down.

LOCK MATERIALS & FINISHES

Keys: Brass; 2 supplied
Lock Bezel: Stainless steel
Lock Barrel & Plug: Zinc treated with chromate
Lock Adaptor/Extension: Thermoplastic

ORDERING INFORMATION

Series
Style Letter: L for standard; J for anti-static
Angle of Throw: 30 or 36
Number of Decks: 01 thru 12 (per Choices chart)
Poles per Deck: 1 thru 6 (per Choices chart)
Positions per Pole: 02 thru 12 (per Choices chart)
Type of Contacts:
N = Non-shorting
S = Shorting
Stop Arrangement Suffix:
(needed only for 1-pole switches with maximum positions)
F = Fixed stop between last and first positions
*Leave blank for continuous rotation

71 L 30-03-1-12N-F

STANDARD SWITCH PAGES

For additional switch dimensions, ratings, circuitry, and specifications, see Series 71 datasheet.

Available from your local Grayhill Distributor.
For prices and discounts, contact a local Sales Office, an authorized local Distributor or Grayhill.

Adjustable Stop Rotary Switches

Features

- Quick Route to Rotary Switches
- For Prototypes and Small Production Runs

Series 42/44

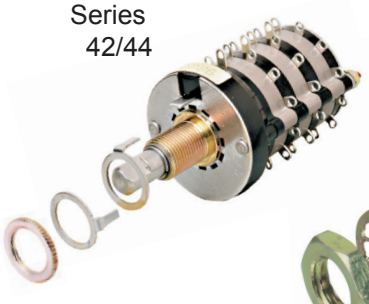

Series 50/51



Series 56

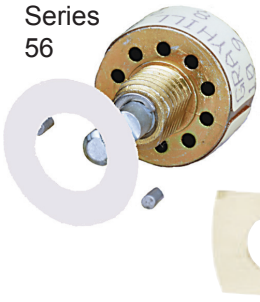

Series 71

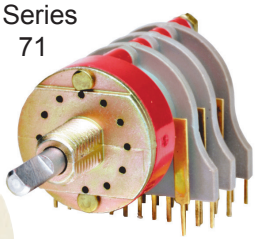

BEST AVAILABILITY

The Problem

Procurement lead time on rotary switches for prototypes and small production runs can be long. This is often a source of headache for design engineers and production control managers.

Grayhill makes more than 300,000 combinations of rotary switch styles; number of decks, poles per deck, positions per pole, military qualified or commercial grade, etc. This wide variety makes it impractical for either distributors or manufacturers to stock completed switches. Consequently, even small quantities must be built to order.

The Solution

Grayhill Electronic Distributors can supply a wide variety of rotary switches with Adjustable Stops. This feature gives you a switch immediately with exactly the electrical properties you need. These Adjustable Stop switches have the basic mechanical characteristics of their fixed stop counterparts. To get the right number of positions per pole for your application, simply adjust the stop washers or stop pins.

By stocking a few switches, the Distributor provides over 100,000 possible combinations of switches. This includes the popular styles, sizes, angles of throw, number of decks, poles per deck, positions per pole, and types of contacts. Availability of these switches through Distributors speeds prototype development time. There is no time lag in waiting for factory made samples.

The Substitution

Writing an equivalent part number is easy. To obtain an adjustable-stop equivalent to a fixed-stop rotary switch you must substitute style letters and possibly series number. Then replace the positions-per-pole number in the fixed-stop number with the letters AJ. See the examples for the scheme.

When adjustable equivalents apply, the rotary switch pages will indicate the substitutions. A chart will show the fixed stop rotary switch series, style and angle of throw as well as the adjustable stop rotary switch series, style and angle of throw. Then the letters AJ in the positions-per-pole location, gives you the part number of the equivalent.

Suppliers

Distributors can supply 1 and 2-deck adjustable-stop switches from stock (one or two poles per deck). They can also quickly secure other variations from factory stock. Reduce prototype development time. Use Grayhill Adjustable Stop Rotary Switches for all of your prototype requirements.

These electronic distributors also maintain a representative stock of Grayhill products. Local availability can often "save the day", and simplify your paperwork.

Fixed Stop Rotary Switch

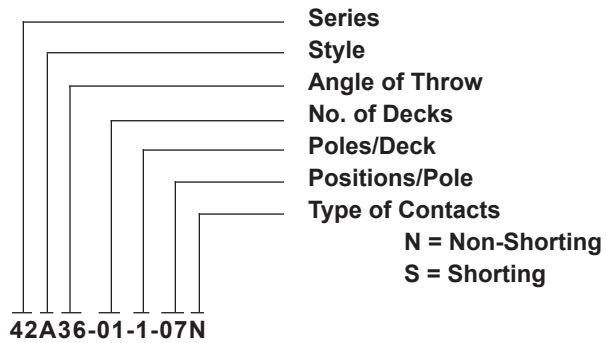

Adjustable Stop Equivalent

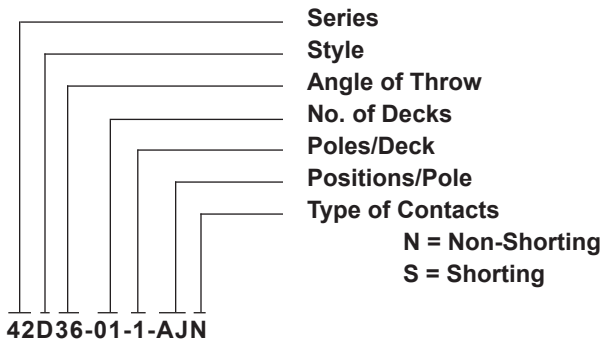

Rotary Switch Engineering Information

Catalog Ratings

Are catalog ratings misleading? In most cases, yes. Load and life ratings shown in most catalogs are usually invalid for most applications. This results from the complex interplay of such factors as environment, duty cycle, life limiting or failure criteria, actual load, etc. Circuit designers should be aware of these factors, and the effect they have on the useful life of the switch in their applications.

The problem of switch rating arises from the wide variety of requirements placed on the switch. This includes various applications, and the sensitivity of the switch to a change in requirements. If we attempted to establish life ratings for all possible applications, we would have an almost infinite variety of ratings.

To simplify the problem, switch manufacturers, switch users, and the military, have established certain references for ratings. These include loads, life requirements, environments, duty cycles, and failure criteria. These references are arbitrarily established. But, they allow you to compare different switch designs. They do not, however, match the actual requirements for most applications.

The curves shown here are an example of some of the life load curves. These curves are life load characteristics of the Grayhill 42M and 44M switches. Note that the curves consider only two voltage sources and two types of loads. These voltages and loads are, however, considered as standards for testing procedures by the industry.

Curve data is based on tests conducted at sea level, 25°C and 68% relative humidity. Cycle = 360° rotation and return. Cycling rate is 10 cycles per minute. Switch rating is for non-shorting contacts.

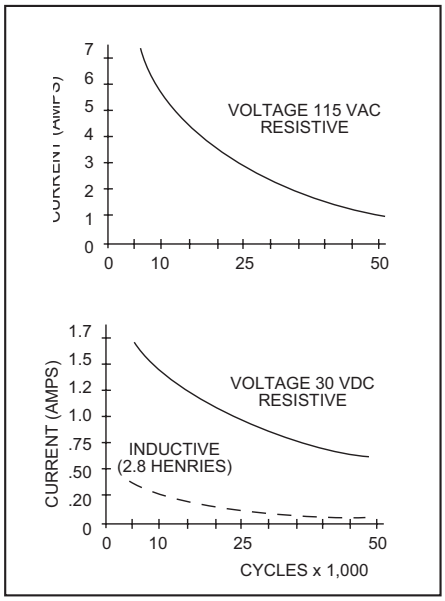

These curves allow you to predict the expected life of the switch once you know the voltage, current and type of load. Also note that each cycle is approximately a 360° rotation and a return. For a ten position switch this would be a rotation from position 1 to position 10 and back to 1. This cycle runs approximately ten times a minute. Thus testing causes more electrical and mechanical wear than what the switch incurs in actual use.

Summary

The life and load ratings in this and other catalogs are probably not totally valid for your application. The bright side of the picture is that in most applications the switch will perform better than its ratings. This is because the standard industry test conditions are more stringent than those found in most applications.

This difference can be very dramatic. For example, Grayhill's 42A and 44A Series Rotary Switches, are rated at 1 ampere (115 Vac resistive). However, they will operate at 5 amperes in many applications. To see how some major factors influence switch performance, read on.

USEFUL LIFE CRITERIA

The "useful" life of a switch in your application depends on what you demand of it. This includes parameters such as contact resistance, insulation resistance, torque, detent feel, dielectric strength, and many other factors. For example, a contact resistance of 50 milliohms may be totally unusable in certain applications such as a range switch in a micro-ohm meter. In other applications a contact resistance of 5 ohms may be perfectly satisfactory.

In establishing "useful" life for a switch in your application, you must first determine "failure criteria," or "end of life" parameters. At what level of contact resistance, dielectric strength, etc., is the switch no longer acceptable for your application?

Most switches are acceptable on all parameters when new. There is a gradual deterioration in performance with life. The rate of deterioration varies greatly with basic switch design. Often, circuit designers select a switch on the basis of its performance when new. This is a mistake. The performance of the switch after several years of equipment use is more significant. To estimate this, first determine the life limiting or failure criteria for your application. In most uses, important life-limiting (failure) criteria include the following parameters:

- Contact Resistance
- Insulation Resistance
- Dielectric Strength
- Actuating Force

Contact Resistance

This is the resistance of a pair of closed contacts. This resistance effectively appears in series with the load. Typical values are in the range of a few milliohms for new switches. These values usually increase during life. The rate of increase is greatly affected by the voltage, current, power factor, frequency, and environment of the load being switched. Typical industry standard "end of life" criteria for this parameter are:

MIL-DTL-3786:	20 milliohms (Rotary Switches)
MIL-S-6807:	20 milliohms (Snap Pushbuttons)
MIL-S-8805:	40 milliohms (Pushbuttons)
MIL-S-83504:	100 milliohms (DIP Switches)

Contact resistance can be measured by a number of different methods. All of them are valid depending upon the switch application and the circuit. Grayhill uses the method in applicable military specifications. This method specifies an open circuit test voltage and a test current. The voltage drop across the closed contacts is measured. The contact resistance is determined by Ohm's Law from the test current and the measure voltage drop. MIL-DTL-3786, MIL-S-6807 and MIL-S-8805 require a maximum open circuit test voltage of 2 Vdc; they require a test current of 100 milliamperes. MIL-S-83504 requires a maximum test voltage of 50 millivolts and a test current of 10 milliamperes.

When a switch is rated to make and break 5 or more amperes, there is a difference. Contact resistance is determined by measuring the voltage drop while the switch is carrying the maximum rated current.

The voltage drop that occurs across the contacts determines, in part, the contact temperature. If the temperature rise of the contacts is sufficient, it affects contact material. A chemical reaction will take place that can cause an insulating film to appear on the contacts. This film is present between the contacts during the next switching operation. This film formation can cause failure due to increasing contact resistance. For switching of very low voltages and currents, this resistance may be the failure criteria.

Insulation Resistance

This is the resistance between two normally insulated metal parts, such as a pair of terminals. It is measured at a specific high DC potential, usually 100 Vdc or 500 Vdc. Typical values for new switches are in the range of thousands of megohms. These values usually decrease during switch life. This is a result of build-up of surface contaminants. Typical industry standard "end of life" criteria for the parameter are:

MIL-DTL-3786:	1000 megohms (for plastic insulation)
MIL-S-6807:	Not specified
MIL-S-8805:	2000 megohms
MIL-S-83504:	1000 megohms

Another special test condition is commonly specified. It measures insulation resistance for switches in a high humidity atmosphere (90%-98% R.H.). In this condition, condensation of moisture commonly occurs on the surface of the insulating material. Some types of insulation will absorb varying amounts of moisture. This will normally lower the insulation resistance. Typical industry values for this condition are:

MIL-DTL-3786:	10 megohms (for plastic insulation)
MIL-S-6807:	3 megohms after drying
MIL-S-8805:	10 megohms (for plastic material)
MIL-S-83504:	10 megohms

Dielectric Strength

This is the ability of the insulation to withstand high voltage without breaking down. Typical values for new switches in this test are in excess of 1500 Vac RMS. During switch life, contaminants and wear products deposit on the surface of the insulation. This tends to reduce the dielectric withstanding voltage. In testing for this condition, a voltage considerably above rated voltage is applied. Then, the leakage current is measured at the end of life. Typical industry standard test voltages and maximum allowable leakage currents are as follows:

MIL-DTL-3786:	1000 Vac and 1 mA maximum leakage
MIL-S-6807:	600 Vac RMS after life 10 microamperes maximum leakage
MIL-S-8805:	1000 or 1000 plus twice working voltage (AC) RMS and 1mA maximum leakage
MIL-S-83504:	500 Vac and 1 mA maximum leakage
UL Standard:	900 Vac without breakdown (UL Standard (dependent on test)

Voltage breakdown is another method for describing the ability of the insulating material to withstand a high voltage. Voltage breakdown describes the point at which an arc is struck and maintained across the insulating surface with the voltage applied between the conducting members.

ADDITIONAL LIFE FACTORS

Effect of Loads

On any switch, an arc is drawn while breaking a circuit. This causes electrical erosion of the contacts. This erosion normally increases contact resistance and generates wear products. These wear products contaminate insulating surfaces. This reduces dielectric strength and insulation resistance.

The amount of this erosion is a function of current, voltage, power factor, frequency and speed of operation. The higher the current is, the hotter the arc and the greater the erosion. The higher the voltage is, the longer the arc duration and the greater the erosion.

Inductance acts as an energy storage device. This returns its energy to the circuit when the circuit is broken. The amount of erosion in an inductive circuit is proportionate to the amount of inductance. Industry standard test inductance as described in MIL-I-81023 is 140 millihenries. Other test loads include 250 millihenries and 2.8 henries.

Frequency can also affect erosion. The arcing ends when the voltage passes through zero. To a certain extent, the following is true. The higher the frequency, the sooner arcing ends, the lower the erosion.

The speed of operation affects the duration of the arc. Fast operation can extinguish the arc sooner. This reduces the erosion, unless the air within the switch is completely ionized.

Actuating Force

Rotational torque is the actuating force required to turn a rotary switch through the various positions. The actual torque or force required depends on the design of the switch. It varies widely from one design to another. See appropriate MIL Specs or manufacturers literature for typical industry values for specific designs.

When torque or force values are specified, it is customary to give a minimum and maximum value. During life, two offsetting factors may occur to change the initial value. Relaxation of spring members will tend to lower torque or force values. Wear or "galling" of mating surfaces, however, may tend to increase these values. Typical end of life specifications may require the switch to fall within the original range. Or, they may specify a maximum percentage change from original value. For example, "the rotational torque shall not change more than 50% from its initial value.

Effect of Ambient Temperature

Temperature extremes may affect switch performance and life. Very high temperatures may reduce the viscosity of lubricants. This allows them to flow out of bearing areas. This can hasten mechanical wear of shafts, detents, plungers, and cause early mechanical failure. Contact lubricants are sometimes used. Too little lubrication can result in a high rate of mechanical wear. Too much lubrication flowing from other bearing areas can adversely affect dielectric strength and insulation resistance.

Through careful design and selection of lubricants most manufacturers attempt to minimize these affects. Nevertheless, continual operation in high ambient temperatures will shorten the life of a switch regardless of design.

Extremely low ambient temperatures may also create problems. Low temperatures may cause an increase in the viscosity of the contact lubricant. Higher viscosity can delay or prevent the closing of contacts, causing high operating contact resistance. Under certain atmospheric conditions, ice may form on the contact surfaces. This also causes high and erratic contact resistance.

Neither of these conditions may materially reduce the life of the switch. However, it may cause unsatisfactory operation. If the voltage of the circuit is high enough, it can break down the insulating layer. Some current will flow through the high resistance contacts. A local heating action is created, which tends to correct the condition in a short period of time.

Switches with high contact pressures may minimize the low ambient temperature effect. This is particularly true if the application calls for switching signal level voltages and currents.

Effects of Altitude

In high altitudes, barometric pressure is lower. Low pressure reduces the dielectric strength of the air. The arc strikes at a lower voltage and remains longer. This increases contact erosion. Switches for use in high altitudes will therefore require de-rating in terms of loads and/or life.

Effects of Duty Cycle

Mechanical life testers cause accelerated life testing. Testers operate switches at a rate of approximately 10 cycles per minute. This rate is greatly in excess of normal manual operation in equipment. It constitutes a severe test of the switch.

Lubricants do not have an opportunity to redistribute themselves over the bearing surfaces at this duty cycle. The contact heating caused by arcing does not have a chance to dissipate.

Thus, the switch runs "hot", increased mechanical wear and contact erosion result. Your application probably requires manual operation of the switch with an attendant low duty cycle. If so, you can usually expect much longer switch life than is shown by the accelerated life laboratory life tests.

Conclusion

Remember, load and life ratings are based on manufacturers' selected references. They include accelerated life tests and an arbitrary set of application parameters and failure criteria. These parameters and criteria may not always fit your application.

Then how do you know if a switch will give reliable performance in your application?

How do you know if it will last the life of your equipment?
Ask the switch manufacturer. Grayhill, and most other reputable manufacturers have compiled vast quantities of test data. We are in a position to give a good estimate of a switch's performance in many nonstandard applications. You should provide the following data:

Expected Life:	in number of cycles
Load:	voltage, current, power factor, and frequency
Operation:	manual or mechanical, duty cycle
Application:	type of equipment
Environment:	altitude, ambient temperature range relative humidity, corrosive atmosphere, shock, vibration, etc.
Failure Criteria:	end of life contact resistance, dielectric strength, insulation resistance, etc.

With this information, we can usually estimate if a given switch is suitable for your application.

Soldering

What causes failure in a new switch after it has been installed? The principle failure is high contact resistance caused by solder flux on the contact surfaces. To avoid this, be sure to follow good soldering practices. Use the proper solder with the proper flux core, maintain the proper soldering temperature, use the proper soldering iron tip for the work, and never use liquid flux when soldering a switch.

Do not use solvent baths or washes with any unsealed electromechanical parts. Switches, unless they have been especially protected suffer badly. Solvents readily dissolve fluxes and carry them into the contact area of switches. A thin, hard flux coats the contact surface after the solvent evaporates. Additionally, solvents may dissolve and wash away lubricants in switches. Lubricant loss may prevent proper mechanical action.

Exercise similar precautions when you mount a switch to a printed circuit board. Maintain proper solder temperatures and follow proper cleaning techniques. Avoid subjecting these switches to lengthy solder baths. The excessive heat can deform the plastics.

RFI/EMI Shielding

Some applications require shielding against Radio Frequency Interference and/or Electro-Magnetic Interference. Experts feel that the most effective way to achieve shielding is to provide a conductive bridge across the component mounting hole. They also generally agree that there is no good method for testing shielding. So, the equipment manufacturers themselves must identify and solve specific problems. Component manufacturers can generally assist in the solution of shielding problems.

RFI/EMI testing is incorporated into MIL-DTL-3786 for rotary switches. Requirements are 1.0 ohm maximum dc resistance between the mounting bushing and operating shaft initially and 10.0 ohm maximum dc resistance following environmental and mechanical tests. Many equipment manufacturers feel they are satisfying their needs with a measurement of .025 to 10 ohms for the expected life of the switch. Under most circumstances, standard non-sealed switches pass the larger value easily. The lower value (.025 ohms) requires special attention and parts for compliance over the life of the switch.

Switch Selection

Whenever possible, use standard switches and contact configurations. Standards provide the greatest economy and the best delivery. When you need a deviation, it pays to consult with your suppliers as soon as possible. At the early stages of the design, there are many low cost options for achieving the results. At the late stages of design, some of the options may no longer be open. For example, size may be restricted. This might result in a more costly redesign.

Typical standard rotary options are as follows: coded contacts, homing rotor effect, progressively shorting contacts, PC mountable terminals, rotary switch spring return positions, and push-to-turn or pull-to-turn mechanisms.

Limited panel space may be solved by a concentric shaft rotary switch. It is two rotary switches, located one behind the other. There are other concentric shaft possibilities. A rotary switch can be combined with another component. These include a potentiometer, a pushbutton switch, and a mechanical element. The most cost effective design may be one of these concentric options. But, selection must be made at the outset of equipment design.

1. SELECT A FACTOR

FACTOR: Current Life Rating

All switches are rated to make and break at least 100 milliamperes for 10,000 cycles of operation. Rating becomes a matter of interpretation. Carefully review the Engineering Information on the previous pages. Ratings which assure a different life are possible; contact Grayhill.

	Single Deck Switch Series							Multi-Deck Switch Series				
	19	24	50/51	56	75	77	5000	08/09	42/44	43/54	53,57,59	71
25,000 Cycles At Load (Amps)	—	1	.050	—	—	.050	1	.250	1,3,5*	1,3,5*	—	.250
10,000 Cycles At Load (Amps)	—	—	.200	.200	.100	—	—	.500	1,3,5*	1,3,5*	.150, .250*	—
6,000 Cycles At Load (Amps, UL)	15	—	—	—	—	—	—	—	—	—	—	—

* Varies with angle of throw and style.

FACTOR: Size

Maximum Dimension In Inches (& Millimeters)	Single Deck Switch Series								Multi-Deck Switch Series							
	19	24	50	51	56	75	77	5000	08	09	42	44	53	57	59	71
Diameter, Behind Panel	2.280	1.015	.500	.561	.500	.298		1.015	.687	.750	1.015	1.170	1.350	1.190	1.190	.750
Length Behind Panel, 1 Deck	.950	.580	.698	.698	.355	.500		.470	.960	.960	1.025	1.025	.916	.916	.916	.760
Behind Panel, Add'l Deck	—	—	—	—	—	—	—	—	.268	.268	.346	.346	.329	.326	.326	.218
Diameter, Behind Panel	(57,9)	(25,8)	(12,7)	(14,2)	(12,7)	(7,6)	()	(25,8)	(17,4)	(19,0)	(25,8)	(29,7)	(34,3)	(30,2)	(30,2)	(19,0)
Length Behind Panel, 1 Deck	(24,1)	(14,7)	(17,7)	(17,7)	(9,0)	(12,7)	()	(11,9)	(24,4)	(24,4)	(26,0)	(26,0)	(23,3)	(23,3)	(23,3)	(19,3)
Behind Panel, Add'l Deck	—	—	—	—	—	—	—	—	(6,8)	(6,8)	(8,8)	(8,8)	(8,4)	(8,3)	(8,3)	(5,5)

* If multi-deck switch is needed, contact Grayhill.

FACTOR: Circuitry

Max. Positions 1 Deck (1Pole)*	Angle Of Throw	Maximum Decks**	Maximum Poles Per Deck***	Shorting Or Non-Shorting	Solder Lug Or PC	Series Number
24	15°	12	12	N or S	Solder	53
20	18°	12	10	N or S	Solder	59
16	22°30'	12	8	N or S	Solder	57
16	22°30'	1	2	N or S	Both	51
12	30°	12	6	N or S	Both	71
12	30°	12	6	N or S	Both	9
12	30°	12	6	N or S	Solder	44
12	30°	1	4	N or S	Both	51
12	30°	1	4	N or S	Both	56
11	30°	1	1	N	****	19
10	36°	12	2	N or S	Both	8
10	36°	12	2	N or S	Both	71
10	36°	12	2	N or S	Both	42
10	36°	1	2	N	PC	75/77
10	36°	1	2	N or S	Both	50
10	36°	1	2	N or S	Both	56
10	36°	1	1	N or S	Both	24
10	36°	1	1	N or S	Solder	5000
8	45°	12	4	N or S	Both	9
8	45°	12	4	N or S	Solder	44
8	45°	1	2	N	Both	50
6	60°	6	3	N	Both	9
6	60°	12	3	N	Solder	44
6	60°	1	2	N	Both	50
4	90°	12	2	N	Solder	44
4	90°	6	2	N	Both	9
4	90°	1	2	N	Both	50

* Maximum positions per pole depends on number of poles per deck.

** Based on 1 pole per deck. Number of decks is also limited by the total number of poles.

*** Limited by total number of poles per switch.
****Choice of Faston or Solder Lug terminals.

Specifications are subject to change. Please refer to the current datasheet on www.grayhill.com for the most current published specifications for this product.

Rotary Switch Standard Options

- Custom Switches With No Tooling Required
- Easily Ordered Specials

1. Dummy Terminal

Used as tie point, it is not an active switch position. Can be located at any specified position outside of active switch terminals. Priced as active position. Example, a three position switch with 2 dummy terminals would be priced as a five position switch.

2. Enlarged Wire Holes

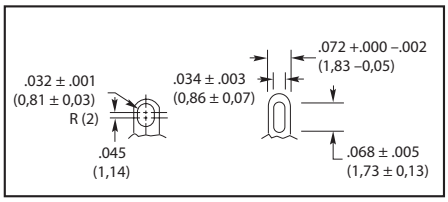

Series 08A, 09A, 42H, 42M, 44H, and 44M: Lug terminals for several wires; standard in Series 08M, 09M, 53, 57, and 59 switches.

3. High Density Wiring Terminal

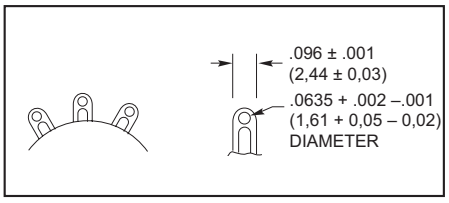

The gold-plated terminal features a slot to accept wires in addition to the conventional wire hole.

4. Taper Tab Terminals

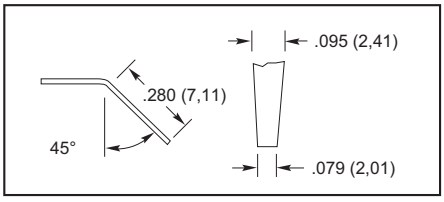

Used in place of conventional solder lug terminals. Taper tab terminals are gold plated.

5. Notched Terminals

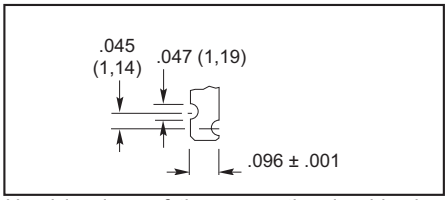

Used in place of the conventional solder lug terminals.

6. External Shorting Links

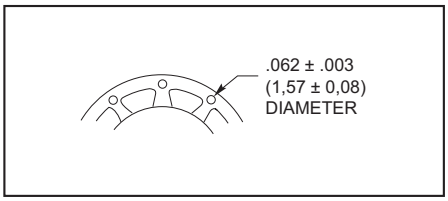

External shorting links, as shown in the drawing, can be used in place of conventional solder lug terminals in the Series 5000, 24, 42 or 43 rotary switches. Shorted terminals can also be accomplished internally in the Series 71 rotary switches. Solder lug terminals can be intermixed on the same deck.

7. Non-Standard, Non-Turn Devices

Switches without tabs

Series 08, 09, 42 and 44: There is no additional charge for a front support plate without a non-turn tab.

Non-turn tab of non-standard projection

Series 08:
All tabs located at .260 inch radius from centerline of switch. The following projections (inches) are available: .121; .094; .045; .032

Series 44:

From Centerline	Projection
.375" (9,53 mm)	.062" (1,57 mm)
.531" (13,49 mm)	.121" or .049" (3,07 or 1,24 mm)

8. RFI Grounding

A silver-plated shaft and wave washer improve DC grounding of shaft to mounting bushing, thus minimizing possible radio frequency interference. Example: static and dynamic DC resistance after 25,000 cycle life test is maximum 100 milliohms. For concentric shaft switches, discuss grounding with factory. Special handling charges apply to small lots.

9. Electrostatic, Electromagnetic Shielding

A metallic shield can be added between decks. Grounding of the shield provides additional RFV /EMI protection, Size and shape of the shield depends on the equipment configuration and the amount of protection required Price is dependant onthe number and type of shields required.

10. Unidirectional Rotation

The detenting system permits rotation in only one direction. Usable only with continuous rotation switches. Specify direction of rotation. Applicable to 30° and 36° throw switches only.

Switch Series#	Options For Styles A and S								Options For All Styles							
	1	2	3	4	5	6	7	8	9	10	11	12	13	14	15	16
08	x	x					x	x			x	x				
09	x	x					x	x			x	x				
24	x		x	x	x	x		x								
42	x	x*	x	x	x	x	x	x	x	x	x	x				
43	x		x	x	x	x		x*			x			x	x	
44	x	x*	x	x	x		x	x	x	x	x		x			
50/51								x			x					
56								x			x					
53/57/59								x								
54	x		x	x	x			x*			x			x	x	x
71								x*	x		x					
5000	x		x	x	x	x		x								

* See description below for limitations.

Patent Pending
©2013

Specifications are subject to change. Please refer to the current datasheet on www.grayhill.com for the most current published specifications for this product.

11. Intermixing of Shorting and Non-Shorting Contacts

In some switches, non-shorting and shorting contacts can be intermixed between decks. A 2-deck switch, for example could have shorting contacts on deck 1 and non-shorting contacts on deck 2. In a few switches, non-shorting and shorting contacts can also be intermixed between poles. A 2-pole per deck switch, for example, could have non-shorting on pole #1, and shorting on pole #2.

Series 08 and 09:
An 09M30 or 08M36 rotary switch can have shorting and non-shorting contacts intermixed between decks. Shorting and non-shorting contacts can be intermixed between poles as well as decks in styles A, S, P, and SP.

Series 42, 43, 44, and 54, in 30° or 36°:
Non-shorting and shorting contacts can be intermixed between poles or decks.

Series 50, 51, and 56:
Non-shorting and shorting contacts can be intermixed between poles.

Series 71:
Non-shorting and shorting contacts can be intermixed between poles in fixed stop switches only.

Priced the same as standard switches. The type of contacts on each pole must be precisely indicated.

12. PC Mount Switches With Terminals From One Side of Switch

Series 71 PC mount switch has all terminals on one side.

Series 08P, 09P, and 42P with non-shorting contacts are also available with terminals limited to one side. Contact Grayhill for a special part number. This is accomplished by using 2 decks per pole and placing the rotating contacts 180° out of phase on each deck. The first deck picks up the first half of the positions; the second deck picks up the last half of the positions. Common terminals are tied together by the PC board circuitry.

A total of 12 decks (6 usable poles) is the maximum per switch. Switches with the maximum number of positions (12 for 30°, or 10 for 36°) will have continuous rotation. Rotation can be limited to less than the maximum positions. For example, an 8 position Series 8P36 switch with terminals on one side, would pick up 5 positions on the first deck and 3 positions on the second deck.

Price is the same as standard switches with comparable number of decks and positions. Example: an 08P36, 1-pole, 10 position switch with terminals on one side of the switch would be priced as a 2 deck, five position, one pole per deck switch.

13. Homing Rotor (Bridging and Shorting Deck) and Progressively Shorting Deck - Series 44 only

A homing rotor (bridging and shorting) switch deck connects all terminals to the common except the terminal in the selected switch position. For example, in position 1, terminals 2 thru 12 are

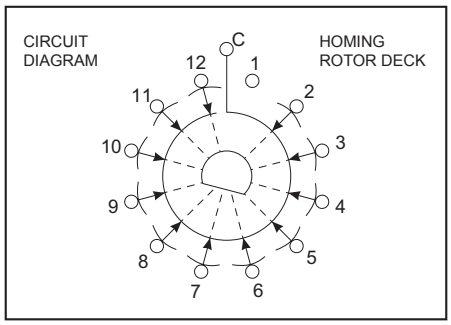

connected to the common, and terminal 1 is open. In position 2, terminal 3 thru 12 and 1 are connected to the common, and terminal 2 is open. A homing rotor deck will function for 25,000 mechanical cycles of operation.
The progressively shorting switch deck connects consecutive switch positions to the common. For example, in position 1, terminal 1 is connected to the common; in position

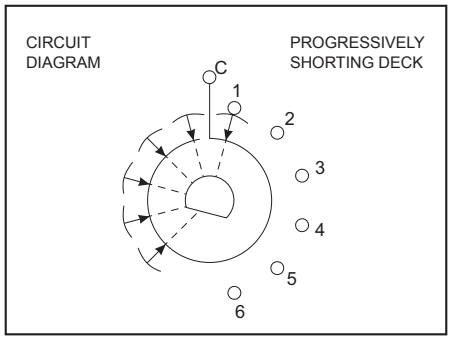

3, terminals 1,2, and 3 are connected to the common. A progressively shorting deck is limited to a maximum of 6 positions. A progressively shorting deck will function for 25,000 mechanical cycles of operation.

Homing Rotor or Progressively Shorting decks can be ordered as a deck of a 44A or 44M style switch, or their sealed equivalents. Order up to 11 conventional decks and 1 special circuitry deck. For a good detent feel, the switch is limited to a total of 12 poles plus the homing rotor or progressively shorting deck. Example: 6 2-pole decks and a homing rotor. When these special decks are used in combination with conventional decks, it is important to remember that the stop system limits the rotation of both types of decks. For example, when a homing rotor deck Is used in combination with a 6-position conventional deck, the homing rotor is likewise limited to six positions.

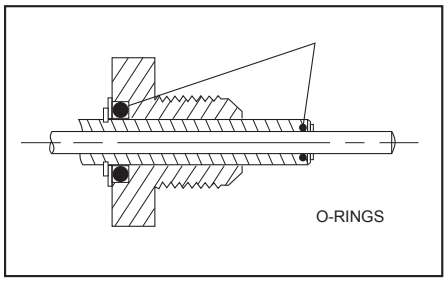

14. Shaft and Panel Seal on Concentric Shaft Switches

The following diagram shows the location of the O-rings required to seal the shafts to the bushings. When the concentric shaft switches are sealed in this manner, the .125 inch diameter shaft is supplied full round. Bushing-to-panel sealing is accomplished by the panel seal kit.

15. Fixed Stop, Add-A-Pot Switches

The rotary switch section of the Add-A-Pot rotary switches can be built with a fixed mechanism rather than the standard adjustable stop mechanism. The front end of a switch of this type is similar to the Series 43A or Series 54A style concentric rotary switches. The total number of decks is limited to three. The Series 43 is limited to 1 pole per deck. Series 54 to 2 poles per deck.

16. Series 54 Concentric Shaft Switch in 45°, 60°, and 90° Throws

The Series 54A switch is available with these angles of throw in Section A of the concentric rotary switch. Section B is available in 30° angle of throw only. Section A is limited to 1 to 3 decks, non-shorting contacts, and 1 or 2 poles per deck.