Specifications are subject to change. Please refer to the current datasheet on www.grayhill.com for the most current published specifications for this product.

FEATURES

- Transient Protection: Meets the requirements of IEEE 472, "Surge Withstanding Capability Test"
- UL, CSA, CE, TÜV Certified (TÜV not available on OpenLine)
- Optical Isolation
- OpenLine® and G5 Modules have Built-in Status LED
- Lifetime Warranty



70L-IAC 70G-IAC 70-IAC 70M-IAC

CIRCUITRY

Standard, Mini, G5

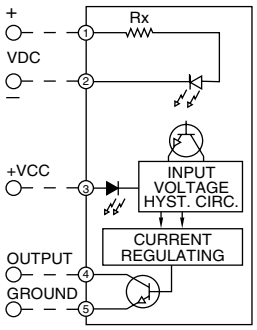

Status LED in G5 modules only.

OpenLine®

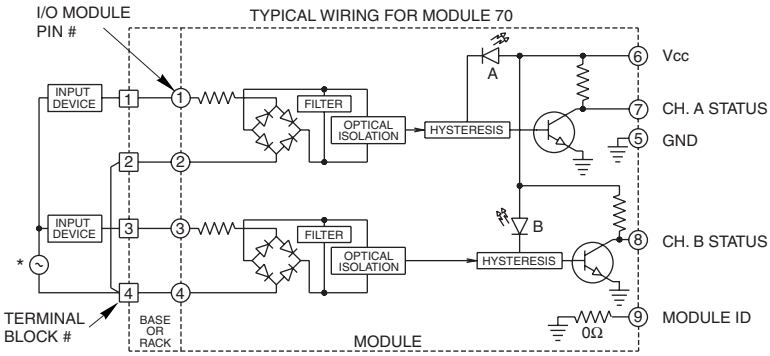

* Separate supplies may also be used.

SPECIFICATIONS: By Package Style

Package Style		Std (70-)	Mini (70M-)	G5 (70G-)	OL (70L-)
Specifications	**Units**				
Output Current Range	mA	1-50	1-50	1-50	1-50
Minimum Output Breakdown Voltage	Vdc	50	50	50	50
Maximum Turn-On Time	mS	20	20	20	20
Maximum Turn-Off Time	mS	20	20	20	20
Isolation Voltage[1]	Vrms	4000	4000	4000	2500
Vibration[2]		MIL-STD-202	MIL-STD-202	MIL-STD-202	IEC68-2-6
Mechanical Shock[3]		MIL-STD-202	MIL-STD-202	MIL-STD-202	IEC68-2-27
Storage Temp. Range	°C	-40 to +125	-40 to +125	-40 to +125	-40 to +100
Operating Temp. Range	°C	-40 to +100	-40 to +100	-40 to +100	-40 to +85
Warranty		Lifetime	Lifetime	Lifetime	Lifetime

[1] Field to logic and channel-to-channel if Grayhill racks are used.
[2] MIL-STD-202, Method 204, 20 G, 10-2000 Hz or IEC68-2-6, 0.15 mm/sec², 10-150 Hz.
[3] MIL-STD-202, Method 213, Condition F, 1500 G or IEC68-2-27, 11 mS, 15g.

Grayhill, Inc. • 561 Hillgrove Avenue • LaGrange, Illinois 60525-5997 • USA • Phone: 708-354-1040 • Fax: 708-354-2820 • www.grayhill.com

Specifications are subject to change. Please refer to the current datasheet on www.grayhill.com for the most current published specifications for this product.

SPECIFICATIONS: By Part Number

Standard and Miniature Modules

Type/Function		Grayhill Part Number					
Miniature		70M-IAC5	70M-IAC5A	70M-IAC15	70M-IAC15A	70M-IAC24	70M-IAC24A
Standard		70-IAC5	70-IAC5A		70-IAC15A	70-IAC24	70-IAC24A
Specifications	Units						
Nominal Input Voltage	Vac	120	240	120	240	120	240
Input Voltage Range[1]	Vac/Vdc	90-140	180-280	90-140	180-280	90-140	180-280
Input Current @ Maximum Input Voltage	mA, rms	8	6	8	6	8	6
Nominal Input Resistance (Rx)	W	22K	60K	22K	60K	22K	60K
Maximum Pick-Up Voltage (Output Low)	Vac	90	180	90	180	90	180
Minimum Drop-Out Voltage (Output High)	Vac	25	50	25	50	25	50
Nominal Logic Voltage (Vcc)	Vdc	5	5	15	15	24	24
Logic Voltage Range	Vdc	3-6	3-6	8-18	8-18	15-30	15-30
Max. Logic Supply Current @ Nominal Vcc	mA	10	10	10	10	10	10

G5 Modules

Type/Function		Grayhill Part Number					
G5, Status LED		70G-IAC5	70G-IAC5A	70G-IAC15	70G-IAC15A	70G-IAC24	70G-IAC24A
Specifications	Units						
Nominal Input Voltage	Vac	120	240	120	240	120	240
Input Voltage Range[1]	Vac/Vdc	90-140	180-280	90-140	180-280	90-140	180-280
Input Current @ Maximum Input Voltage	mA, rms	8	6	8	6	8	6
Nominal Input Resistance (Rx)	W	22K	60K	22K	60K	22K	60K
Maximum Pick-Up Voltage (Output Low)	Vac	90	180	90	180	90	180
Minimum Drop-Out Voltage (Output High)	Vac	25	50	25	50	25	50
Nominal Logic Voltage (Vcc)	Vdc	5	5	15	15	24	24
Logic Voltage Range	Vdc	4.5-6	4.5-6	10-18	10-18	17-30	17-30
Max. Logic Supply Current @ Nominal Vcc	mA	10	10	10	10	10	10

OpenLine® Modules

Type/Function		Grayhill Part Number	
Dual, Status LED		70L-IAC	70L-IACA
Specifications	Units		
Nominal Input Voltage	Vac	120	240
Input Voltage Range[1]	Vac/Vdc	0-140	0-280
Input Current @ Max. Input Voltage	mA, rms	8	6
Nominal Input Resistance (Rx)	W	22K	64K
Max. Pick-Up Voltage (Output Low)	Vac	90	180
Min. Drop-Out Voltage (Output High)	Vac	25	50
Nominal Logic Voltage (Vcc)	Vdc	5	5
Logic Voltage Range	Vdc	4.5-28	4.5-28
Max. Logic Supply Current @ Nominal Vcc	mA	6/CH	6/CH
Module ID Resistance to Logic Ground	W	0	0

Available from your local Grayhill Distributor. For prices and discounts, contact a local Sales Office, an authorized local Distributor or Grayhill.

[1] For input voltages in the range of 15-32 Vac, or 35-60 Vac, see DC input Modules with the NP or G suffix.

Specifications are subject to change. Please refer to the current datasheet on www.grayhill.com for the most current published specifications for this product.

I/O MODULES

Our line of pluggable input and output modules provide a low cost, versatile method for interconnecting real world analog and digital signals to data acquisition, monitoring, or control systems. All modules provide an optically isolated barrier between sensitive microprocessor or digital logic circuits and field power devices.

In the G5 and OpenLine® packages, analog **and** digital I/O modules are available with the same pin-out. This gives the flexibility of mixing and matching module types on the same mounting rack or base; making them perfect in applications which require interface to a variety of different sensors and loads.

The case color of the single point modules identify their function. The industry standard for single point I/O module case colors is:

Digital AC Output Module = Black Case
Digital DC Output Module = Red Case
Digital AC Input Module = Yellow Case
Digital DC Input Module = White Case

DIGITAL OUTPUT MODULES

Digital output modules are used to switch AC and DC loads such as solenoids, motors, or lamps from logic signal levels. Their inputs are directly compatible with TTL or CMOS interface circuitry.

AC output modules have zero voltage turn-on of the load to greatly reduce generated EMI and RFI. They are highly immune to electrical transients, and have built-in RC snubber networks for increased capability with inductive loads.

DC output modules can operate DC loads over a wide voltage range and have built-in voltage spike protection.

DIGITAL INPUT MODULES

Digital input modules are used to monitor the status of a load or a sensor (such as a limit switch, pressure switch, or temperature switch). The output of these modules is a logic level signal which corresponds to the status of the device being monitored. A high level output signal indicates the load is off (the switch is open). A low level output signal indicates the load is on (the switch is closed). Input modules are designed to give fast, clean switching by providing filtering and hysteresis.

Input and output modules are compatible in that the output of one can drive the input of the other.

UL, CSA AND CE APPROVALS

As one of the world's leading manufacturers of I/O modules, we strive to assure that our products comply with all of the applicable international standards. In doing so, we believe your products will also be readily accepted and easily certified. All modules shown in this section have been tested to UL Standard 508 and are documented in UL file number E58632. Similarly, they have been tested to CSA Standard 22.2 No. 14-95M and are documented in CSA file LR38763. Additionally, OpenLine® modules were tested and passed CSA 22.2 No. 213-M1987 Class I, Div. 2 Groups A, B, C and D. Parts bearing the CE logo indicate conformance with EN50082-2 and EN50081-2 (89/336/EEC EMC directive) as well as EN60950 (61010-1) for the low voltage directive. Contact Grayhill for copies of our Declaration of Conformity or visit out website. Parts bearing the TÜV logo indicate that they were the agency which performed the EN60950 evaluation.

CONSTRUCTION AND LIFETIME WARRANTY

All of our I/O modules are hard potted with thermally conductive epoxy to withstand harsh industrial environments. The modules provide optical isolation, immunity to mechanical shock and vibration, and operate over a wide temperature range. The module cases are a solvent resistant thermoplastic which meets UL94-V-0 rating. The terminal pins are a tin-plated copper wire. Component selection and surface mount construction allow low operating junction temperatures for long life. Superior design, rigorous testing, and field data give us the confidence to back our I/O modules with the industry's first lifetime warranty.

I/O MODULE WIRING

Analog and digital modules can be placed at any I/O location, however, to minimize the possibility of crosstalk and noise pickup it is a good practice to group similar module types together. 14 or 16 gauge wire is typically used to wire the field devices to the I/O rack terminal block.

PART NUMBER EXPLANATION: Digital I/O Modules

70M-ODC5A

Module Type
70 = Digital Module, Standard Package
70G = Digital Module, G5 Package
70L = Digital Module, OpenLine® Package
70M = Digital Module, Mini Package

Function
OAC = Digital Output AC
ODC = Digital Output DC
IAC = Digital Input AC
IDC = Digital Input DC

Suffix

AC Inputs:	Blank = 120 Vac	A = 220 Vac	
DC Inputs:	Blank = 3-32 Vdc	B = Fast Switching	NP = 15-32 Vac/10-32 Vdc
	G = 35-60 Vac/Vdc	D = 2.5–28 Vdc	K = 2.5-16 Vdc
	L = Inductive loads	S = Dry Contacts	
AC Outputs:	Blank = 120 Vac	A = 220 Vac	A-11 = Non-Zero Cross
	MA = 120 Vac, Manual Override	A-5 = Normally Closed	
	AMA = 240 Vac, Manual Override		
DC Outputs:	Blank = 3-60 Vdc Fast	A = 4-200 Vdc R = Dry Contact	
	MA = 3-60 Vdc, Manual Override	B = 3-60 Vdc, Low Leakage	

Logic Supply Voltage or Range
Digital Modules: Blank = 4.5-28 Vdc (OpenLine®)
5 Vdc, 15 Vdc, 24 Vdc = Logic Supply Voltage (Standard, Mini, G5)
Analog Modules: 4.75-5.25 Vdc

Grayhill, Inc. • 561 Hillgrove Avenue • LaGrange, Illinois 60525-5997 • USA • Phone: 708-354-1040 • Fax: 708-354-2820 • www.grayhill.com

Specifications are subject to change. Please refer to the current datasheet on www.grayhill.com for the most current published specifications for this product.

DIMENSIONS: OpenLine® Digital Modules

Dimensions shown in inches (and millimeters).
Tolerances are ± .010 (0,25) unless indicated otherwise.

Module Type	Output	Input
I/O Module Pin #	Function	Function
1	Output A+	Input A+
2	Output A-	Input A-
3	Output B+	Input B+
4	Output B-	Input B-
5	Logic Gnd	Logic Gnd
6	Vcc	Vcc
7	Ch. A Input	Ch. A Status
8	Ch. B Input	Ch. B Status
9	Module ID	Module ID

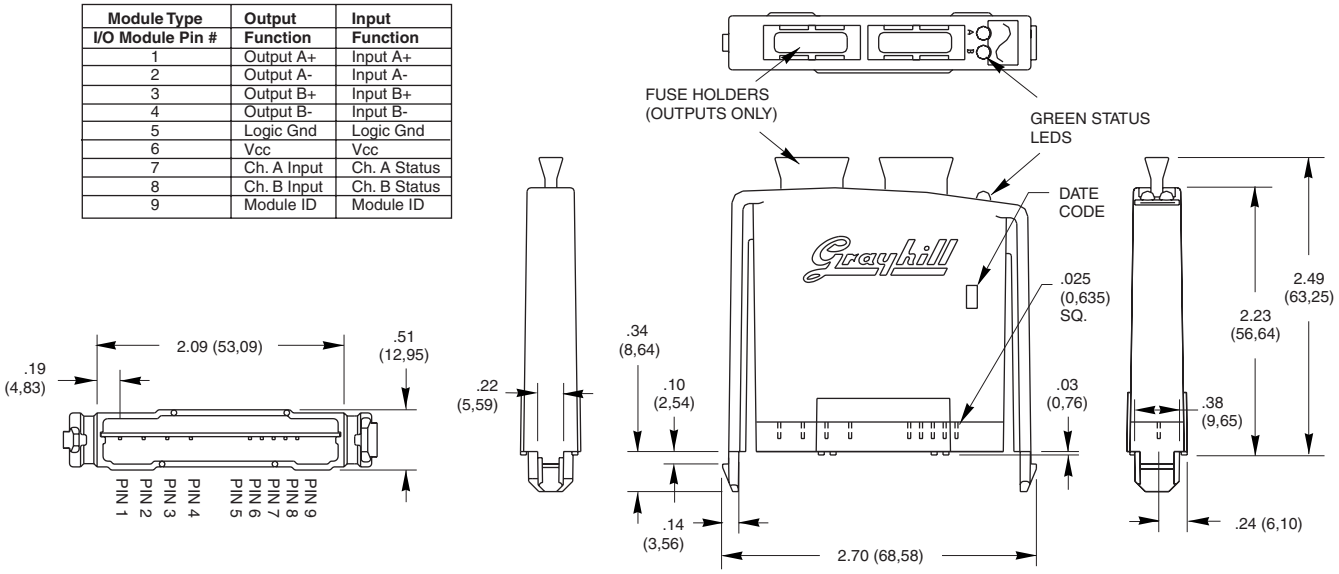

Note: For PC board layout information, request Bulletin #745

DIMENSIONS: G5 Digital Modules

Dimensions shown in inches (and millimeters).
Tolerances are ± .010 (0,25) unless indicated otherwise.

Input Modules

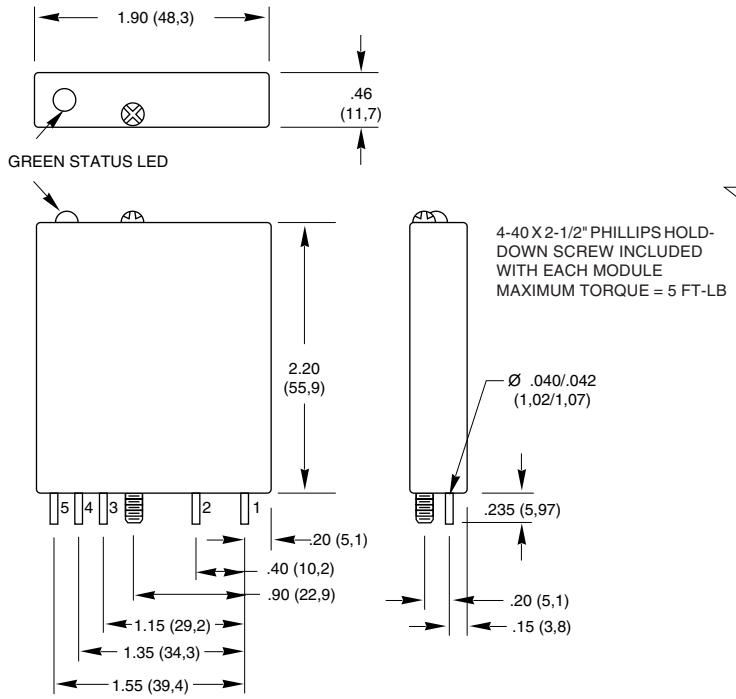

Ouput Modules

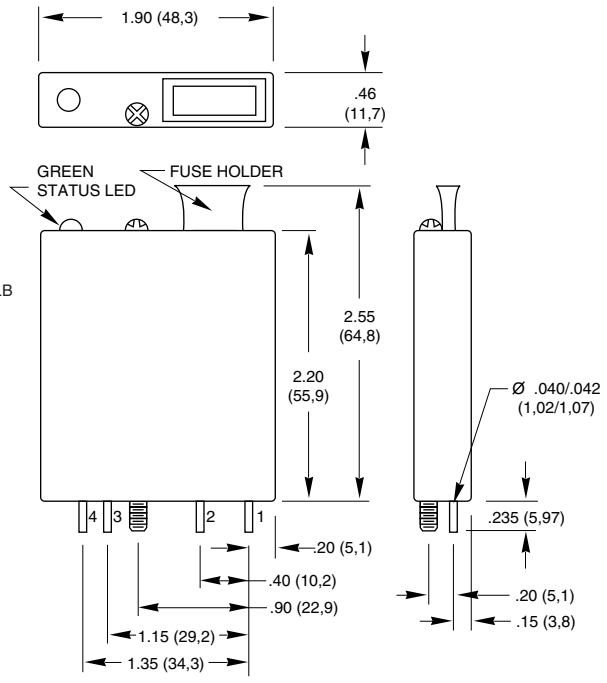

Specifications are subject to change. Please refer to the current datasheet on www.grayhill.com for the most current published specifications for this product.

DIMENSIONS: Standard and Miniature Digital Modules

Dimensions shown in inches (and millimeters).
Tolerances are ± .010 (0,25) unless indicated otherwise.

Standard Module

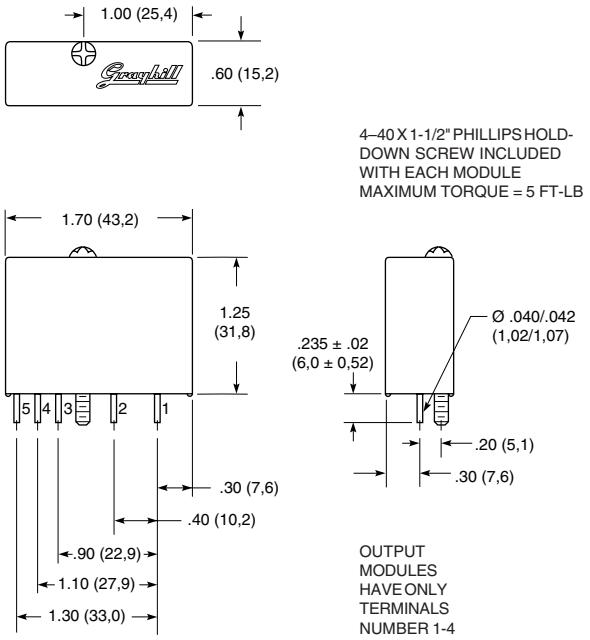

Miniature Module

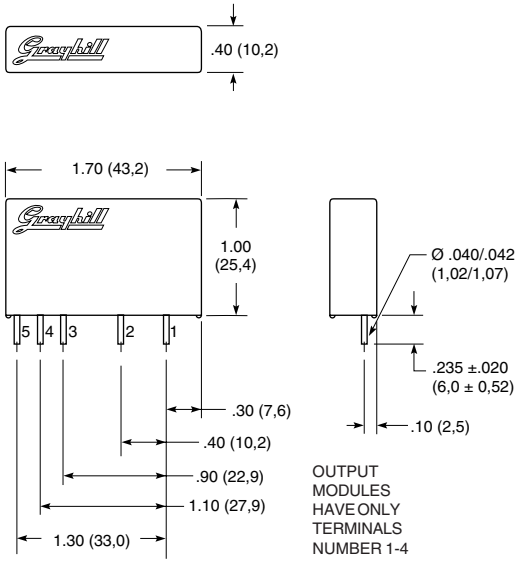

WIRING DIAGRAM: Digital I/O Modules

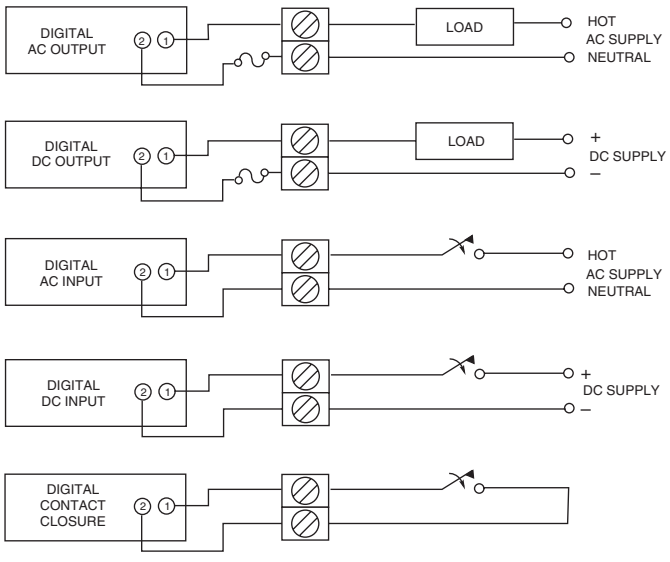

Grayhill, Inc. • 561 Hillgrove Avenue • LaGrange, Illinois 60525-5997 • USA • Phone: 708-354-1040 • Fax: 708-354-2820 • www.grayhill.com

Specifications are subject to change. Please refer to the current datasheet on www.grayhill.com for the most current published specifications for this product.

I/O MODULE SIZE



Miniature
Saves 35% Space



Standard
Compatible Industry Size



G5
Fused Outputs,
Integral LED



OpenLine®
Two Channel,
Fused Outputs,
Integral LED

FUNCTION

(Check Specifications for Input and Output combinations, Feature or Option availability.)



	Load	Control Vcc	Unique Options
Digital AC Output	120 Vac 220 Vac	5 Vdc 15 Vdc 24 Vdc 4.5-28 Vdc	Random Turn-on Normally Closed Manual Override Inductive Load



	Load	Control Vcc	Unique Options
Digital DC Output	60 Vdc 200 Vdc	5 Vdc 15 Vdc 24 Vdc 4.5-28 Vdc	Dry Contacts Manual Override



	Supply Vcc	Input Voltage	Unique Options
Digital AC Input	5 Vdc 15 Vdc 24 Vdc 4.5-28 Vdc	120 Vac 220 Vac	High DC Voltage Input



	Supply Vcc	Input Voltage	Unique Options
Digital DC Input	5 Vdc 15 Vdc 24 Vdc 4.5-28 Vdc	3 to 32 Vdc	10 to 32 Vdc/ 15 to 32 Vac 8 KHz Switching 35 to 60 Vac/Vdc Contact Closure