# 5000 series

Miniature toggle switches •
threaded bushing Ø 6.35 mm or plain bushing

## DISTINCTIVE FEATURES

17 actuators including toggles, paddle levers and locking levers in different lengths.

Various contact materials for low and high currents.

8 functions including maintained and momentary versions.

1 to 4 pole configurations.

12 terminal types including 9 for PC board mounting.
Other types include quick-connect and wire-wrap.

Several bushing styles.

3 types of finish including military black.

3 approvals (UL - CSA - CECC).

4 types of sealing for terminal or front panel requirements.

Numerous accessories available.

The company reserves the right to change specifications without notice.

# 5000 series

Miniature toggle switches •
threaded bushing Ø 6.35 mm or plain bushing

## ELECTRICAL SPECIFICATIONS

- Current/voltage rating with resistive load :

| Contact | Maximum | Minimum | Level* |
|---|---|---|---|
| Silver (A) | 4 A 30 VDC | 50 mA 10 VDC | III and IV |
| Silver, gold plated (AD) | 4 A 30 VDC<br>Gold plating withstands up to 100 mA 30 VDC | 10 mA 50 mV<br>10 µA 5 V | I to IV |
| Brass, gold plated (CD) | 0.4 VA at 20 VAC or DC | 10 mA 50 mV<br>10 µA 5 V | I and II |

*For details, see Technical Information on website.

- For inductive, lamp or capacitive load, consult factory.
- Initial contact resistance : 10 mΩ max.
- Insulation resistance : 1,000 MΩ min. at 500 VDC
- Dielectric strength :
  1,000 Vrms 50 Hz min. between terminals
  1,500 Vrms 50 Hz min. between poles
  1,500 Vrms 50 Hz min. between terminals and frame
- Contact bounce : 2 ms max.
- Electrical life at full load :
  50,000 cycles for single and double pole
  40,000 cycles for 3 pole
  30,000 cycles for 4 pole
- Low level or mechanical life : 100,000 cycles

## GENERAL SPECIFICATIONS

- Torque : 1.25 Nm (.922 Ft.lb) max. applied to nut
- Panel thickness : 2.5 mm (.098) with 2 nuts - 4 mm (.157) with 1 nut
- Operating temperature : -40 °C to +85 °C (-40 °F to +185 °F)

## AGENCY APPROVALS

CECC 96201-007

3 A 250 VAC, 6 A 125 VAC

For **VDE**, refer to 55000 series.
**NATO**
**Availability :** consult factory for details of approved models.

**Marking :** to order switches marked UL, CSA or CECC, complete appropriate box of ordering format. The preferential list does not appear on the switches.

## MATERIALS

- Case : diallylphthalate (DAP) or high temperature plastic material (UL94-V0)
- Actuator : brass, nickel plated
- Paddles : UL94HB polyamide
- Lever caps : vinyl
- Bushing : brass, nickel plated
- Housing : stainless steel or steel tin plated
- Contacts
  **A** : silver
  **AD** : silver, gold plated
  **CD** : brass, gold plated
  **X814** : for peak currrents, see "Special options".
- Terminal seal : epoxy

APEM products may be recycled at end-of-life for the re-claiming of valuable metal components.

# 5000 series

Miniature toggle switches •
threaded bushing Ø 6.35 mm or plain bushing

## TERMINALS

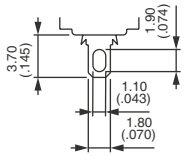


Solder lugs

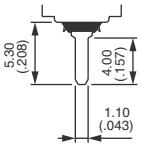


Straight PC

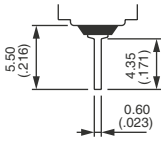


Straight PC

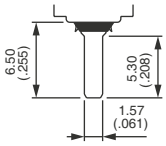


Quick-connect

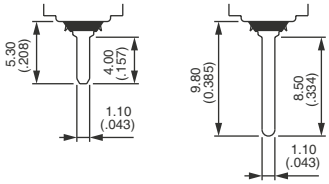


Straight PC bracket mounting

## ELECTRICAL FUNCTION

→ KEYWAY

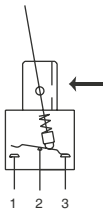


## PANEL CUT-OUT

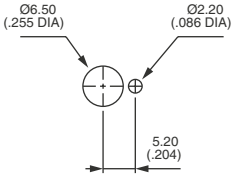


Standard

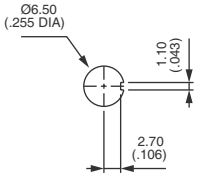


With **K** sealing option

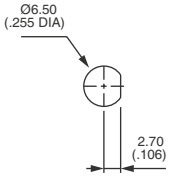


With **X408** sealing option

## PCB MOUNTING FOR RIGHT ANGLE TERMINAL MODELS

HORIZONTAL W

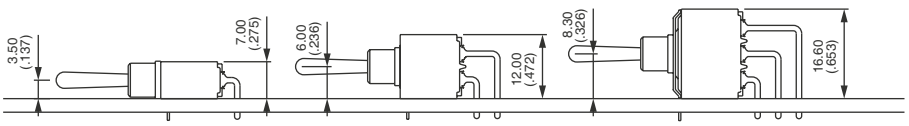


SP DP 3P

VERTICAL WW

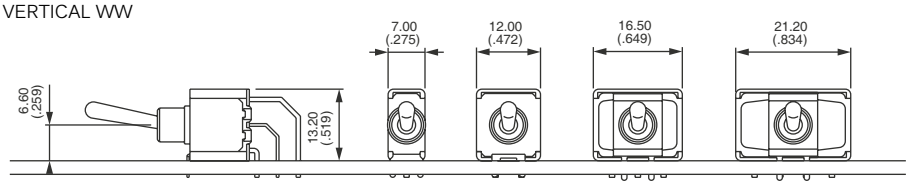


SP DP 3P 4P



APEM

# 5000 series

Miniature toggle switches •
threaded bushing Ø 6.35 mm or plain bushing

## BUILD YOUR PART NUMBER

BASIC PART NUMBER

5 | ___ | ___ | ___ | ___ | ___ | ___

### SERIES

### NUMBER OF POLES

| | |
|---|---|
| 3 | Single pole |
| 4 | Double pole |
| 5 | Three pole |
| 6 | Four pole |

### TERMINALS

| | |
|---|---|
| Blank | Solder lugs or straight PC depending on model |
| W | Right angle, horizontal mounting (5200 - 5400 switches) |
| WW | Right angle, vertical mounting (5200 - 5400 switches) |
| Y• | Bracket mounting (5200 switches) |
| Z | Quick-connect (5200 - 5900 switches) |

### MOMENTARY FOR FUNCTION 4

| | |
|---|---|
| 1R | ON ON MOM |
| 2R | MOM ON MOM |

### TERMINALS AND BUSHINGS

| | |
|---|---|
| 0 | Straight PC terminals, 5.08 (.200) terminal spacing |
| 2 | Straight PC terminals, 4.70 (.185) terminal spacing, right angle or quick-connect |
| 4 | Straight PC terminals, 4 (.157) terminal spacing or right angle terminals |
| 6 | Solder lug terminals |
| 7 | Solder lug terminals, with **flatted** bushing |
| 9 | Straight PC or quick-connect terminals, with **flatted** bushing, 4.70 (.185) terminal spacing |

Bushing Ø 6 (.236) x 0.75 IS also available as standard.

### ELECTRICAL FUNCTIONS

| | | | |
|---|---|---|---|
| 6 | ON | - | ON |
| 9 | ON | OFF | ON |
| 7 | MOM | OFF | MOM |
| 8 | ON | OFF | MOM |
| 2 | ON | - | MOM |
| 4 | ON | ON | ON |
| | ON | ON | MOM ▲ |
| | MOM | ON | MOM ▲ |

**Function 4**
Must not have blank in «connections» box.
▲ Must not have blank in «momentary» box.

### CONNECTIONS FOR FUNCTION 4

| | |
|---|---|
| TH | Standard |
| CT | Reversed |

For functions 4, 4-1R, 4-2R (leave blank for all other functions).
Wiring diagrams, see Technical information on website.

# 5000 series

## Miniature toggle switches • threaded bushing Ø 6.35 mm or plain bushing

### OPTIONS

#### FINISH

| | |
|---|---|
| Blank | Nickel plated |
| G | Black finish on bushing, actuator and hardware. |

#### FLUORESCENT TIP

| | |
|---|---|
| Blank | None |
| -038 | White fluorescent tip to lever |

Available with black finish (G) only.

#### SPECIAL OPTIONS

| | |
|---|---|
| X408 | Front panel sealing by two O-rings |

Other : see following pages.

#### CAPS

| Caps | Length |
|---|---|
| U270 | 11 (.433) |
| U1710 | 7.3 (.287) |

#### PADDLES FOR 4N (ORDER SEPARATELY)

| | |
|---|---|
| U240N | 12.6 (.496) |
| U290N | 20.00 (.787) |
| U390N | 21.4 (.842) |

#### CONTACT MATERIALS

| | |
|---|---|
| A | Silver |
| AD | Silver, gold plated |
| CD | Brass, gold plated |

For peak currents, see X814, under Special Options.

#### SEALING

| | |
|---|---|
| Blank | No sealing except where standard |
| K | Front panel sealing by one O-ring and sealing washer |
| B | Epoxy sealed terminals |

Sealing by two O-rings, see X408 under «Special options».

#### LEVERS

| Length with | threaded bushing | plain bushing |
|---|---|---|
| Blank (std) | 10.5 (.413) | 13.5 (.531) |
| -9 (flat) | 11.4 (.448) | - |
| -16 | 5.5 (.216) | 8.5 (.334) |
| -4N | 9 (.354) | 12 (.472) |

4N for use with paddle actuators only.

#### LOCKING LEVERS

| | |
|---|---|
| -1V | 1 locked position |
| -2V | 2 locked positions |
| -3V | 3 locked positions |

Other levers and locking levers, see following pages.

#### AGENCY APPROVALS

| | |
|---|---|
| UL, CSA, CECC | For VDE, refer to 55000 series. |

## ABOUT THIS SERIES

On the following pages, you will find successively basic part numbers of switches and options in the same order as in above chart.

**Notice :** please note that not all combinations of above numbers are available. Refer to the following pages for further information.

**Sealing boots** are available. See "Sealing Boots" section of website.

**Mounting accessories :** standard hardware supplied with all models with Ø 6.35 (1/4) or Ø 6 (.236) threaded bushing : 2 hex nuts 8 mm (.314) across flats, 1 locking ring and 1 lockwasher. Standard and special hardware is presented in the "Hardware" section of website.

# 5000 series

Miniature toggle switches • threaded bushing Ø 6.35 mm

## SOLDER LUG TERMINALS SINGLE POLE

| | III<br>2-3 | II | I<br>1-2 |
|---|---|---|---|
| 5636 | ON | - | ON |
| 5639 | ON | OFF | ON |
| 5637 | MOM | OFF | MOM |
| 5638 | ON | OFF | MOM |
| 5632 | ON | - | MOM |

→ KEYWAY

Shown with standard lever

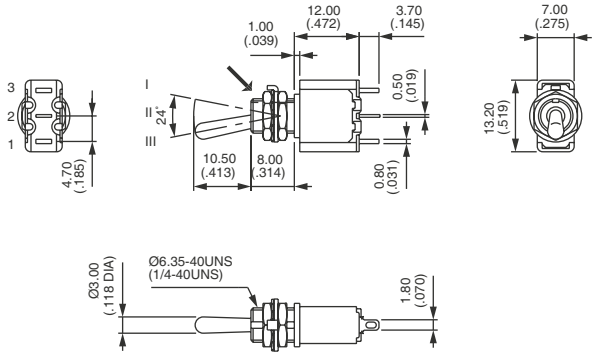


## SOLDER LUG TERMINALS DOUBLE POLE

| | III<br>2-3<br>5-6 | II | I<br>1-2<br>4-5 |
|---|---|---|---|
| 5646 | ON | - | ON |
| 5649 | ON | OFF | ON |
| 5647 | MOM | OFF | MOM |
| 5648 | ON | OFF | MOM |
| 5642 | ON | - | MOM |
| 5644* | ON | ON | ON |
| 5644 1R* | ON | ON | MOM |
| 5644 2R* | MOM | ON | MOM |

→ KEYWAY

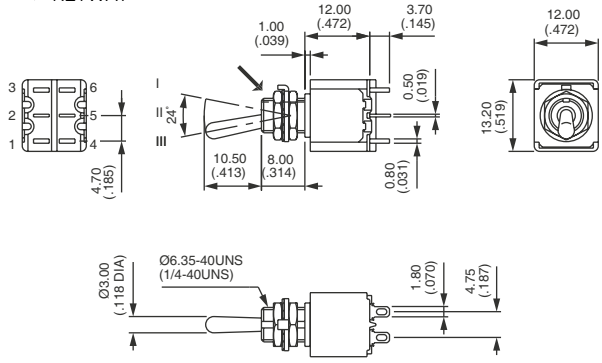


* Function 4 : SP in DP case - specify CT or TH connections.

## SOLDER LUG TERMINALS THREE POLE

| | III<br>2-3<br>5-6<br>8-9 | II | I<br>1-2<br>4-5<br>7-8 |
|---|---|---|---|
| 5656 | ON | - | ON |
| 5659 | ON | OFF | ON |
| 5657 | MOM | OFF | MOM |
| 5658 | ON | OFF | MOM |
| 5652 | ON | - | MOM |

→ KEYWAY

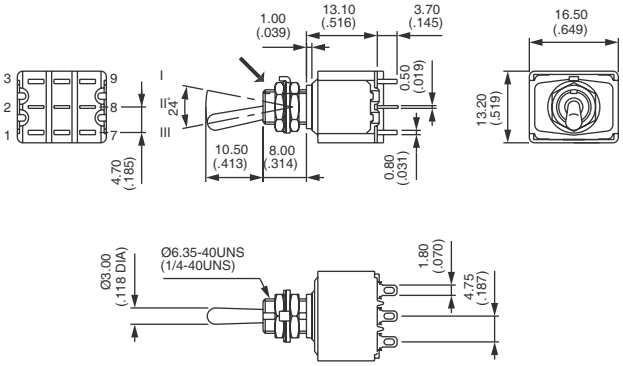


## SOLDER LUG TERMINALS FOUR POLE

| | III<br>2-3<br>5-6<br>8-9<br>11-12 | II | I<br>1-2<br>4-5<br>7-8<br>10-11 |
|---|---|---|---|
| 5666 | ON | - | ON |
| 5669 | ON | OFF | ON |
| 5667 | MOM | OFF | MOM |
| 5668 | ON | OFF | MOM |
| 5662 | ON | - | MOM |
| 5664* | ON | ON | ON |
| 5664 1R* | ON | ON | MOM |
| 5664 2R* | MOM | ON | MOM |

→ KEYWAY

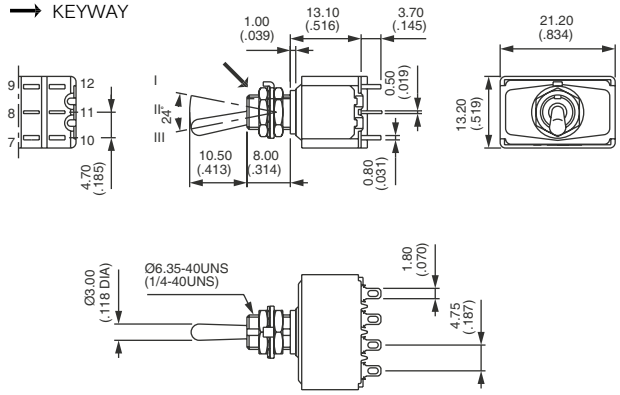


* Function 4 : DP in 4P case - specify CT or TH connections.

All models above also available with flatted bushing : **5700** or with dia. 6 mm x 0.75 SI (.236 x 0.75 IS) : **5500**.

# 5000 series

Miniature toggle switches •
threaded bushing Ø 6.35 mm or plain bushing

## STRAIGHT PC TERMINALS - SPACING 4.7 (.185) SINGLE POLE

| | III<br>2-3 | II | I<br>1-2 |
|---|---|---|---|
| 5236 B | ON | - | ON |
| 5239 B | ON | OFF | ON |
| 5237 B | MOM | OFF | MOM |
| 5238 B | ON | OFF | MOM |
| 5232 B | ON | - | MOM |

→ KEYWAY

Shown with standard lever

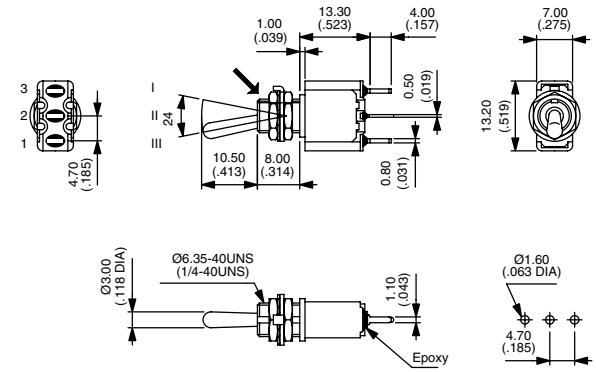


## STRAIGHT PC TERMINALS - SPACING 4.7 (.185) DOUBLE POLE

| | III<br>2-3<br>5-6 | II | I<br>1-2<br>4-5 |
|---|---|---|---|
| 5246 B | ON | - | ON |
| 5249 B | ON | OFF | ON |
| 5247 B | MOM | OFF | MOM |
| 5248 B | ON | OFF | MOM |
| 5242 B | ON | - | MOM |
| 5244 B* | ON | ON | ON |
| 5244 1R B* | ON | ON | MOM |
| 5244 2R B* | MOM | ON | MOM |

→ KEYWAY

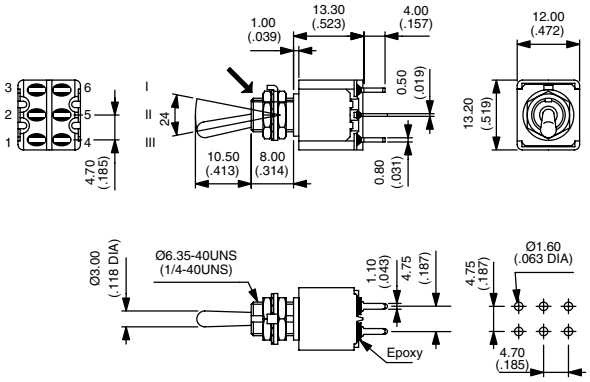


* Function 4 : SP in DP case - specify CT or TH connections.

## STRAIGHT PC TERMINALS - SPACING 4.7 (.185) THREE POLE

| | III<br>2-3<br>5-6<br>8-9 | II | I<br>1-2<br>4-5<br>7-8 |
|---|---|---|---|
| 5256 B | ON | - | ON |
| 5259 B | ON | OFF | ON |
| 5257 B | MOM | OFF | MOM |
| 5258 B | ON | OFF | MOM |
| 5252 B | ON | - | MOM |

→ KEYWAY

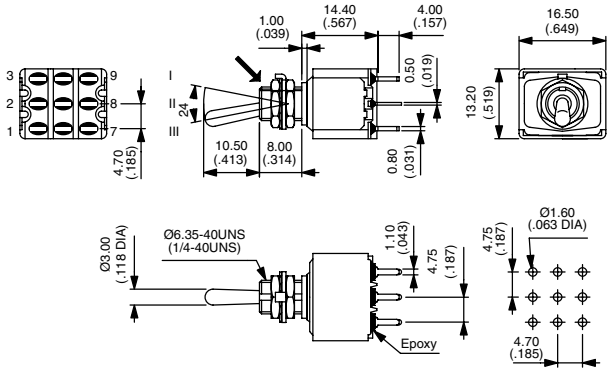


## STRAIGHT PC TERMINALS - SPACING 4.7 (.185) FOUR POLE

| | III<br>2-3<br>5-6<br>8-9<br>11-12 | II | I<br>1-2<br>4-5<br>7-8<br>10-11 |
|---|---|---|---|
| 5266 B | ON | - | ON |
| 5269 B | ON | OFF | ON |
| 5267 B | MOM | OFF | MOM |
| 5268 B | ON | OFF | MOM |
| 5262 B | ON | - | MOM |
| 5264 B* | ON | ON | ON |
| 5264 1R B* | ON | ON | MOM |
| 5264 2R B* | MOM | ON | MOM |

→ KEYWAY

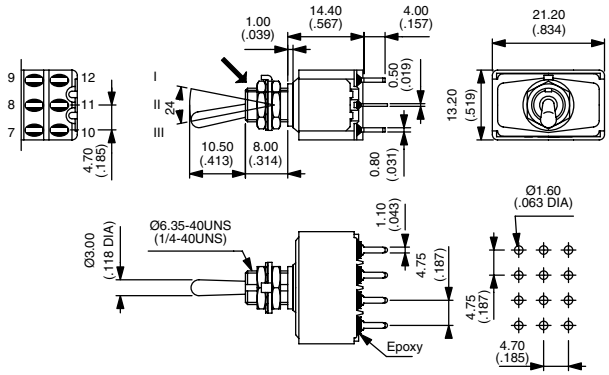


* Function 4 : SP in DP case - specify CT or TH connections.

All models above : Epoxy sealed terminals standard (B).
All models above also available with flatted bushing : **5900** or with terminal spacing 4 mm (.157) : **5400**.

# 5000 series

Miniature toggle switches •
threaded bushing Ø 6.35 mm or plain bushing

## STRAIGHT PC TERMINALS SPACING 5.08 (.200)

| Single pole | Double pole | III 2-3 5-6 | II | I 1-2 4-5 |
|---|---|---|---|---|
| 5036 B | 5046 B | ON | - | ON |
| 5039 B | 5049 B | ON | OFF | ON |
| 5037 B | 5047 B | MOM | OFF | MOM |
| 5038 B | 5048 B | ON | OFF | MOM |
| 5032 B | 5042 B | ON | - | MOM |
| | 5044* B | ON | ON | ON |
| | 5044 1R* B | ON | ON | MOM |
| | 5044 2R* B | MOM | ON | MOM |

Epoxy sealed terminals standard (B).

→ KEYWAY

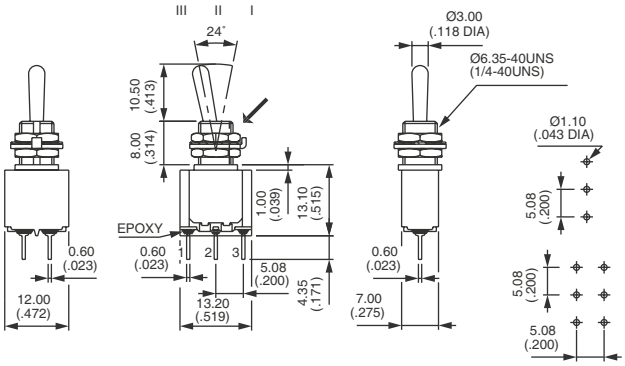


* Function 4 : SP in DP case - specify CT or TH connections.

## QUICK-CONNECT TERMINALS SINGLE POLE

| | III 2-3 | II | I 1-2 |
|---|---|---|---|
| 5236Z B | ON | - | ON |
| 5239Z B | ON | OFF | ON |
| 5237Z B | MOM | OFF | MOM |
| 5238Z B | ON | OFF | MOM |
| 5232Z B | ON | - | MOM |

Single and double pole models also available with flatted bushing : **5900Z**.
Epoxy sealed terminals standard (B).

→ KEYWAY

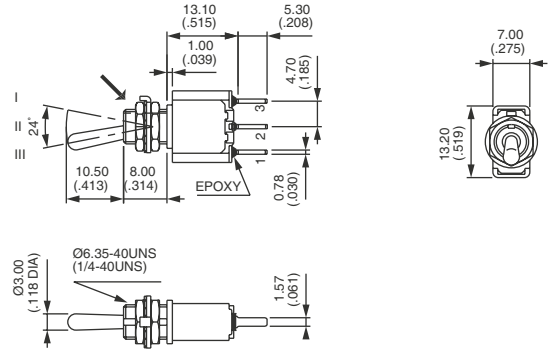


## QUICK-CONNECT TERMINALS DOUBLE POLE

| | III 2-3 5-6 | II | I 1-2 4-5 |
|---|---|---|---|
| 5246Z B | ON | - | ON |
| 5249Z B | ON | OFF | ON |
| 5247Z B | MOM | OFF | MOM |
| 5248Z B | ON | OFF | MOM |
| 5242Z B | ON | - | MOM |
| 5244Z* B | ON | ON | ON |
| 5244Z 1R* B | ON | ON | MOM |
| 5244Z 2R* B | MOM | ON | MOM |

Epoxy sealed terminals standard (B).

→ KEYWAY

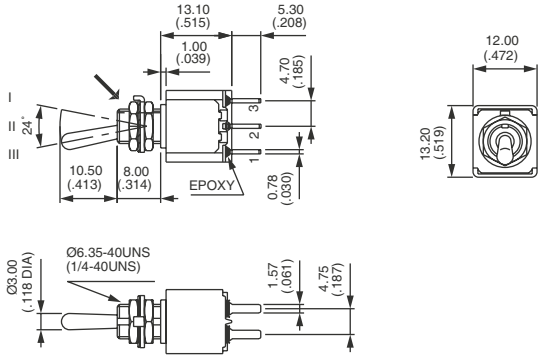


* Function 4 : SP in DP case - specify CT or TH connections.

## RIGHT ANGLE TERMINALS - HORIZONTAL SINGLE POLE

| | III 2-3 | II | I 1-2 |
|---|---|---|---|
| 5236W | ON | - | ON |
| 5239W | ON | OFF | ON |
| 5237W | MOM | OFF | MOM |
| 5238W | ON | OFF | MOM |
| 5232W | ON | - | MOM |

Also available with terminal spacing 4 mm (.157) instead of 4.7 (.185) : **5400W**.

→ KEYWAY

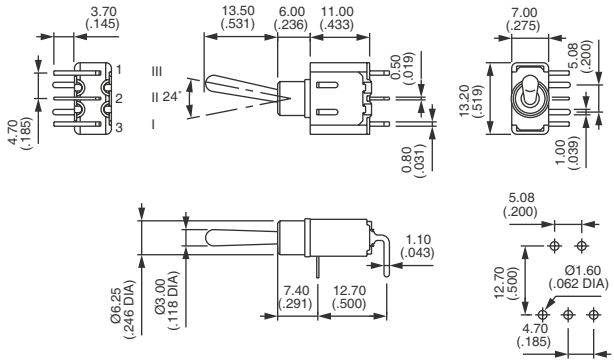




APEM

# 5000 series

## Miniature toggle switches • plain bushing

### RIGHT ANGLE TERMINALS - HORIZONTAL DOUBLE POLE

| | III<br>2-3<br>5-6 | II | I<br>1-2<br>4-5 |
|---|---|---|---|
| 5246W | ON | - | ON |
| 5249W | ON | OFF | ON |
| 5247W | MOM | OFF | MOM |
| 5248W | ON | OFF | MOM |
| 5242W | ON | - | MOM |
| 5244W* | ON | ON | ON |
| 5244W 1R* | ON | ON | MOM |
| 5244W 2R* | MOM | ON | MOM |

Also available with terminal spacing 4 mm (.157) instead of 4.7 (.185) : **5400W**.

Shown with standard lever

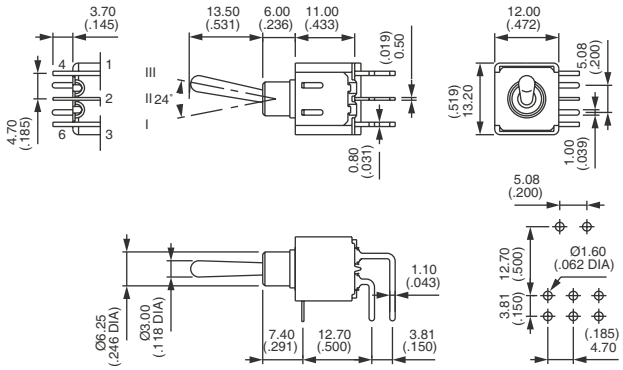


* Function 4 : SP in DP case - specify CT or TH connections.

### RIGHT ANGLE TERMINALS - HORIZONTAL THREE POLE

| | III<br>2-3<br>5-6<br>8-9 | II | I<br>1-2<br>4-5<br>7-8 |
|---|---|---|---|
| 5256W | ON | - | ON |
| 5259W | ON | OFF | ON |
| 5257W | MOM | OFF | MOM |
| 5258W | ON | OFF | MOM |
| 5252W | ON | - | MOM |

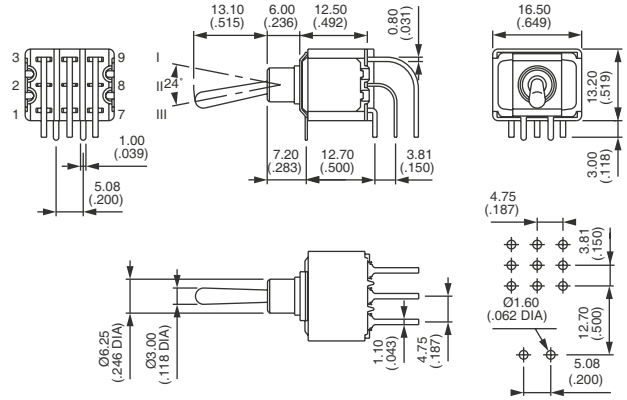


### RIGHT ANGLE TERMINALS - VERTICAL SINGLE POLE

| | III<br>2-3 | II | I<br>1-2 |
|---|---|---|---|
| 5236WW | ON | - | ON |
| 5239WW | ON | OFF | ON |
| 5237WW | MOM | OFF | MOM |
| 5238WW** | ON | OFF | MOM |
| 5232WW** | ON | - | MOM |

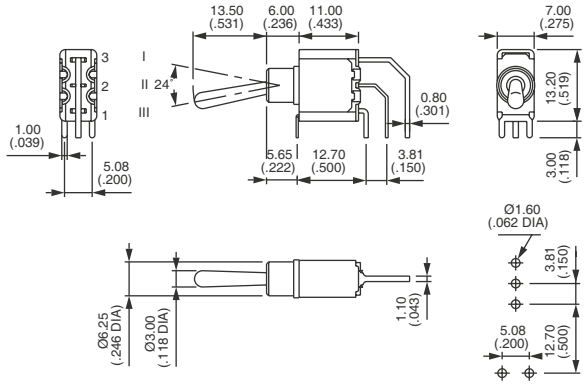


### RIGHT ANGLE TERMINALS - VERTICAL DOUBLE POLE

| | III<br>2-3<br>5-6 | II | I<br>1-2<br>4-5 |
|---|---|---|---|
| 5246WW | ON | - | ON |
| 5249WW | ON | OFF | ON |
| 5247WW | MOM | OFF | MOM |
| 5248WW** | ON | OFF | MOM |
| 5242WW** | ON | - | MOM |
| 5244WW* | ON | ON | ON |
| 5244WW 1R* | ON | ON | MOM |
| 5244WW 2R* | MOM | ON | MOM |

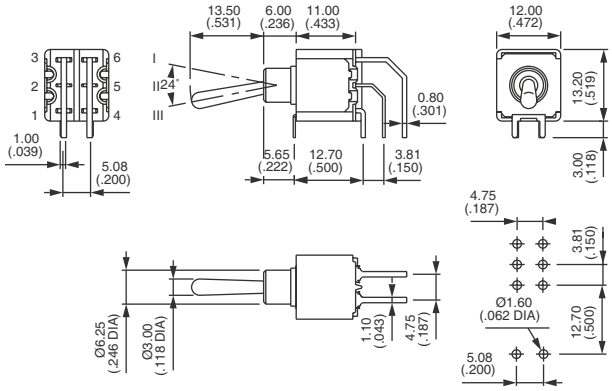


Vertical right angle models above : * Function 4 : SP in DP case, DP in 4P case - specify CT or TH connections.
** Functions 2 and 8 : reversed connection available, consult factory.
Also available with pin spacing 2.54 mm (.100) instead of 3.81 mm (.150) : **5400WW**

# 5000 series

## Miniature toggle switches • plain bushing

### RIGHT ANGLE TERMINALS - VERTICAL THREE POLE

| | III<br>2-3<br>5-6<br>8-9 | II | I<br>1-2<br>4-5<br>7-8 |
|---|---|---|---|
| 5256WW | ON | - | ON |
| 5259WW | ON | OFF | ON |
| 5257WW | MOM | OFF | MOM |
| 5258WW** | ON | OFF | MOM |
| 5252WW** | ON | - | MOM |

** Functions 2 and 8 : reversed connection available, consult factory.

Shown with standard lever

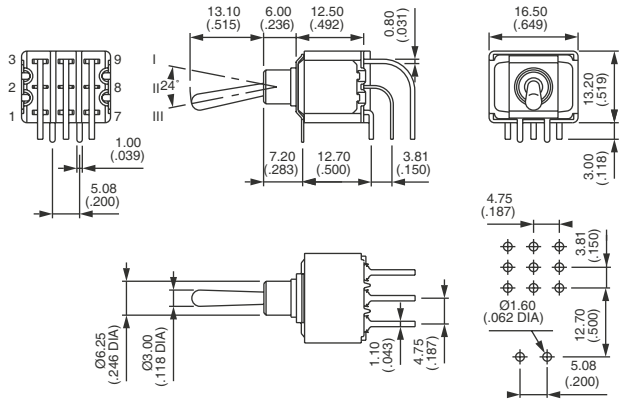


### RIGHT ANGLE TERMINALS - VERTICAL FOUR POLE

| | III<br>2-3<br>5-6<br>8-9<br>11-12 | II | I<br>1-2<br>4-5<br>7-8<br>10-11 |
|---|---|---|---|
| 5266WW | ON | - | ON |
| 5269WW | ON | OFF | ON |
| 5267WW | MOM | OFF | MOM |
| 5268WW** | ON | OFF | MOM |
| 5262WW** | ON | - | MOM |
| 5264WW* | ON | ON | ON |
| 5264WW 1R* | ON | ON | MOM |
| 5264WW 2R* | MOM | ON | MOM |

Vertical right angle models above also available with terminal spacing 2.54 mm (.100) instead of 3.81 mm (.150) : **5400WW**.

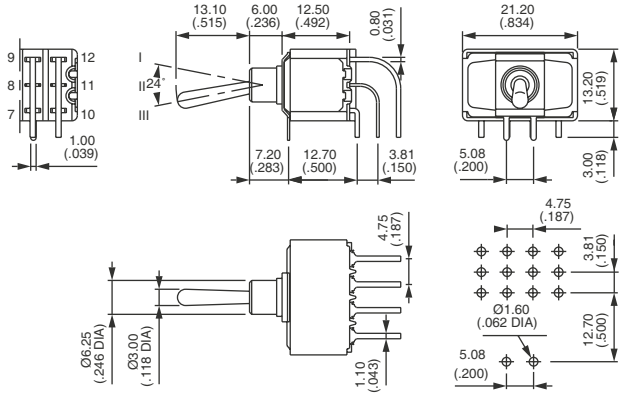


* Function 4 : SP in DP case, DP in 4P case - specify CT or TH connections.

### SHORT BRACKET - WIDTH 15.75 (.620) SINGLE POLE

| | III<br>2-3 | II | I<br>1-2 |
|---|---|---|---|
| 5236Y B | ON | - | ON |
| 5239Y B | ON | OFF | ON |
| 5237Y B | MOM | OFF | MOM |
| 5238Y B | ON | OFF | MOM |
| 5232Y B | ON | - | MOM |

Epoxy sealed terminals standard (B).

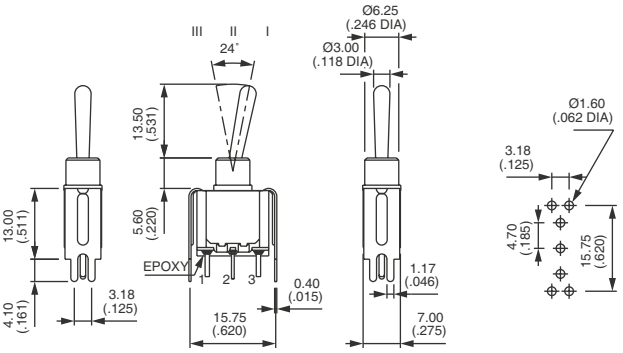


### SHORT BRACKET - WIDTH 15.75 (.620) DOUBLE POLE

| | III<br>2-3<br>5-6 | II | I<br>1-2<br>4-5 |
|---|---|---|---|
| 5246Y B | ON | - | ON |
| 5249Y B | ON | OFF | ON |
| 5247Y B | MOM | OFF | MOM |
| 5248Y B | ON | OFF | MOM |
| 5242Y B | ON | - | MOM |
| 5244Y B* | ON | ON | ON |
| 5244Y 1R B* | ON | ON | MOM |
| 5244Y 2R B* | MOM | ON | MOM |

Epoxy sealed terminals standard (B).

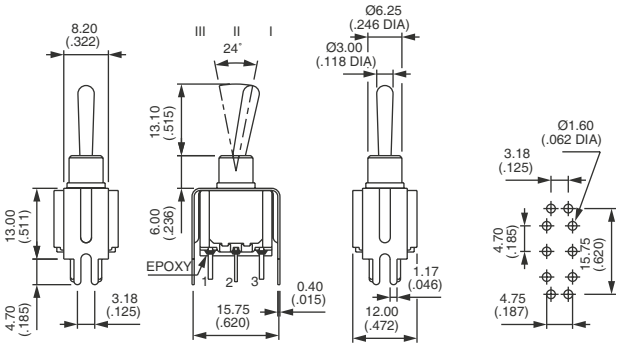


*Function 4 : SP in DP case - specify CT or TH connections.

# 5000 series

## Miniature toggle switches • plain bushing

### TALL BRACKET - WIDTH 15.75 (.620)

| Single pole | Double pole | III 2-3 5-6 | II | I 1-2 4-5 |
|---|---|---|---|---|
| 5236Y4 B | 5246Y4 B | ON | - | ON |
| 5239Y4 B | 5249Y4 B | ON | OFF | ON |
| 5237Y4 B | 5247Y4 B | MOM | OFF | MOM |
| 5238Y4 B | 5248Y4 B | ON | OFF | MOM |
| 5232Y4 B | 5242Y4 B | ON | - | MOM |
| | 5244Y4 B* | ON | ON | ON |
| | 5244Y4 1R B* | ON | ON | MOM |
| | 5244Y4 2R B* | MOM | ON | MOM |

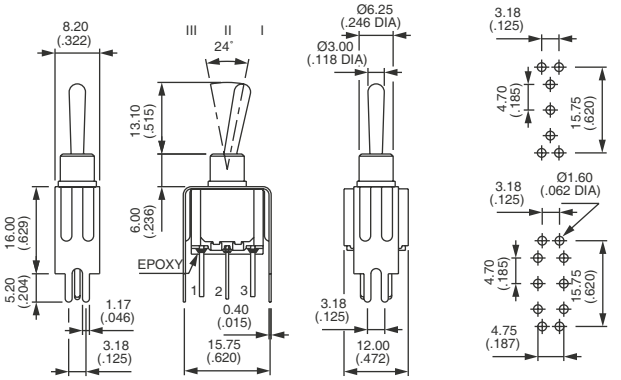


### SHORT BRACKET - WIDTH 19.05 (.750)

| Single pole | Double pole | III 2-3 5-6 | II | I 1-2 4-5 |
|---|---|---|---|---|
| 5236Y6 B | 5246Y6 B | ON | - | ON |
| 5239Y6 B | 5249Y6 B | ON | OFF | ON |
| 5237Y6 B | 5247Y6 B | MOM | OFF | MOM |
| 5238Y6 B | 5248Y6 B | ON | OFF | MOM |
| 5232Y6 B | 5242Y6 B | ON | - | MOM |
| | 5244Y6 B* | ON | ON | ON |
| | 5244Y6 1R B* | ON | ON | MOM |
| | 5244Y6 2R B* | MOM | ON | MOM |

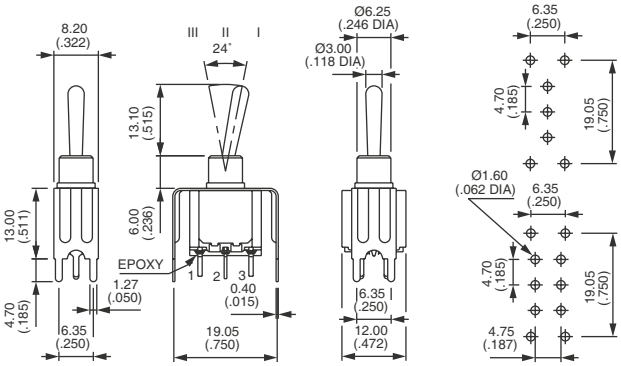


### TALL BRACKET - WIDTH 19.05 (.750)

| Single pole | Double pole | III 2-3 5-6 | II | I 1-2 4-5 |
|---|---|---|---|---|
| 5236Y7 B | 5246Y7 B | ON | - | ON |
| 5239Y7 B | 5249Y7 B | ON | OFF | ON |
| 5237Y7 B | 5247Y7 B | MOM | OFF | MOM |
| 5238Y7 B | 5248Y7 B | ON | OFF | MOM |
| 5232Y7 B | 5242Y7 B | ON | - | MOM |
| | 5244Y7 B* | ON | ON | ON |
| | 5244Y7 1R B* | ON | ON | MOM |
| | 5244Y7 2R B* | MOM | ON | MOM |

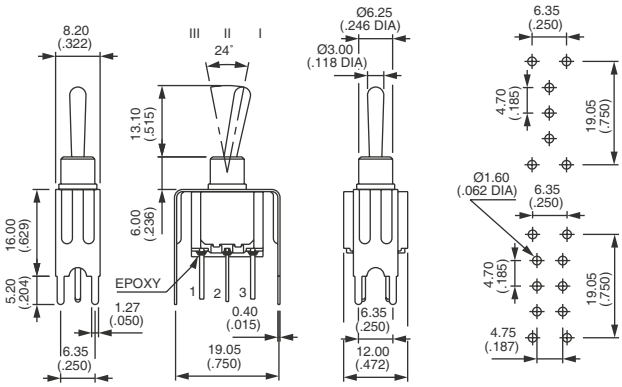


Epoxy sealed terminals standard (B).
* Function 4 : SP in DP case - specify CT or TH connections.

# 5000 series

## Miniature toggle switches • threaded bushing Ø 6.35 mm or plain bushing

### CONTACT MATERIALS

BASIC P/N

| | |
|---|---|
| **A** | Silver |
| **AD** | Silver, gold plated |
| **CD** | Brass, gold plated |

Special contacts for peak currents : see X814, under “Special Options”.

### FINISH

BASIC P/N

| | |
|---|---|
| **Blank** | Nickel plated |
| **G** | Black finish on bushing, actuator and hardware |

### SEALING

BASIC P/N

**Blank**
- For 5000 and 5200Z models : epoxy sealed terminals standard
- Other models : no sealing required

**K** Front panel sealing by one O-ring and sealing washer. Protects the switch against water and dust. Panel seal withstands 1 bar pressure and remains sealed even when switch is operated.
(!) Available on models with Ø 6.35 (1/4) **threaded bushing only.**
Not available with levers 8, 9, 12, 22, 23.

**B** Epoxy sealed terminals

**KB** Combined sealings

Sealing by two O-rings, see X408 under "Special options".

OPTION B

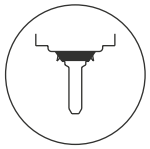

OPTION K

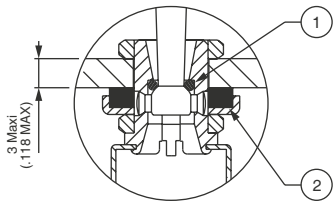


① O-ring

② Sealing washer

K with Ø 6.35 (1/4) keyway bushing includes washer **U360**

K with Ø 6.35 (1/4) flatted bushing includes washer **U5141**

### FLUORESCENT TIP

BASIC P/N

| | |
|---|---|
| **Blank** | None |
| **-038** | White fluorescent tip. Becomes luminous when submitted to ultraviolet rays. |

(!) Available with black finish (option G) only.
Consult factory for levers available with this option.

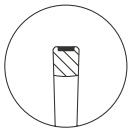

**-19**
Strandard lever

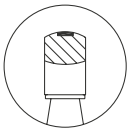

**Locking lever**

Same dimensions as standard actuator on next page.

# 5000 series

## Miniature toggle switches • threaded bushing Ø 6.35 mm or plain bushing

ACTUATORS

BASIC P/N

**Dash compulsory before lever code.**

LEVERS FOR THREADED BUSHING MODELS Ø 6,35 (1/4) OR Ø 6 (.236)

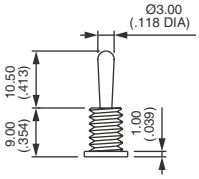


**Blank**
Standard

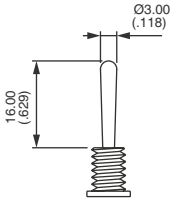


-2

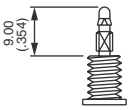


-4N *

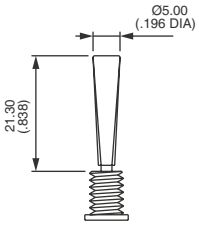


-8 **

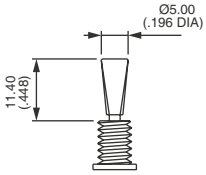


-9 **

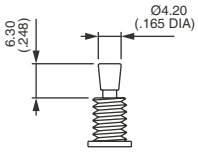


-12 **

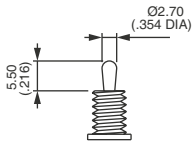


-16

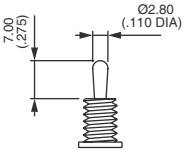


-17

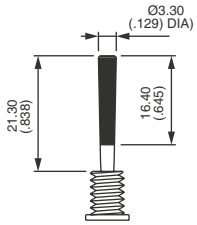


-21 (+U640) ***

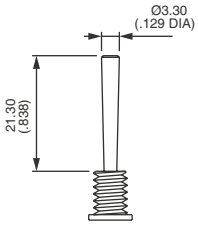


-22 **

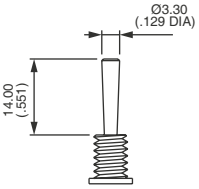


-23 **

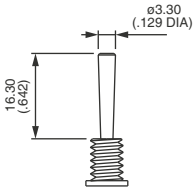


-25 **

* For use with paddles only
** Not available with sealing options K or X408
*** U640 to be placed in last box of ordering format.
Replace "**0**" by color code (see following pages)

LOCKING LEVERS FOR THREADED BUSHING MODELS Ø 6,35 (1/4)

**-1V** 1 locked position (function 6)
**-2V** 2 locked position (function 6)
**-3V** 3 locked positions (functions 9 and 4)

→ KEYWAY

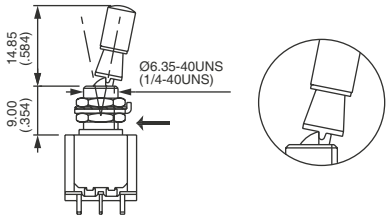


-1V

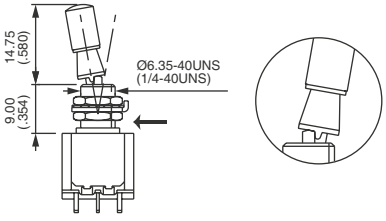


-2V

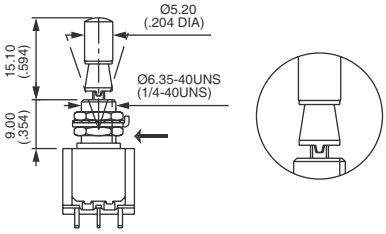


-3V

Consult factory for other locking lever options.
For plain bushing models, see X386 or X916 under “Special options” on the following pages.

# 5000 series

## Miniature toggle switches • threaded bushing Ø 6.35 mm or plain bushing

ACTUATORS
(CONTINUED)

BASIC P/N

LEVERS FOR PLAIN BUSHING MODELS : W - WW AND Y

Lever length : With bracket or mounting plate lever length will be reduced by 0.4 mm (.015) as a rule. Please refer to switch technical drawings of basic models pages for details.

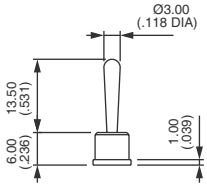


**Blank**
Standard

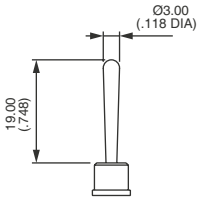


-2

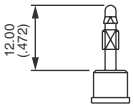


-4N

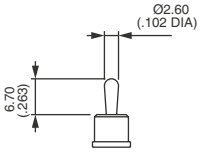


-7

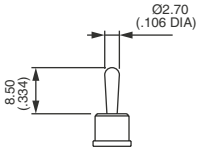


-16

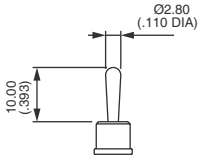


-17

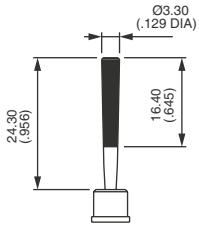


-21 (+U640) *

* U640 to be placed in last box of ordering format.
For actuator colors, replace «**0**» by color code (see following pages)

SPECIAL OPTIONS

BASIC P/N

**Blank** No special requirement

**X408** Front panel sealing by two O-rings. Flatted bushing for precise orientation. Protects the switch against water and dust. Panel seal withstands 1 bar pressure and remains sealed even when switch is operated. Includes sealed terminals (option B).
(!) Available only on models with threaded bushing. Not available with levers 8, 9, 12, 22, 23.

**X371** Plain bushing Ø 6.25 mm (.246) (instead of standard threaded bushing).

**X372** Threaded bushing Ø 6.35 (1/4). **Height 7 mm (.274).**

**X386** Threaded bushing Ø 6.35 mm (1/4) to replace plain bushing on models W - WW and Y.

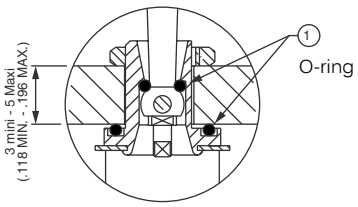


X408

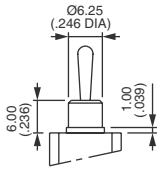


X371

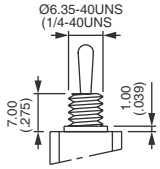


X372

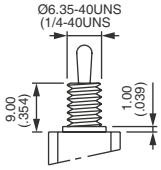


X386

# 5000 series

## Miniature toggle switches • threaded bushing Ø 6.35 mm or plain bushing

SPECIAL OPTIONS
(CONTINUED)

BASIC P/N

**X442** Threaded bushing Ø 6.35 mm (1/4) - **Height 9.9 mm (.389)**.

**X445** Plain bushing. **Height 7.2 mm (.283)** - for W, WW and Y models.
Available with the same levers, insulating cap and paddles as X404.`

**X601** **Silver plated brass contacts.**
Current/voltage rating for an electrical life of 20,000 cycles : 0.5 A 30 VDC. Minimum quantity : 5,000 pieces per model and shipment.

**X681** **Satin chrome** actuator

**X814** **Switches for peak currents** - single and double pole. On request.

**X902** Plain bushing Ø 6.25 mm (.246) - **Height 9 mm (.354)** (not available with K sealing option).

**X916** Locking lever on model with plain bushing.

**X404** **Horizontal right angle (W) with reduced overall dimensions** (shown with lever -16)

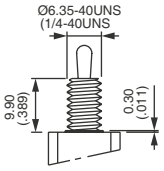

X442

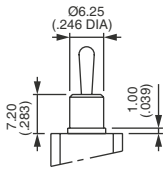

X445

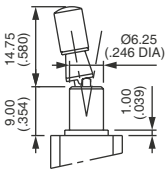

X916

With options X372, X386, X442 and X445, the lever lengths indicated on previous pages will be modified.

OPTION X404

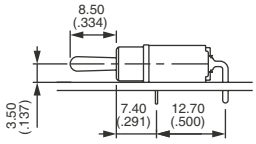

Standard W

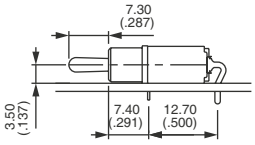

Option X404

| Single pole | Double pole | III 2-3 5-6 | II | I 1-2 4-5 |
|---|---|---|---|---|
| 5236W X404 | 5246W X404 | ON | - | ON |
| 5239W X404 | 5249W X404 | ON | OFF | ON |
| 5237W X404 | 5247W X404 | MOM | OFF | MOM |
| 5238W X404 | 5248W X404 | ON | OFF | MOM |
| 5232W X404 | 5242W X404 | ON | - | MOM |
| | 5244W X404* | ON | ON | ON |
| | 5244W 1R X404* | ON | ON | MOM |
| | 5244W 2R X404* | MOM | ON | MOM |

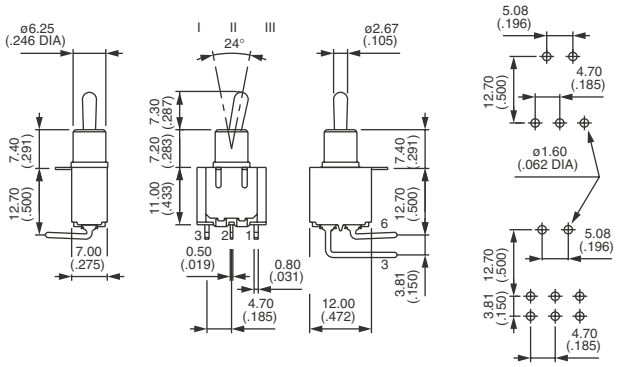


* Function 4 : SP in DP case - specify CT or TH connections

# 5000 series

## Miniature toggle switches • threaded bushing Ø 6.35 mm or plain bushing

SPECIAL OPTIONS
(CONTINUED)

BASIC P/N

OPTION X404 (CONTINUED)
LEVERS LENGHTS FOR X404 (ALSO AVAILABLE WITH X445 OPTION)

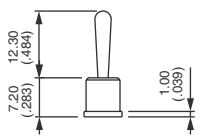


-13

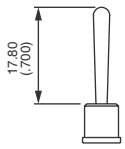


-2

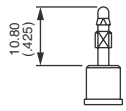


-4N *

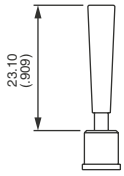


-8 **

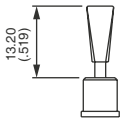


-9 **

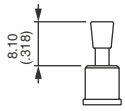


-12 **

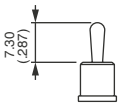


-16

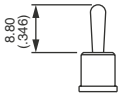


-17

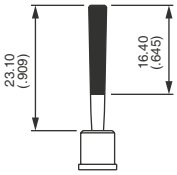


-21 (+U640) ***

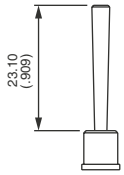


-22

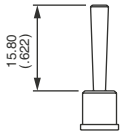


-23

* For paddles
** Levers -8, -9 and -12 not available with function 2 (ON-MOM)
*** U640 to be placed in last box of ordering format. Replace "0" with color code.

**Insulating caps and paddles for X404 :**
Insulating cap U1710 available with lever style 16.
Paddles U240N, U290N and U390N available with lever style 4N. See details on next page..

AGENCY APPROVALS

BASIC P/N

| | |
|---|---|
| **Blank** | No agency approval required. |
| **UL** | All standard models |
| **CSA** | |
| **CECC** | Standard models 5600 - 5200 |

**Availability** : consult factory for details of approved combinations or options.

**Marking** : to order switches marked UL, CSA or CECC, complete above box with desired approvals, in this order & without space (ex. : ULCSACECC). **VDE (with UL & CSA)** : Refer to 55000 series.

Preferential lists : see specifications.

# 5000 series

## Miniature toggle switches • threaded bushing Ø 6.35 mm or plain bushing

### INSULATING CAPS

BASIC P/N

| | |
|---|---|
| **U270** | For standard lever & threaded bushing only |
| **U1040** | For standard lever & plain bushing only |
| **U1710** | For lever 17 and threaded bushing<br>For lever 7 and plain bushing |

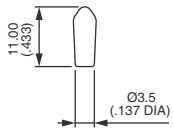


U270

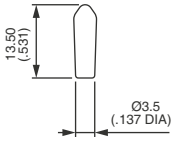


U1040

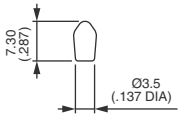


U1710

For cap colors, replace "**0**" with number :

| | |
|---|---|
| **1** | Blue |
| **1/4** | Dark blue |
| **2** | Black |
| **3** | Green |
| **4** | Grey |
| **5** | Yellow |
| **6** | Red |
| **7/1** | White |
| **9** | Orange |

### PADDLES

**For use with lever 4N only.** Shown with standard threaded bushing. **Order separately.**

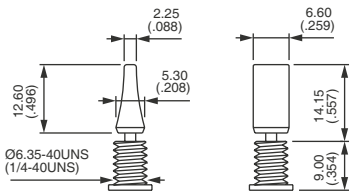


U240N

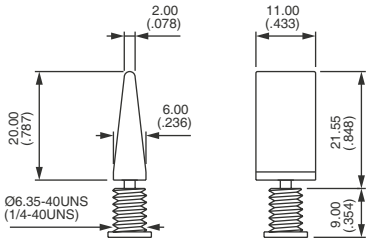


U290N

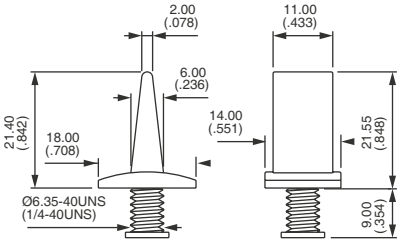


U390N

For cap colors, replace "**0**" with number :

| | |
|---|---|
| **1** | Blue |
| **1/4** | Dark blue |
| **2** | Black |
| **3** | Green |
| **4** | Grey |
| **5** | Yellow |
| **6** | Red |
| **7** | Ivory |
| **7/1** | White |
| **9** | Orange |