R52 (Miniature), Class X2, 310 VAC, 110°C (Automotive Grade)

Overview

The R52 series is constructed of metallized polypropylene film encapsulated with self-extinguishing resin in a box of material that meets the requirements of UL 94 V–0. The R52 Series is ideal for harsh environmental conditions and meets the demanding Automotive Electronics Council's AEC–Q200 qualification requirements.

Applications

For worldwide use in electromagnetic interference (EMI) suppression in across-the-line applications that require X2 safety classification. Intended for use in situations in which capacitor failure would not result in exposure to electric shock. Typical applications include connection in series with the mains, capacitive power supplies and energy meters, with special emphasis in automotive applications for severe ambient conditions.

Benefits

- Approvals: ENEC, UL, cUL, CQC
- X2 CLASS (IEC 60384-14)
- THB Grade IIB: 85°C, 85% RH, 500 hours at URAC acc. to IEC 60384-14
- Rated voltage: 310 VAC 50/60 Hz
- Capacitance range: 0.047 – 22 µF
- Lead spacing: 10.0 – 37.5 mm
- Capacitance tolerance: ±20%, ±10%
- Climatic category 40/110/56, IEC 60068-1
- Tape & Reel in accordance with IEC 60286-2
- RoHS compliant and lead-free terminations
- Operating temperature range of −40°C to +110°C
- 100% screening factory test at 1,900 VDC
- Self healing properties
- Automotive (AEC-Q200) grade

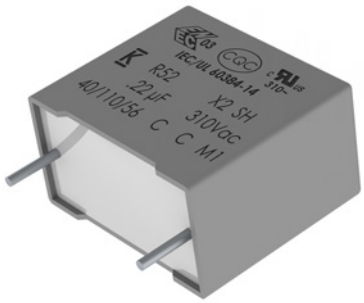

Simulator Tool and Lifetime Expectancy model available online:

K-SIM ***K-LEM***

Part Number System

R52	3	I	3470	00	P0	M
Series	Rated Voltage (VAC)	Lead Spacing (mm)	Capacitance Code (pF)	Packaging	Internal Use	Capacitance Tolerance
X2, Metallized Polypropylene	3 = 310	F = 10.0 I = 15.0 N = 22.5 R = 27.5 W = 37.5	The last three digits represent significant figures. The first digit specifies number of zeros to be added.	See Ordering Options Table	P0 P1 P2 P3	K = ±10% M = ±20%

© KEMET Electronics Corporation • One East Broward Boulevard
Fort Lauderdale, FL 33301 USA • 954-766-2800 • www.kemet.com

Ordering Options Table

Lead Spacing Nominal (mm)	Type of Leads and Packaging	Lead Length (mm)	Lead and Packaging Code
10 15 22.5	**Standard Lead and Packaging Options**		
	Bulk (Bag) – Short Leads	4 +2/-0	00
	Pizza Pack – Short Leads	4 +2/-0	BB
	Ammo Pack	H_0 = 18.5 ±0.5	DQ[1]
	Other Lead and Packaging Options		
	Tape & Reel (Large Reel)	H_0 = 18.5 ±0.5	CK
	Tape & Reel (Standard Reel)	H_0 = 18.5 ±0.5	GY[1]
	Bulk (Bag)[2] – Short Leads	2.7 +0.5/−0	JA
	Bulk (Bag)[2] – Short Leads	3.5 +0.5/−0	JB
	Bulk (Bag)[2] – Short Leads	4.0 +0.5/−0	JE
	Bulk (Bag)[2] – Short Leads	3.2 +0.3/−0.2	JH
	Bulk (Bag) – Long Leads	18 ±1	JM
	Bulk (Bag) – Long Leads	30 +5/−0	40
	Bulk (Bag) – Long Leads	25 +2/−1	50
27.5	**Standard Lead and Packaging Options**		
	Bulk (Tray) – Short Leads	4 +2/−0	00
	Pizza Pack – Short Leads	4 +2/-0	BB
	Tape & Reel (Large Reel)	H_0= 18.5 ±0.5	CK[1]
	Other Lead and Packaging Options		
	Bulk (Tray) – Short Leads	2.7 +0.5/−0	JA
	Bulk (Tray) – Short Leads	3.5 +0.5/−0	JB
	Bulk (Tray) – Short Leads	4.0 +0.5/−0	JE
	Bulk (Tray) – Short Leads	3.2 +0.3/−0.2	JH
	Bulk (Tray) – Long Leads	18 ±1	JM
	Bulk (Tray) – Long Leads	30 +5/−0	40
	Bulk (Tray) – Long Leads	25 +2/−1	50
37.5	**Standard Lead and Packaging Options**		
	Bulk (Tray) – Short Leads	4 +2/−0	00
	Pizza Pack – Short Leads	4 +2/-0	BB
	Other Lead and Packaging Options		
	Bulk (Tray) – Short Leads	2.7 +0.5/−0	JA
	Bulk (Tray) – Short Leads	3.5 +0.5/−0	JB
	Bulk (Tray) – Short Leads	4.0 +0.5/−0	JE
	Bulk (Tray) – Short Leads	3.2 +0.3/−0.2	JH
	Bulk (Tray) – Long Leads	18 ±1	JM
	Bulk (Tray) – Long Leads	30 +5/−0	40
	Bulk (Tray) – Long Leads	25 +2/−1	50

[1] Not for all sizes, see "Packaging Quantities" table.
*[2] For lead spacing 22.5 case sizes ≥ 8.5*17*26.5 the parts are packed in a Pizza box 335*320*34 mm*

Dimensions – Millimeters

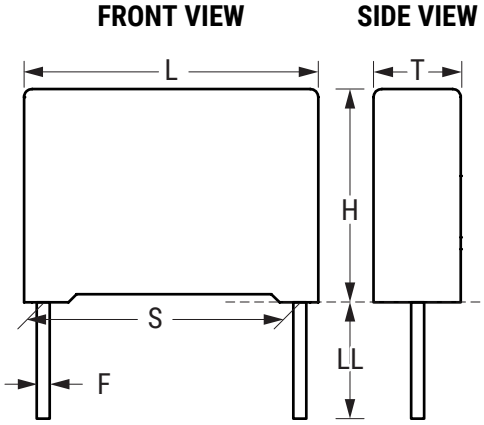

S		T		H		L		F	
Nominal	Tolerance	Nominal	Tolerance	Nominal	Tolerance	Nominal	Tolerance	Nominal	Tolerance
10.0	±0.4	4.0	+0.3/−0.5	9.0	+0.3/−0.5	13.0	+0.3/−0.5	0.6	±0.05
10.0	±0.4	5.0	+0.3/−0.5	11.0	+0.3/−0.5	13.0	+0.3/−0.5	0.6	±0.05
10.0	±0.4	6.0	+0.3/−0.5	12.0	+0.3/−0.5	13.0	+0.3/−0.5	0.6	±0.05
15.0	±0.4	5.0	+0.2/−0.5	11.0	+0.1/−0.5	18.0	+0.3/−0.5	0.6	±0.05
15.0	±0.4	6.0	+0.2/−0.5	12.0	+0.1/−0.5	18.0	+0.3/−0.5	0.6	±0.05
15.0	±0.4	7.5	+0.2/−0.5	13.5	+0.1/−0.5	18.0	+0.5/−0.5	0.6	±0.05
15.0	±0.4	7.5	+0.2/−0.5	18.5	+0.1/−0.5	18.0	+0.5/−0.5	0.8	±0.05
15.0	±0.4	8.5	+0.2/−0.5	14.5	+0.1/−0.5	18.0	+0.5/−0.5	0.6	±0.05
15.0	±0.4	9.0	+0.2/−0.5	12.5	+0.1/−0.5	18.0	+0.5/−0.5	0.6	±0.05
15.0	±0.4	10.0	+0.2/−0.5	16.0	+0.1/−0.5	18.0	+0.5/−0.5	0.8	±0.05
15.0	±0.4	11.0	+0.2/−0.5	19.0	+0.1/−0.5	18.0	+0.5/−0.5	0.8	±0.05
22.5	±0.4	7.0	+0.2/−0.5	16.0	+0.1/−0.5	26.5	+0.3/−0.5	0.8	±0.05
22.5	±0.4	8.5	+0.2/−0.5	17.0	+0.1/−0.5	26.5	+0.3/−0.5	0.8	±0.05
22.5	±0.4	10.0	+0.2/−0.5	18.5	+0.1/−0.5	26.5	+0.3/−0.5	0.8	±0.05
22.5	±0.4	11.0	+0.2/−0.5	20.0	+0.1/−0.5	26.5	+0.3/−0.5	0.8	±0.05
22.5	±0.4	13.0	+0.2/−0.5	22.0	+0.1/−0.5	26.5	+0.3/−0.5	0.8	±0.05
27.5	±0.4	9.0	+0.2/−0.7	17.0	+0.1/−0.7	32.0	+0.3/−0.7	0.8	±0.05
27.5	±0.4	11.0	+0.2/−0.7	20.0	+0.1/−0.7	32.0	+0.3/−0.7	0.8	±0.05
27.5	±0.4	13.0	+0.2/−0.7	22.0	+0.1/−0.7	32.0	+0.3/−0.7	0.8	±0.05
27.5	±0.4	14.0	+0.2/−0.7	28.0	+0.1/−0.7	32.0	+0.3/−0.7	0.8	±0.05
27.5	±0.4	16.0	+0.2/−0.7	30.0	+0.1/−0.7	32.0	+0.3/−0.7	0.8	±0.05
27.5	±0.4	18.0	+0.2/−0.7	33.0	+0.1/−0.7	32.0	+0.3/−0.7	0.8	±0.05
27.5	±0.4	22.0	+0.2/−0.7	37.0	+0.1/−0.7	32.0	+0.3/−0.7	0.8	±0.05
37.5	±0.4	11.0	+0.3/−0.7	22.0	+0.1/−0.7	41.5	+0.3/−0.7	1.0	±0.05
37.5	±0.4	13.0	+0.3/−0.7	24.0	+0.1/−0.7	41.5	+0.3/−0.7	1.0	±0.05
37.5	±0.4	16.0	+0.3/−0.7	28.5	+0.1/−0.7	41.5	+0.3/−0.7	1.0	±0.05
37.5	±0.4	19.0	+0.3/−0.7	32.0	+0.1/−0.7	41.5	+0.3/−0.7	1.0	±0.05
37.5	±0.4	20.0	+0.3/−0.7	40.0	+0.1/−0.7	41.5	+0.3/−0.7	1.0	±0.05
37.5	±0.4	24.0	+0.3/−0.7	44.0	+0.1/−0.7	41.5	+0.3/−0.7	1.0	±0.05
37.5	±0.4	30.0	+0.3/−0.7	45.0	+0.1/−0.7	41.5	+0.3/−0.7	1.0	±0.05

Note: See Ordering Options Table for lead length (LL/H_0) options.

Performance Characteristics

Dielectric	Polypropylene film			
Plates	Metal layer deposited by evaporation under vacuum			
Winding	Non-inductive type			
Leads	Tinned wire			
Protection	Plastic case, thermosetting resin filled. Box material is solvent resistant and flame retardant according to UL94.			
Related Documents	IEC 60384-14, EN 60384-14			
Rated Voltage V_R	310 VAC (50/60 Hz)			
Recommended DC Voltage	≤ 630 VDC			
Capacitance Range	0.047 – 22 µF			
Capacitance Values	E6 series (IEC 60063) measured at 1 kHz and +20 ±1°C			
Capacitance Tolerance	±10%, ±20%			
Temperature Range	−40°C to +110°C			
Climatic Category	40/110/56 IEC 60068-1			
Storage Conditions	Storage time: ≤ 24 months from the date marked on the label package			
	Average relative humidity per year ≤ 70%			
	RH ≤ 85% for 30 days randomly distributed throughout the year			
	Dew is absent			
	Temperature: −40 to 80°C (see "Maximum Humidity in Storage Conditions" graph below)			
Approvals	ENEC, UL, cUL, CQC			
Dissipation Factor (tanδ) at 1 kHz at 25 °C ±5°C	C ≤ 0.1 µF		C > 0.1 µF	
	0.3%		0.2%	
Test Voltage Between Terminals	The 100% screening factory test is carried out at 1,900 VDC. The voltage level is selected to meet the requirements in applicable equipment standards. All electrical characteristics are checked after the test. This test cannot be repeated, as there is a risk of damaging the capacitor. KEMET is not liable in such cases for any failures.			
Insulation Resistance	Measured at +25°C ±5°C, according to IEC 60384–2			
	Minimum Values Between Terminals			
	Voltage Charge	Voltage Charge Time	C ≤ 0.33 µF	C > 0.33 µF
	100 VDC	1 minute	≥ 1 • 10^5 MΩ (≥ 5 • 10^5 MΩ)*	≥ 30,000 MΩ • µF (≥ 150,000 MΩ • µF)*

** Typical value*

Performance Characteristics cont.

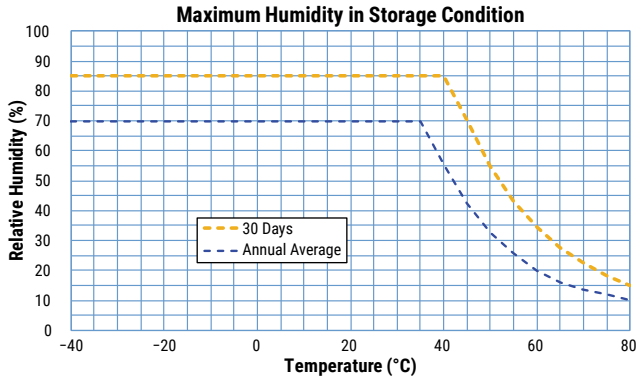

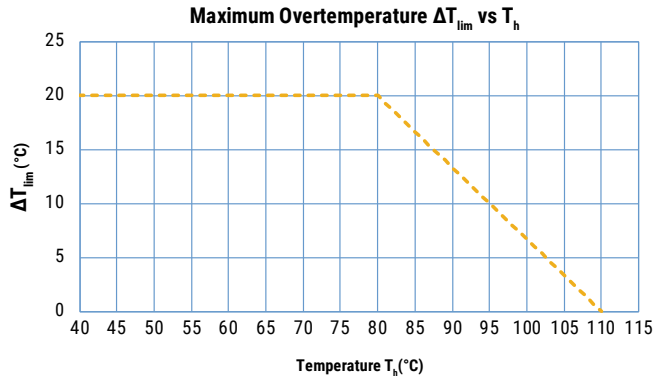

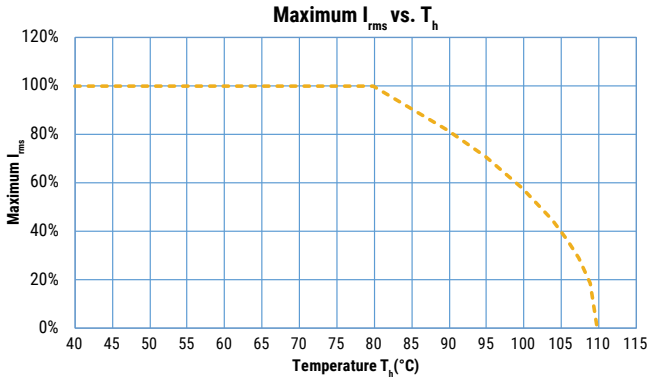

T_h is the maximum ambient temperature surrounding the capacitor or hottest contact point (e.g. tracks), whichever is higher, in the worst operation conditions in °C.

Qualification

Automotive Grade products meet or exceed the requirements outlined by the Automotive Electronics Council. Details regarding test methods and conditions are referenced in document AEC–Q200, Stress Test Qualification for Passive Components. For additional information regarding the Automotive Electronics Council and AEC–Q200, please visit the website at www.aecouncil.com.

Impedance Graph

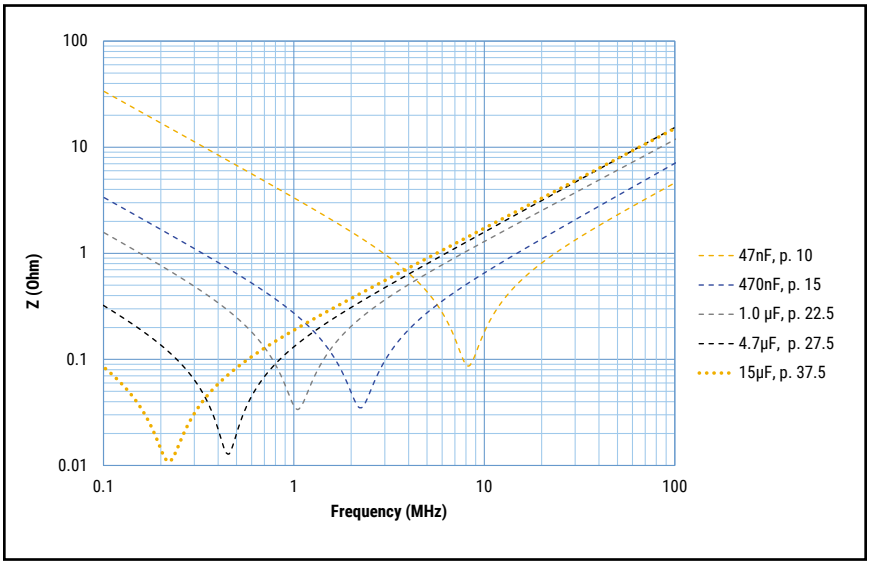

Maximum Voltage (V_{rms}) Versus Frequency (Sinusoidal Waveform/Th ≤ 80°C)

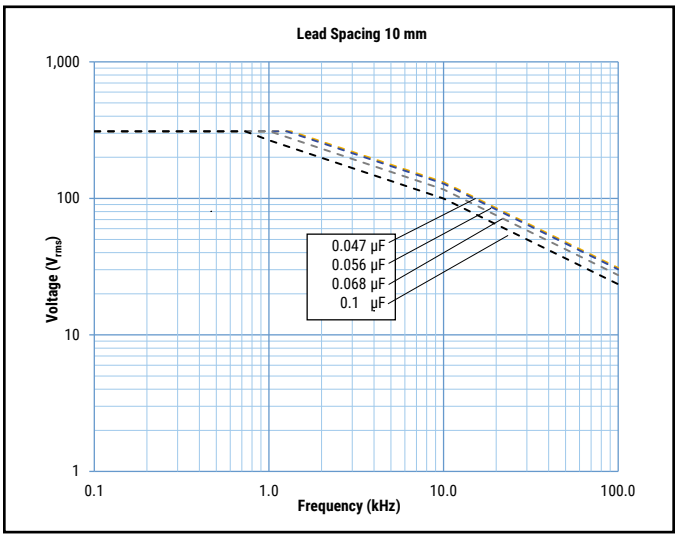

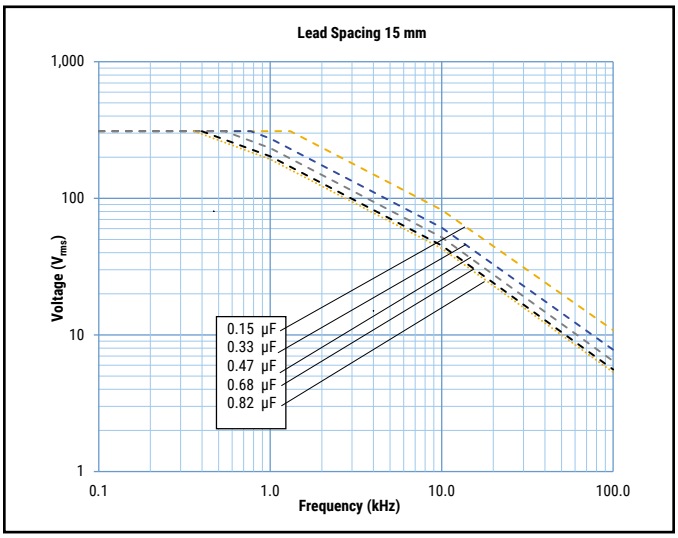

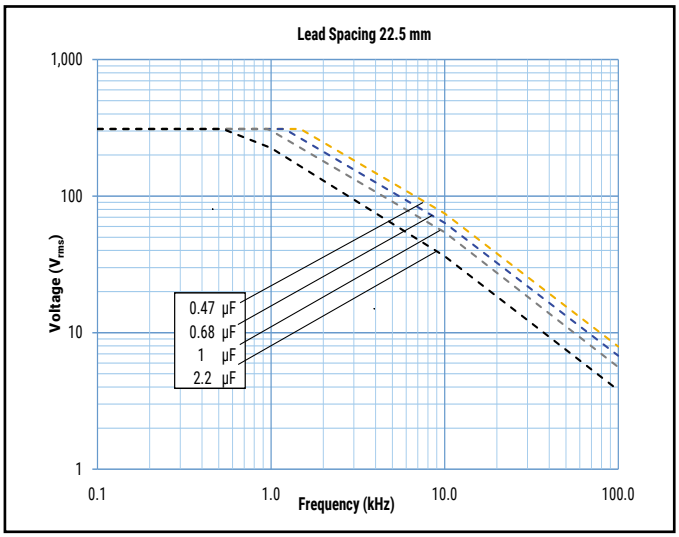

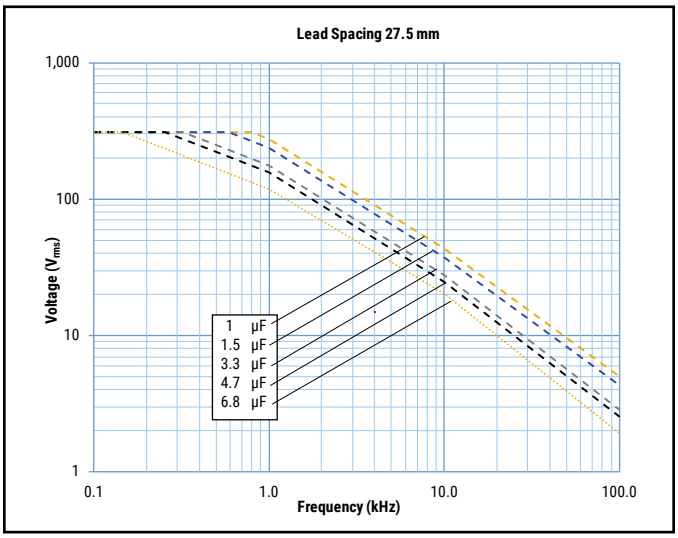

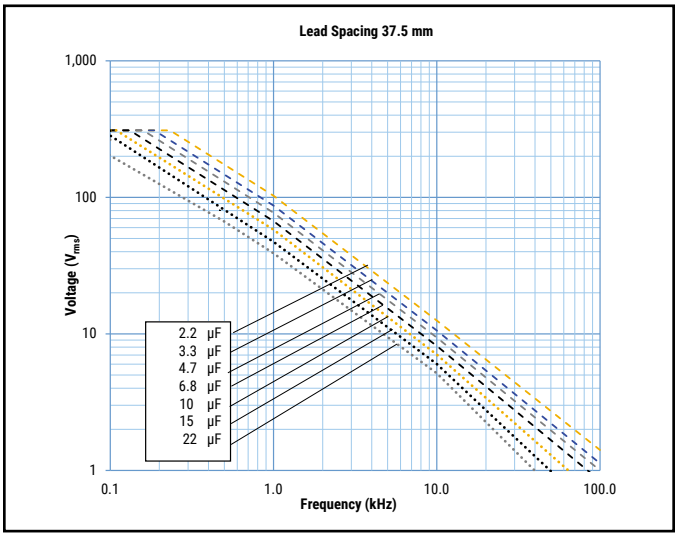

Maximum Current (I_{rms}) Versus Frequency (Sinusoidal Waveform/Th ≤ 80°C)

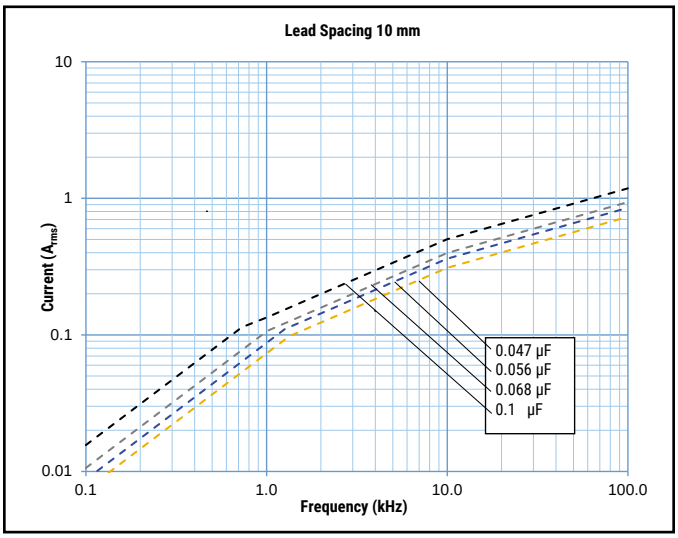

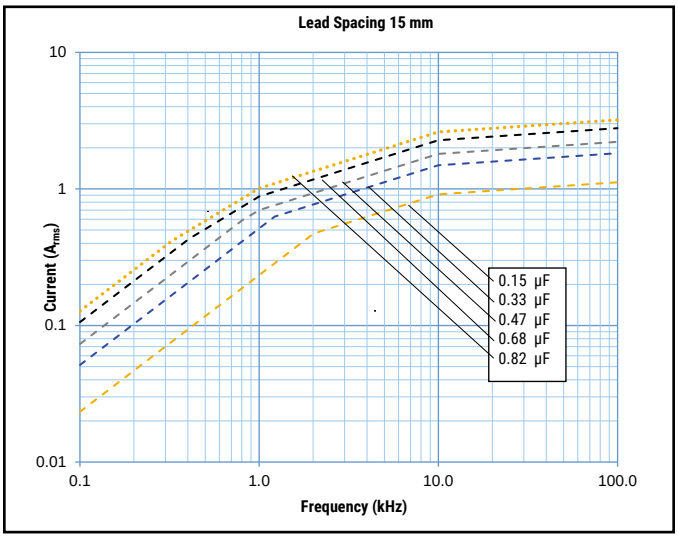

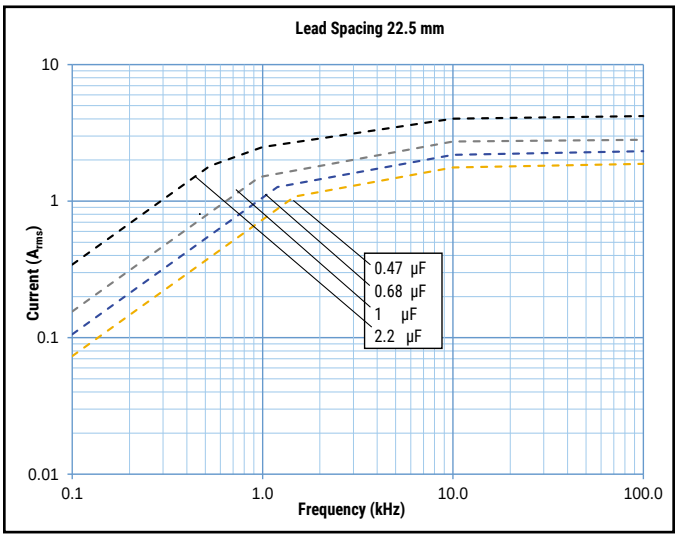

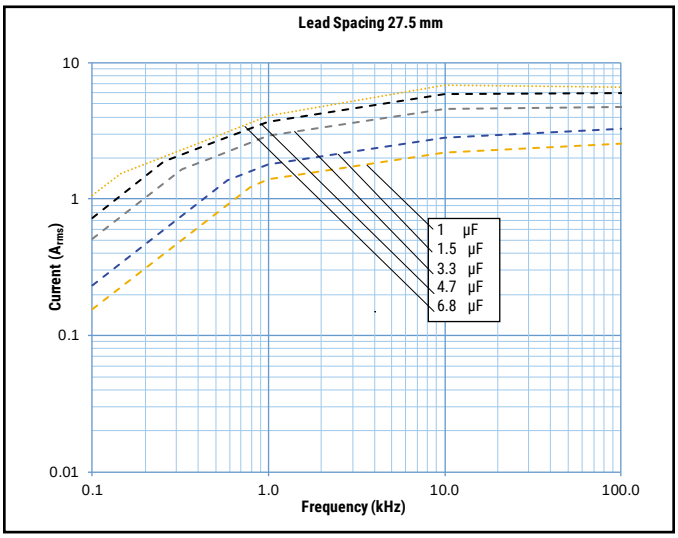

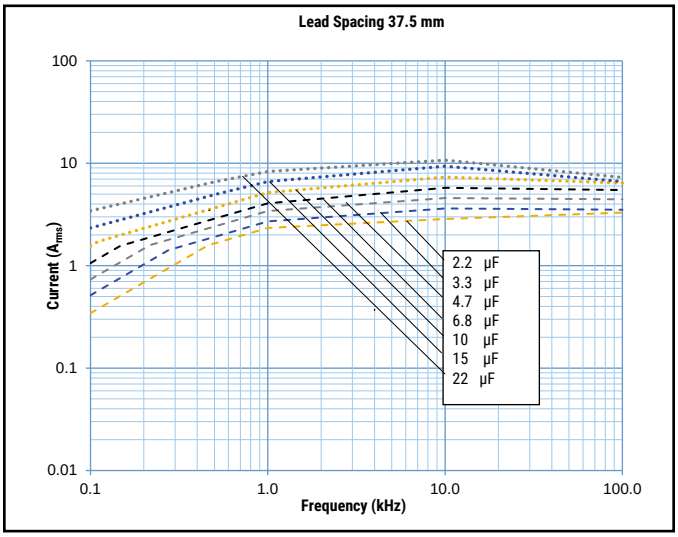

Environmental Test Data

Test	IEC Publication	Procedure
Endurance	IEC 60384-14	1.25 x V_R VAC 50 Hz, once every hour increase to 1,000 VAC for 0.1 second, 1,000 hours at upper rated temperature
Vibration	MIL-STD-202 Method 204	5 G for 20 minutes, 12 cycles each of 3 orientations. Use 8" X 5" PCB, 0.031" thick. 7 secure points on one 8" side and 2 secure points at corners of opposite sides. Parts mounted within 2" from any secure point. Test from 10 – 2,000 Hz.
Mechanical Shock	MIL-STD-202 Method 213	Figure 1 of Method 213. Condition C
Temperature Cycling	JESD22-Method JA-104	1,000 cycles (−55°C to 110°C) Note: Measurement at 24 ±4 hours after test conclusion. 30 minute maximum dwell time at each temperature extreme. 1 minute maximum transition time.
Active Flammability	IEC 60384-14	V_R + 20 surge pulses at 2.5 kV (pulse every 5 seconds)
Passive Flammability	IEC 60384-14	IEC 60384–1, IEC 60695–11–5 Needle flame test
Biased Humidity		85°C/85% RH and 240 VAC, 1,000 hours Capacitance change (ΔC/C): ≤ 10% Dissipation factor change (Δtan δ): ≤ 15 * 10^{-3} (at 1 kHz) Insulation resistance Rins or time constant τ = CR Rins: ≥ 50% of initial limit
	According to Grade IIB	85°C/85% RH and 310 VAC, 500 hours Capacitance change (ΔC/C): ≤ 10% Dissipation factor change (Δtan δ): ≤ 24 * 10^{-3} (at 10 kHz) for C ≤ 1 μF Dissipation factor change (Δtan δ): ≤ 15 * 10^{-3} (at 1 kHz) for C > 1 μF Insulation resistance Rins or time constant τ = CR Rins: ≥ 50% of initial limit

Approvals

Certification Body	Mark	Specification	File Number
IMQ S-p.A.		EN/IEC 60384–14	CA08.00231
UL		UL 60384–14 and CAN/CSA E60384–14 (310 VAC)	E97797
CQC		IEC 60384–14	CQC20001263098 CQC20001263100 CQC20001263101 CQC20001263102 CQC20001263103

Environmental Compliance

All KEMET EMI capacitors are RoHS Compliant.

Table 1 – Ratings & Part Number Reference

Capacitance Value (µF)	Dimensions in mm			Lead Spacing (S)	dV/dt (V/µs)	KEMET Part Number	Legacy Part Number
	T	H	L				
0.047	4.0	9.0	13.0	10.0	500	523F2470(1)P0(2)	R523F2470(1)P0(2)
0.056	5.0	11.0	13.0	10.0	500	523F2560(1)P0(2)	R523F2560(1)P0(2)
0.068	5.0	11.0	13.0	10.0	500	523F2680(1)P0(2)	R523F2680(1)P0(2)
0.10	6.0	12.0	13.0	10.0	500	523F3100(1)P0(2)	R523F3100(1)P0(2)
0.10	5.0	11.0	18.0	15.0	400	523I3100(1)P0(2)	R523I3100(1)P0(2)
0.15	5.0	11.0	18.0	15.0	400	523I3150(1)P0(2)	R523I3150(1)P0(2)
0.22	6.0	12.0	18.0	15.0	400	523I3220(1)P0(2)	R523I3220(1)P0(2)
0.33	7.5	13.5	18.0	15.0	400	523I3330(1)P0(2)	R523I3330(1)P0(2)
0.33	9.0	12.5	18.0	15.0	400	523I3330(1)P1(2)	R523I3330(1)P1(2)
0.47	8.5	14.5	18.0	15.0	400	523I3470(1)P0(2)	R523I3470(1)P0(2)
0.47	9.0	12.5	18.0	15.0	400	523I3470(1)P1(3)	R523I3470(1)P1(3)
0.47	7.5	18.5	18.0	15.0	400	523I3470(1)P3(2)	R523I3470(1)P3(2)
0.56	10.0	16.0	18.0	15.0	400	523I3560(1)P0(2)	R523I3560(1)P0(2)
0.68	10.0	16.0	18.0	15.0	400	523I3680(1)P1(3)	R523I3680(1)P1(3)
0.68	11.0	19.0	18.0	15.0	400	523I3680(1)P0(2)	R523I3680(1)P0(2)
0.82	11.0	19.0	18.0	15.0	400	523I3820(1)P0(3)	R523I3820(1)P0(3)
1.0	12.0	20.0	18.0	15.0	400	523I4100(1)P0(3)	R523I4100(1)P0(3)
0.47	7.0	16.0	26.5	22.5	200	523N3470(1)P0(2)	R523N3470(1)P0(2)
0.56	7.0	16.0	26.5	22.5	200	523N3560(1)P0(2)	R523N3560(1)P0(2)
0.68	7.0	16.0	26.5	22.5	200	523N3680(1)P0(2)	R523N3680(1)P0(2)
0.82	8.5	17.0	26.5	22.5	200	523N3820(1)P0(2)	R523N3820(1)P0(2)
1.0	8.5	17.0	26.5	22.5	200	523N4100(1)P1(3)	R523N4100(1)P1(3)
1.0	10.0	18.5	26.5	22.5	200	523N4100(1)P0(2)	R523N4100(1)P0(2)
1.5	10.0	18.5	26.5	22.5	200	523N4150(1)P1(3)	R523N4150(1)P1(3)
1.5	11.0	20.0	26.5	22.5	200	523N4150(1)P0(2)	R523N4150(1)P0(2)
2.2	13.0	22.0	26.5	22.5	200	523N4220(1)P0(3)	R523N4220(1)P0(3)
1.0	9.0	17.0	32.0	27.5	150	523R4100(1)P0(2)	R523R4100(1)P0(2)
1.5	11.0	20.0	32.0	27.5	150	523R4150(1)P0(2)	R523R4150(1)P0(2)
2.2	13.0	22.0	32.0	27.5	150	523R4220(1)P0(2)	R523R4220(1)P0(2)
3.3	14.0	28.0	32.0	27.5	150	523R4330(1)P0(2)	R523R4330(1)P0(2)
4.7	14.0	28.0	32.0	27.5	150	523R4470(1)P1(3)	R523R4470(1)P1(3)
4.7	16.0	30.0	32.0	27.5	150	523R4470(1)P2(2)	R523R4470(1)P2(2)
4.7	18.0	33.0	32.0	27.5	150	523R4470(1)P0(2)	R523R4470(1)P0(2)
6.8	22.0	37.0	32.0	27.5	150	523R4680(1)P0(2)	R523R4680(1)P0(2)
2.2	11.0	22.0	41.5	37.5	100	523W4220(1)P0(2)	R523W4220(1)P0(2)
3.3	13.0	24.0	41.5	37.5	100	523W4330(1)P0(2)	R523W4330(1)P0(2)
4.7	16.0	28.5	41.5	37.5	100	523W4470(1)P0(2)	R523W4470(1)P0(2)
6.8	19.0	32.0	41.5	37.5	100	523W4680(1)P0(2)	R523W4680(1)P0(2)
10.0	20.0	40.0	41.5	37.5	100	523W5100(1)P0(2)	R523W5100(1)P0(2)
15.0	24.0	44.0	41.5	37.5	100	523W5150(1)P0(2)	R523W5150(1)P0(2)
22.0	30.0	45.0	41.5	37.5	100	523W5220(1)P0(2)	R523W5220(1)P0(2)
Capacitance Value (µF)	**B (mm)**	**H (mm)**	**L (mm)**	**Lead Spacing (p)**	**dV/dt (V/µs)**	**KEMET Part Number**	**Legacy Part Number**

(1) Insert lead and packaging code. See Ordering Options Table for available options.
(2) M = ±20%, K = ±10%
(3) M = ±20% (only available tolerance).

Soldering Process

The implementation of the RoHS directive has resulted in the selection of SnAuCu (SAC) alloys or SnCu alloys as primary solder material. This has increased the liquidus temperature from 183°C for SnPb eutectic alloys to 217 – 221°C for the new alloys. As a result, the heat stress to the components, even in wave soldering, has increased considerably due to higher pre-heat and wave temperatures. Polypropylene capacitors are especially sensitive to heat (the melting point of polypropylene is 160 – 170°C). Wave soldering can be destructive, especially for mechanically small polypropylene capacitors (with lead spacing of 5 – 15 mm). Great care must be taken during soldering. The recommended solder profiles from KEMET should be used. Consult KEMET with any questions. In general, the wave soldering curve from IEC Publication 61760-1 Edition 2 serves as a solid guideline for successful soldering. See Figure 1.

Reflow soldering is not recommended for through-hole film capacitors. Exposing capacitors to a soldering profile in excess of the above-recommended limits may result to degradation of or permanent damage to the capacitors.

Do not place the polypropylene capacitor through an adhesive curing oven to cure resin for surface mount components. Insert through-hole parts after curing surface mount parts. Consult KEMET to discuss the actual temperature profile in the oven, if through-hole components must pass through the adhesive curing process. A maximum two soldering cycles is recommended. Allow time for the capacitor surface temperature to return to normal temperature before performing the second soldering cycle.

Manual Soldering Recommendations

Following is the recommendation for manual soldering with a soldering iron.

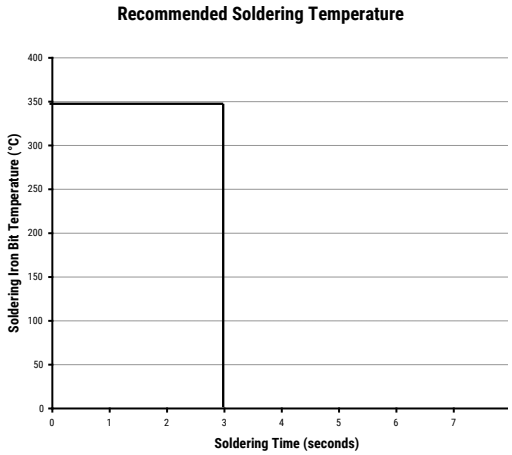

The soldering iron tip temperature should be set at 350°C (+10°C maximum), with the soldering duration not to exceed more than 3 seconds.

Wave Soldering Recommendations

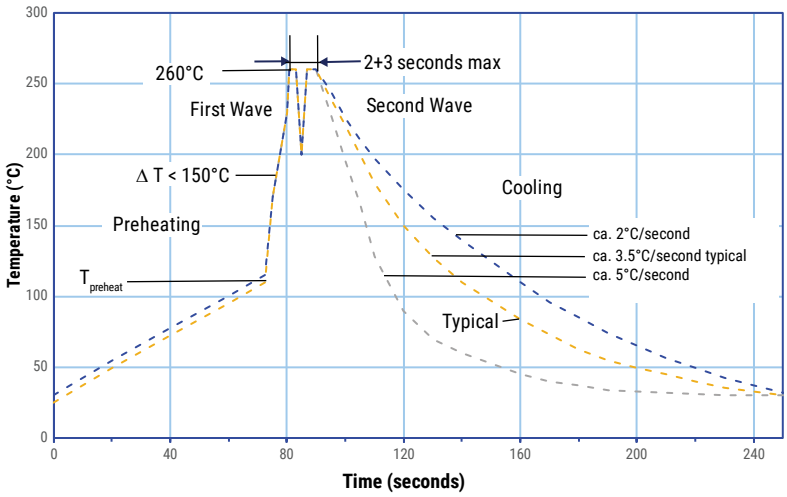

Soldering Process cont.

Wave Soldering Recommendations cont.

1. The table indicates the maximum set-up temperature of the soldering process.

Dielectric Film Material	Maximum Preheat Temperature		Maximum Peak Soldering Temperature	
	Capacitor Pitch ≤ 15 mm	Capacitor Pitch > 15 mm	Capacitor Pitch ≤ 15 mm	Capacitor Pitch > 15 mm
Polyester	130°C	130°C	270°C	270°C
Polypropylene	110°C	130°C	260°C	270°C
Paper	130°C	140°C	270°C	270°C
Polyphenylene Sulphide	150°C	160°C	270°C	270°C

2. The maximum temperature measured inside the capacitor: set the temperature so that the maximum temperature inside the element is below the limit.

Dielectric Film Material	Maximum Temperature Measured Inside the Element
Polyester	160°C
Polypropylene	110°C
Paper	160°C
Polyphenylene Sulphide	160°C

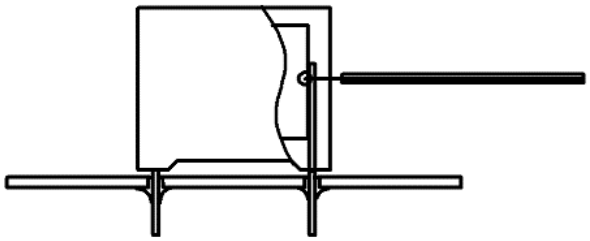

Temperature monitored inside the capacitor.

Selective Soldering Recommendations

Selective dip soldering is a variation of reflow soldering. In this method, the printed circuit board with through-hole components to be soldered is preheated and transported over the solder bath as it is in normal flow soldering, without touching the solder. When the board is over the bath, it is stopped. Pre-designed solder pots are lifted from the bath with molten solder, only at the places of the selected components, and pressed against the lower surface of the board to solder the components.

The temperature profile for selective soldering is similar to the double wave flow soldering outlined in this document. **However, instead of two baths, there is only one with a time from 3 – 10 seconds.** In selective soldering, the risk of overheating is greater than in double wave flow soldering, and great care must be taken so that the parts do not overheat.

Mounting

Resistance to Vibration and Mechanical Shock

AEC-Q200 Rev. E, Mechanical Stress Tests:

Mechanical Shock	**MIL-SDT-202 Method 213**	Figure 1 of Method 213 • THT: Condition C • SMD: Condition C • Tested per the Supplier's recommended mounting method
Vibration	**MIL-SDT-202 Method 204**	• 5 g for 20 minutes, 12 cycles each of 3 orientations • Tested per the Supplier's recommended mounting method • Verification of transfer load: during setup, verify that with the selected PCB design (size, thickness and secure points), or an alternative mount, that the transferred load onto the component corresponds to the requested load. This verification can be achieved using a laser vibrometer or other adequate measuring device • Test from 10 Hz – 2,000 Hz.

The capacitors are designed for PCB mounting. The stand-off pipes must be in good contact with the printed circuit board. The capacitor body has to be properly fixed (e.g. clamped or glued).

Construction

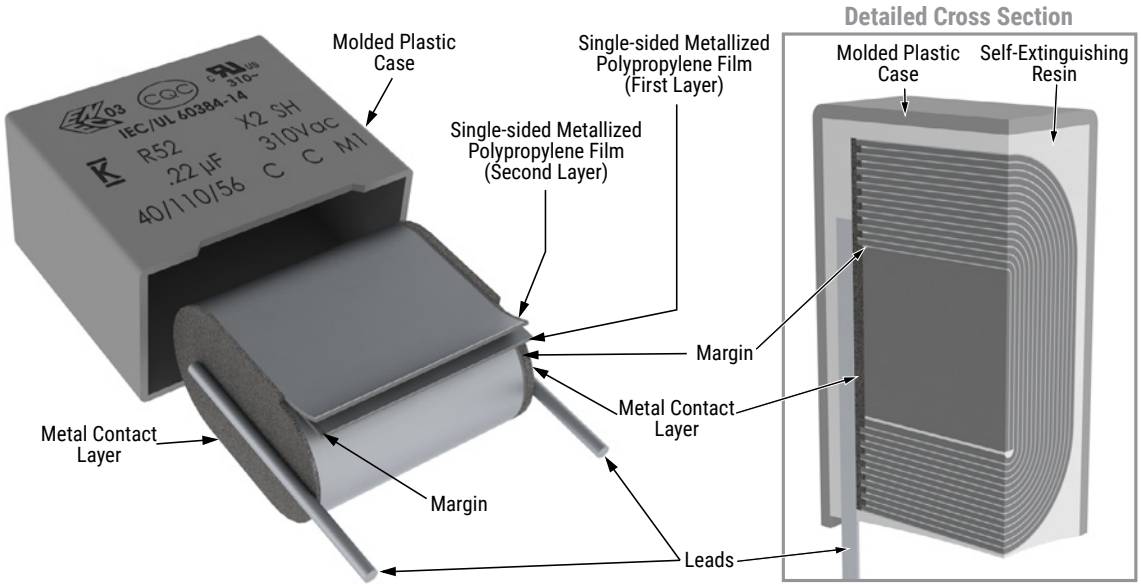

Winding Scheme

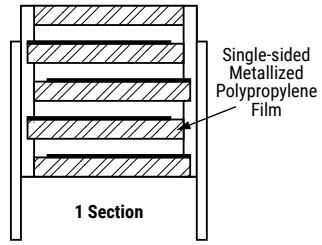

Marking

Lead Spacing 15 mm, 22.5 mm, and 27.5 mm

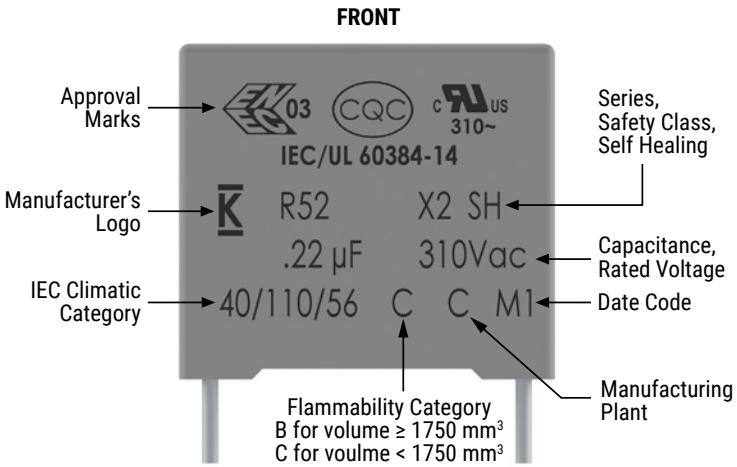

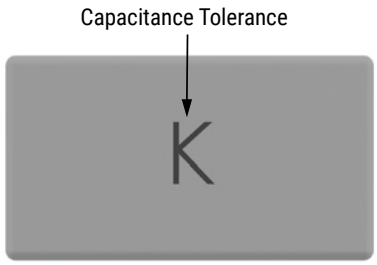

NOTE: Hot imprinting with or without color or ink jet or laser marking

Lead Spacing 22.5, 27.5 mm (alternatives*) and 37.5 mm

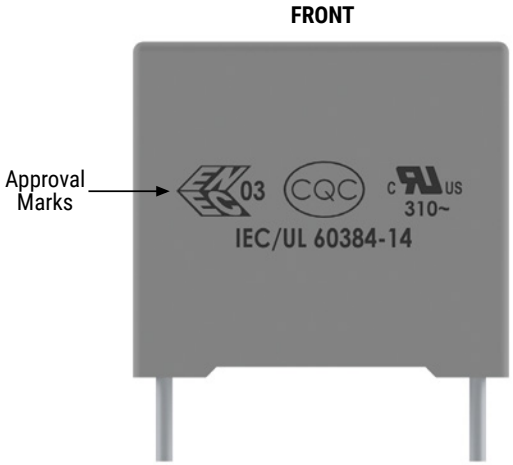

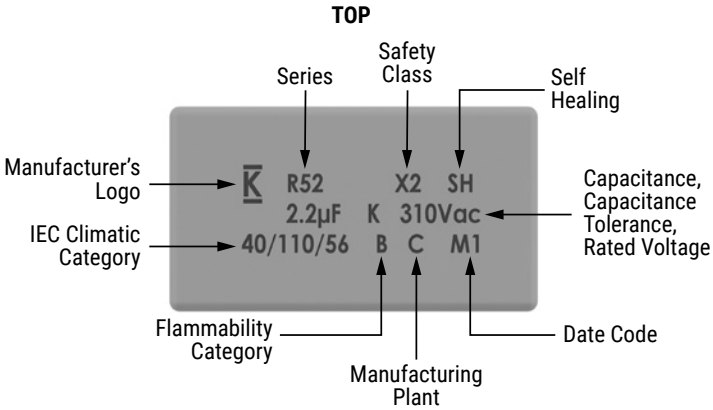

**Differences are caused by technology (clichee, laser, or ink) and production line.*

Slight change in the layout can be possible but this does not affect the content of the information of the current marking.
This change will be achieved without impact to product form, fit or function, as the products are equivalent with respect to physical, mechanical, quality and reliability characteristics.

Marking cont.

Lead Spacing 10 mm

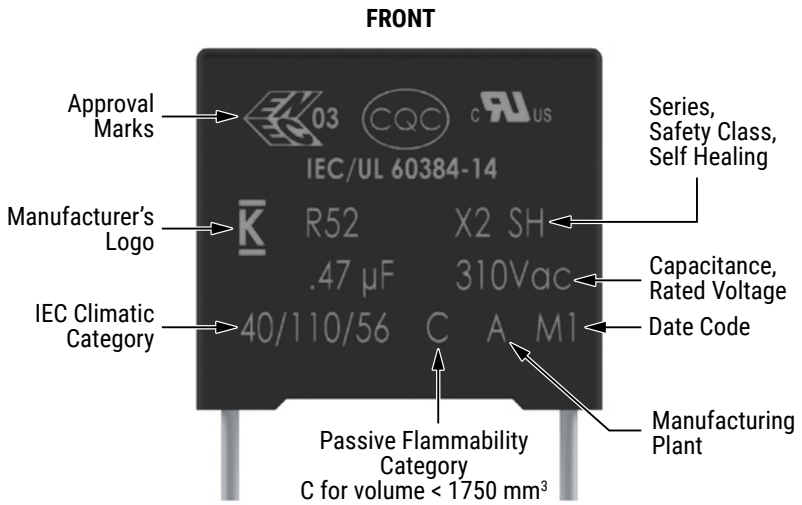

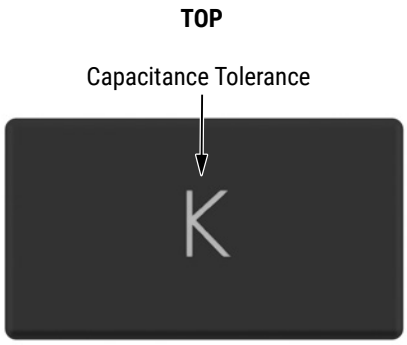

Slight change in the layout can be possible but this does not affect the content of the information of the current marking.
This change will be achieved without impact to product form, fit or function, as the products are equivalent with respect to physical, mechanical, quality and reliability characteristics.

Manufacturing Date Code (IEC 60062)									
Year	Code	Year	Code	Year	Code	Month	Code	Month	Code
2020	M	2027	V	2034	E	January	1	July	7
2021	N	2028	W	2035	F	February	2	August	8
2022	P	2029	X	2036	H	March	3	September	9
2023	R	2030	A	2037	J	April	4	October	O
2024	S	2031	B	2038	K	May	5	November	N
2025	T	2032	C	2039	L	June	6	December	D
2026	U	2033	D	2040	M				

Packaging Quantities

Lead Spacing (mm)	Thickness (mm)	Height (mm)	Length (mm)	Bulk Short Leads	Bulk Long Leads		Standard Reel ø 355 mm	Large Reel ø 500 mm	Ammo Taped	Pizza
Lead and Packaging Code:				00 - JA - JB JE - JH	JM	40 – 50	GY	CK	DQ	BB
10	4	9	13	2,000	2,200	1,800	750	1,500	1000	-
	5	11	13	1,300	2,000	1,500	600	1,250	800	-
	6	12	13	1,000	1,800	1,200	500	1000	680	-
15	5	11	18	2,000	1,250	1,000	600	1,250	800	1,122
	6	12	18	1,750	1,000	900	500	1,000	680	935
	7.5	13.5	18	1,000	800	700	350	800	500	748
	7.5	18.5	18	900	650	500	-	800	500	748
	8.5	14.5	18	1,000	650	500	300	700	440	663
	9	12.5	18	1,000	700	520	270	650	410	612
	10	16	18	750	550	500	270	600	380	561
	11	19	18	450	400	350	-	500	340	510
	12	20	18	400	350	350	220	450	300	459
22.5	7	16	26.5	700	450	500	-	550	380	564
	8.5	17	26.5	468	350	300	-	450	280	468
	10	18.5	26.5	396	350	300	-	350	235	396
	11	20	26.5	360	200	250	-	350	217	360
	13	22	26.5	300	150	200	-	300	-	300
27.5	9	17	32	816	408	408	-	450	-	370
	11	20	32	560	336	336	-	350	-	300
	13	22	32	480	288	288	-	300	-	250
	14	28	32	352	176	176	-	-	-	230
	16	30	32	288	144	144	-	-	-	200
	18	33	32	256	128	128	-	-	-	170
	22	37	32	168	112	112	-	-	-	150
37.5	11	22	41.5	420	252	252	-	-	-	210
	13	24	41.5	360	216	216	-	-	-	175
	16	28.5	41.5	216	108	108	-	-	-	140
	19	32	41.5	192	96	96	-	-	-	119
	20	40	41.5	126	84	84	-	-	-	112
	24	44	41.5	108	72	72	-	-	-	91
	30	45	41.5	90	60	60	-	-	-	77

Lead Taping & Packaging (IEC 60286–2)

Figure 1
Lead Spacing 10 mm

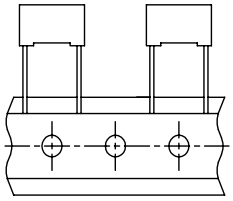

Figure 2
Lead Spacing 15 mm

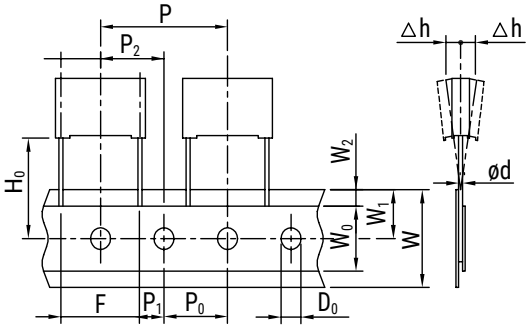

Figure 3
Lead Spacing 22.5 – 27.5 mm

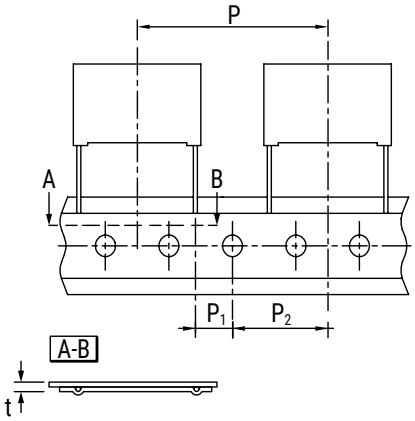

Taping Specification

Description	Symbol	Dimensions (mm)				
		Lead Space				Tol.
		10	15	22.5	27.5	
		Fig. 1	Fig. 2	Fig. 3	Fig. 3	
Lead wire diameter	d	0.6	0.6–0.8	0.8	0.8	±0.05
Taping lead space	P	25.4	25.4	38.1	38.1	±1
Feed hole lead space *	P_0	12.7	12.7	12.7	12.7	±0.2 **
Centering of the lead wire	P_1	7.7	5.2	7.8	5.3	±0.7
Centering of the body	P_2	12.7	12.7	19.05	19.05	±1.3
Lead spacing (pitch) ***	F	10	15	22.5	27.5	+0.6/−0.1
Component alignment	Δh	0	0	0	0	±2
Height of component from tape center	H_0 ****	18.5	18.5	18.5	18.5	±0.5
Carrier tape width	W	18	18	18	18	+1/−0.5
Hold down tape width	W_0	9	10	10	10	Minimum
Hole position	W_1	9	9	9	9	±0.5
Hold down tape position	W_2	3	3	3	3	Maximum
Feed hole diameter	D_0	4	4	4	4	±0.2
Total tape thickness	t	0.7	0.7	0.7	0.7	±0.2

** 15 mm also available*
*** Maximum of 1 mm on 20 lead spaces*
**** Pitches 15 mm and 10 mm taped to 7.5 mm (crimped leads) available upon request*
***** H_0 = 16.5 mm is available upon request*

Lead Taping & Packaging (IEC 60286–2) cont.

Ammo Specifications

Dimensions (mm)		
H	W	T
360	340	59

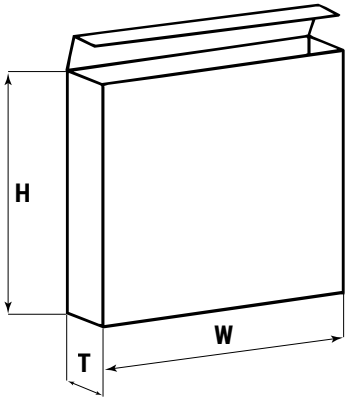

Reel Specifications

Reel Size	Dimensions (mm)		
	D	H	W
Standard	355	30	55 Maximum
Large	500	25	

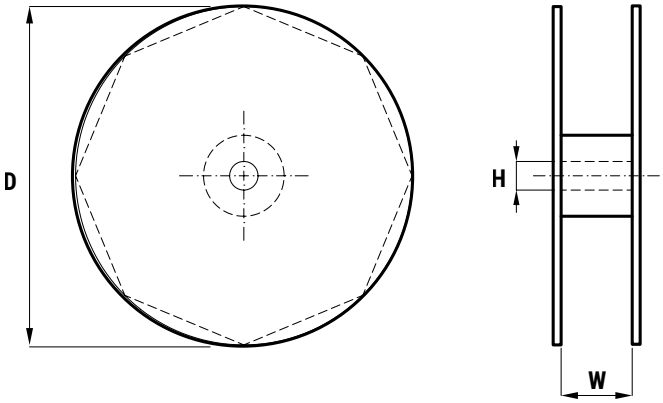

KEMET Electronics Corporation Sales Offices

For a complete list of our global sales offices, please visit www.kemet.com/sales.

Disclaimer

YAGEO Corporation and its affiliates do not recommend the use of commercial or automotive grade products for high reliability applications or manned space flight.

All product specifications, statements, information and data (collectively, the "Information") in this datasheet are subject to change. The customer is responsible for checking and verifying the extent to which the Information contained in this publication is applicable to an order at the time the order is placed. All Information given herein is believed to be accurate and reliable, but it is presented without guarantee, warranty, or responsibility of any kind, expressed or implied.

Statements of suitability for certain applications are based on KEMET Electronics Corporation's ("KEMET") knowledge of typical operating conditions for such applications, but are not intended to constitute – and KEMET specifically disclaims – any warranty concerning suitability for a specific customer application or use. The Information is intended for use only by customers who have the requisite experience and capability to determine the correct products for their application. Any technical advice inferred from this Information or otherwise provided by KEMET with reference to the use of KEMET's products is given gratis, and KEMET assumes no obligation or liability for the advice given or results obtained.

Although KEMET designs and manufactures its products to the most stringent quality and safety standards, given the current state of the art, isolated component failures may still occur. Accordingly, customer applications which require a high degree of reliability or safety should employ suitable designs or other safeguards (such as installation of protective circuitry or redundancies) in order to ensure that the failure of an electrical component does not result in a risk of personal injury or property damage.

Although all product–related warnings, cautions and notes must be observed, the customer should not assume that all safety measures are indicated or that other measures may not be required.

Additional information about production site flexibility can be found <here>

KEMET is a registered trademark of KEMET Electronics Corporation.