MicroBridge

for Automotive Applications

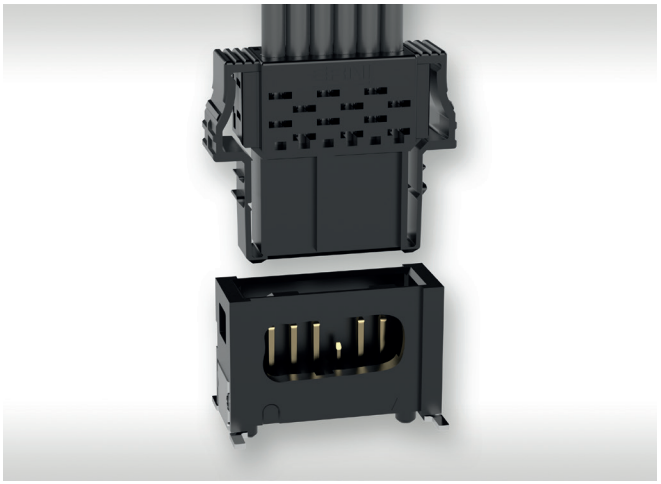

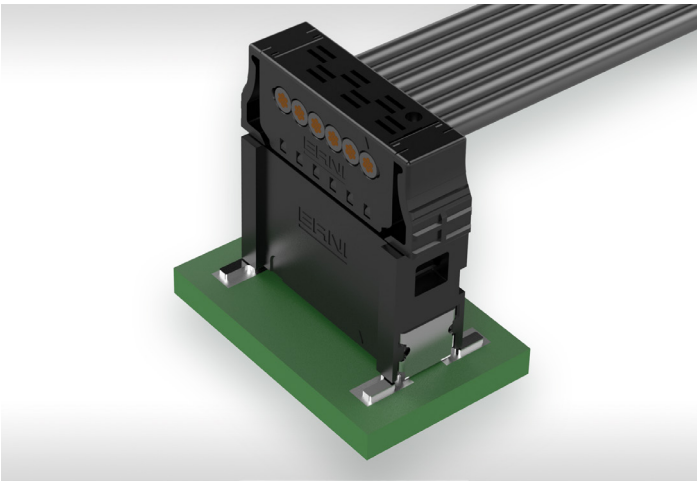

MicroBridge - FOR AUTOMOTIVE-APPLICATIONS

We have consistently fulfilled the requirements of our customers from the automotive sector through the MicroBridge connector product group. The Wire-to-Board connector was developed based on the LV 214 / TLF 0214 and USCAR-2 automotive test specifications.

The MicroBridge connector meets the high requirements of the automotive sector, especially in terms of connection reliability. The ERNI industry exclusive patended double Insulation Displacement Connector (IDC) design with strain relief feature brings an exceptional performance in the challenging slow motion bending test introduced for automotive standards. Koshiri security and the optionally available electrical Connector Position Assurance (CPA) provide more secure and proper connection. Despite the compact 1.27 mm pitch, the MicroBridge is extremely robust and resists the vibrations in vehicles thanks to double-sided interlocking. The compact design is excellent for use in compact installation spaces.

The high temperature resistance of up to 150 °C allows the connectors to be used in areas exposed to demanding temperature conditions, e.g. close to LEDs in the headlights. It is not only the high temperature that stands out on the MicroBridge connector but also the V0 UL94 Flammability rating.

The single-row IDC female connector is available with a 90° and 180° cable outlet. The male connector designed for Surface Mount Technology (SMT) is available as both a straight and angled version.

Color and mechanical coding for every pin count makes it easier to allocate connectors and prevent improper connection.

TECHNICAL DETAILS

Pitch	1.27 mm
No. of Pins	2-20 pin (single-row) possible
Plate size	0.5 mm
Pin dimensions	0.5 x 0.4 mm
Current rating per contact	max. 9.0 A at 20 °C (2-pin version)
Termination technology	Male connectors SMT Female connectors IDC
Cables	IDC discrete wire 0.35 mm^2 with FLU cables
Variants	Single-row SMT male connectors, vertical or right angle Single-row IDC female connectors with 90° or 180° cable outlet
Coding/color*	black (blue, green, red possible - colors available from 2024 onwards)
Automotive standard	developed based on the LV 214 / TLF 0214 and USCAR-2 automotive test specifications

* Due to the use of different plastics, an exact color matching of the male and female connectors cannot be guaranteed. The color shades of male and female connectors therefore usually differ within the basic color spaces.

The used basic colors red, blue, green, and black differ so clearly that the color tones can be clearly assigned visually. Mechanical coding always helps prevent the connectors from being plugged into a mating part of a different color.

CAPABILITIES

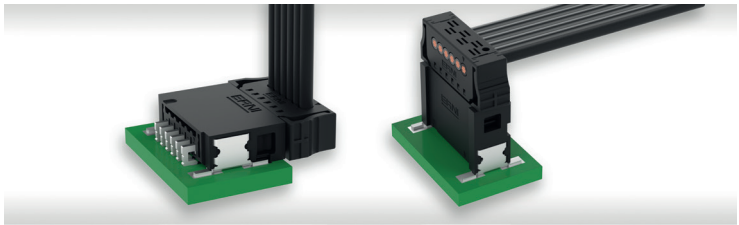

Male connector right angle or vertical - Female connector 90° cable outlet

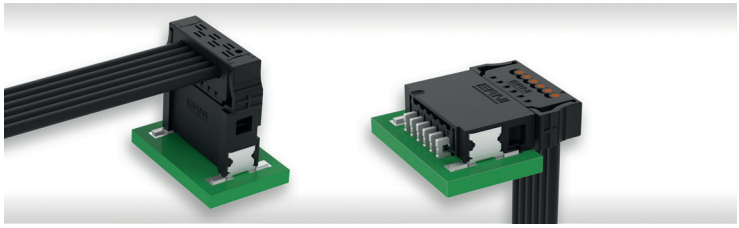

Male connector vertical or right angle - Female connector 90° cable outlet

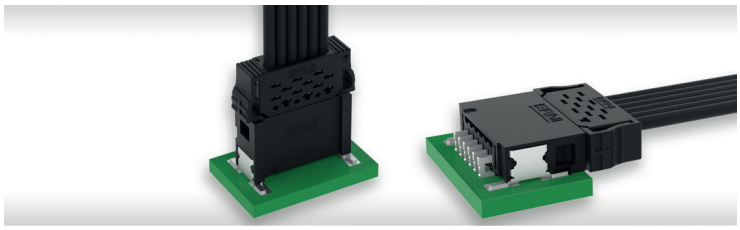

Male connector vertical or right angle - Female connector 180° cable outlet

ADVANTAGES

Double Arranged Insulation Displacement Termination

- reliable contact due to the double arranged insulation displacement contact

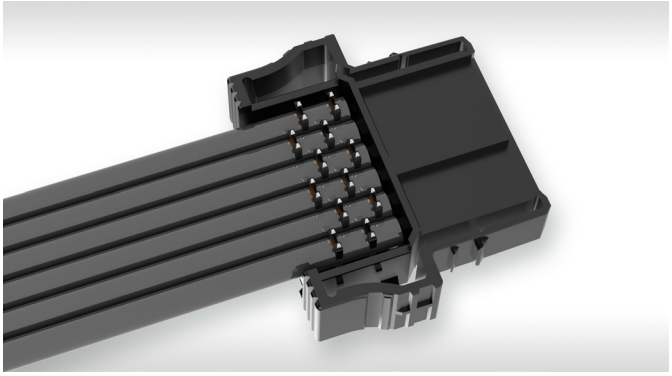

Integrated Strain Relief

- integrated strain relief helps protect the IDC connection from mechanical stress caused by cable movements
- the ERNI industry exclusive patended Double IDC design with strain relief feature brings an exceptional performance in the challenging slow motion bending test introduced for automotive standards.

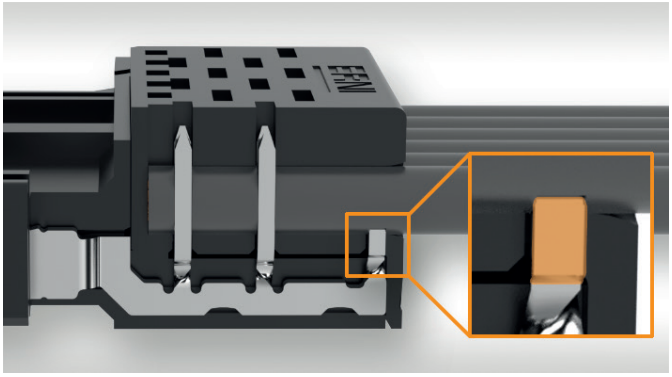

Koshiri-Security

- additional tongues at the female and grooves at the male connector allow a pre-alignment and provide an exact mating procedure
- male contacts can not be damaged while improper or skewed mating

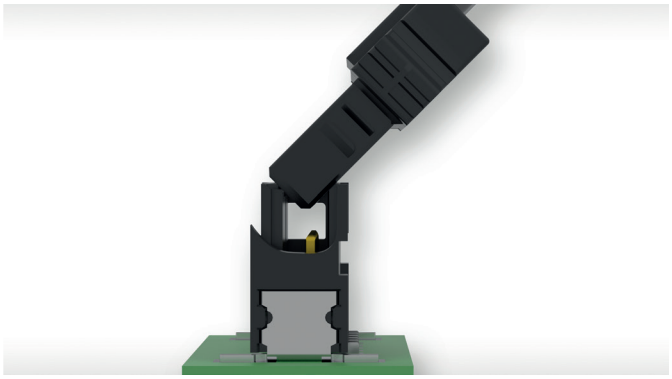

Electrical CPA (Connector Position Assurance)

- the electrical CPA enables the testing of a secure contact between female and male connector already during the mating process
- the male connector uses a shortened test pin for the electrical CPA
- the shortened test pin is used exclusively for testing secure contacting. It also has no signal or current transfer function
- the electrical CPA is optional

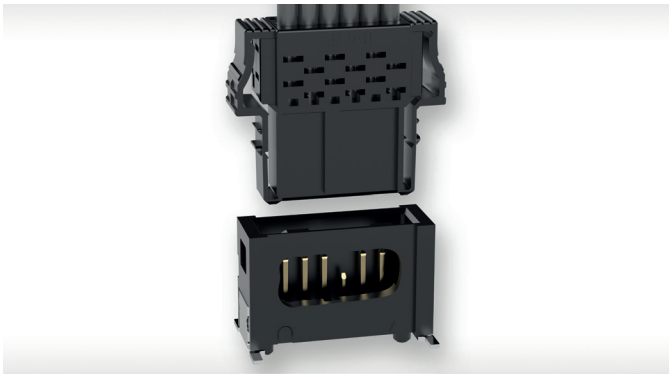

ADVANTAGES

Solder-Clip

- outstanding retention forces on the circuit board
- solder clips absorb mechanical stress and are able to withstand high shock and vibration loads

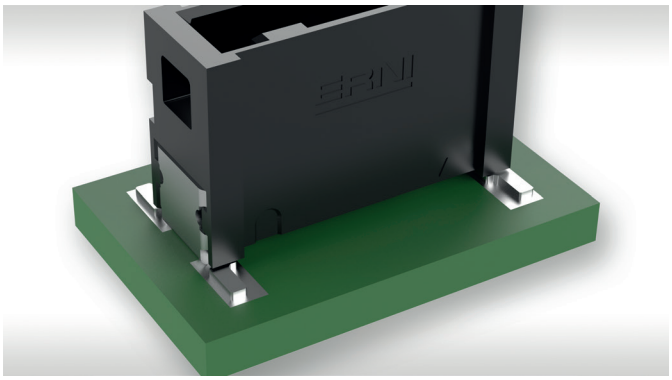

Connector Locking

- double-sided interlocking
- acoustic and haptic feedback of the interlocking
- can be manually released without tools

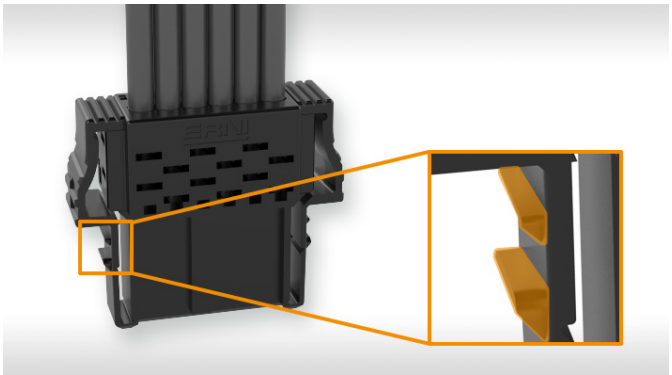

ELECTRICAL AND MECHANICAL CHARACTERISTICS

Technical Data

Description	Standard	Male SMT right angle	Male SMT vertical	Female IDC 180°	Female IDC 90°
Operating temperature	LV 214 / TLF 0214	-40 / 150 °C			
Storage conditions * (see page 9)	IEC 60721-3-1	1K5	-	1K5	1K5
	JDEC-J-STD-020	-	30°C/60%RH *	-	-
Current rating per contact (2-pin)	IEC 60512 test 5b	9.0 A @ 20 °C 6.0 A @ 90 °C 5.1 A @ 105 °C 3.7 A @ 125 °C			
Operating voltage		The permissible operating voltages depend on the customer application and on the applicable or specified safety requirements. Insulation coordination according to IEC 60664-1 has to be regarded for the complete electrical device. Therefore, the maximum creepage and clearance distances of the mated connectors are specified for consideration as a part of the whole current path. In practice, reductions in creepage or clearance distances may occur due to the conductive pattern of the printed board or the wiring used, and have to be taken into account separately. As a result the creepage and clearance distances for the application may be reduced compared to those of the connector.			
Contact resistance	IEC 60512 test 2a	5 mΩ			
Change of the contact resistance		4 mΩ			
Insulation resistant	IEC 60512 test 3a	> 100 MΩ			
Vibration	VW75174	10 – 1000 Hz incl. temperature overlay Severity level 2			
Shock, Half-wave sinusoidal	VW75174	30 g, 6 ms Severity level 2			
Retention force of the housing locking	DIN EN 60512-15-6	> 50 N			
Polarization	IEC 60512-13-5	50 N			
Processing Conditions					
Coplanarity		< 0.1 mm			
Housing Material					
Insulation body		LCP	PPA		
CTI value	IEC 60112	175	600		
UL flame rating		UL 94 V-0			
UL file plastic material		E83005	E189230		

ELECTRICAL AND MECHANICAL CHARACTERISTICS

Technical Data

Description	Standard	Male SMT right angle	Male SMT vertical	Female IDC 180°	Female IDC 90°
Contact Material					
Base material		Cu alloy			
Mating area		Gold plating			
Termination area		Sn			
Mechanical operation		100 mating cycles			
Environmental Compatibility					
Recycling		no flame-retardant additives, no toxic additives allow easy recycling			

SINGLE-ROW MALE CONNECTORS

Product Specification

- SMT Termination
- 2 – 20 pins possible
- vertical and right angle male connectors
- tape and reel packaging for automated assembly process
- vertical male connectors with or without pick and place pad possible
- for available part numbers please refer to our website

Dimensional Drawings

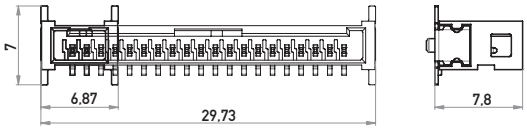

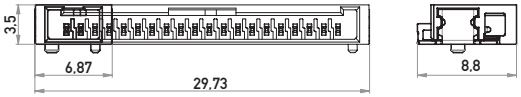

All dimensions in mm

SINGLE-ROW FEMALE CONNECTORS

Product Specification

- IDC-Versions
- 2 – 20 pins possible
- female connectors with 90° and 180° cable outlet
- cable assemblies are also available
- available part numbers on request

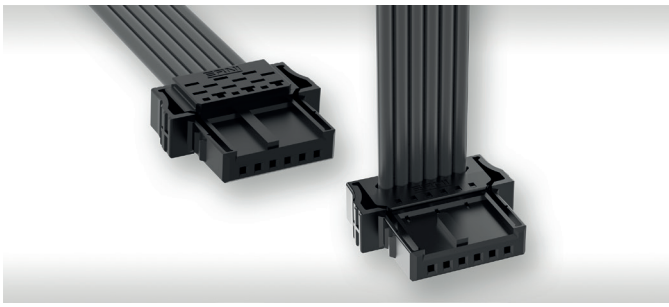

Dimensional Drawings

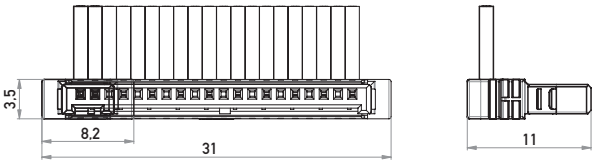

All dimensions in mm

ADDITIONAL INFORMATION ON STORAGE CONDITIONS

Moisture Sensitivity Level (MSL) relates to the packaging and handling precautions for plastic encapsulated surface mount packages and other packages made with moisture-permeable materials. The MSL is an electronic industry rating that describes how long a potentially moisture sensitive device can be exposed to ambient temperature and humidity conditions (e.g. 30°C and 60% Relative Humidity (RH)) prior to being soldered in place. Semiconductor devices absorb moisture and may be damaged during surface mount reflow when moisture trapped inside the component expands. The expansion of trapped moisture can result in internal cracks or delamination of the plastic. In the most severe case, the component will bulge and pop. This is also known as the so-called „popcorn“ effect.
The parameters for testing of the moisture sensitivity and for the storage and handling of such nonhermetic surface mount devices are defined in the JEDEC J-STD-020 standard.

In general, connectors are different from semiconductor devices, however they undergo the same soldering process and hence need to resist the same temperature requirements. Therefore, ERNI tests the connector devices according to the same MSL test parameters defined for nonhermetic surface mount devices in JEDEC J-STD-020.

To prove the applicability of shelf life conditions and provide for later solder processability, these MSL tests are accelerated in time by applying higher temperature and humidity. The subsequent exposure to solder heat in the test procedure is performed with higher temperatures than those allowed as the maximum temperature for the actual soldering process.

Usually, plastics materials show moisture absorption parameters with non-negligible dependency of the storage temperature. This circumstance makes modern connector materials like high performance Polyphtalamide (PPA) even more sensitive to moisture absorption under high test-temperature influence. The moisture “soak conditions” in the test procedure is 85°C, whereas the storage temperature is limited to 30°C. In consequence, samples may fail in these MSL tests although their storage and solder process properties excellently fit those present in state-of-the-art electronics manufacturing.

The classification of groups of environmental storage conditions from 1k1 to 1k11 is defined in the IEC 60721-3-1 standard. In JEDEC J-STD-020, the floor life conditions are limited to only two groups, either 30°C/85%RH or 30°C/60%RH with respective floor life times of the components. Unfortunately, no exact relation exists between the assumed storage conditions between JEDEC J-STD-020 and IEC 60721-3-1. Under the general assumption that no bedewing of water on the surface of electronic devices during storage takes place, ERNI connectors with PPA plastics material can be stored in those storage conditions with 30°C/60%RH given in the JEDEC J-STD-020 standard without any additional drying or “baking” needs. Hence, although the ERNI connectors with high performance PPA plastics material did not pass the harsh MSL1 test conditions, under normal storage conditions there is no need to pack them in Moisture Barrier Bags (MBB). In consequence, the ERNI connectors can be stored under 30°C/60%RH conditions without drying or MBB packing needs.

Connect With Us

We make it easy to connect with our experts and are ready to provide the support you need.
Visit **www.te.com/support** to chat with a Product Information Specialist.

te.com

2022 TE Connectivity. All Rights Reserved.

TE Connectivity, TE connectivity (logo) ERNI, MicroBridge and Every Connection Counts are trademarks owned or licensed by the TE Connectivity family of companies. All other logos, products and/or company names referred to herein might be trademarks of their respective owners.

The information given herein, including drawings, illustrations and schematics which are intended for illustration purposes only, is believed to be reliable. However, TE Connectivity makes no warranties as to its accuracy or completeness and disclaims any liability in connection with its use. TE Connectivity's obligations shall only be as set forth in TE Connectivity's Standard Terms and Conditions of Sale for this product and in no case will TE Connectivity be liable for any incidental, indirect or consequential damages arising out of the sale, resale, use or misuse of the product. Users of TE Connectivity products should make their own evaluation to determine the suitability of each such product for the specific application.

074671 03/22 Original

CATALOG

TE Connectivity

ERNI Electronics GmbH & Co. KG
a TE Connectivity Ltd. company
Seestraße 9
73099 Adelberg
Germany

Tel +49 7166 50-0
www.te.com
www.erni.com