R46KI3220DQP0M

Aliases (46KI3220DQP0M)

R46 275 VAC MINI, Film, Metallized Polypropylene, Safety, 0.22 uF, 20%, 560 VDC, 275 VAC (X2), 110°C, 15 mm

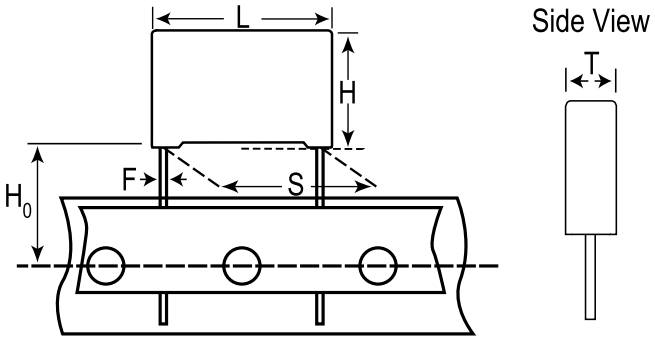

Click here for the 3D model.

General Information	
Series	R46 275 VAC MINI
Dielectric	Metallized Polypropylene
Style	Radial
Features	EMI Safety
RoHS	Yes
Termination	Tinned Wire
Lead	Wire Leads
Safety Class	X2
Qualifications	ENEC, UL, cUL, CQC
Typical Component Weight	1.926 g

Dimensions	
L	18mm +0.3/-0.5mm
H	12mm +0.1/-0.5mm
T	6mm +0.2/-0.5mm
S	15mm +/-0.4mm
H0	18.5mm +/-0.5mm
F	0.6mm +/-0.05mm

Packaging Specifications	
Packaging	Ammo, 360x340x59mm, Box
Packaging Quantity	680

Specifications	
Capacitance	0.22 uF
Tolerance	20%
Voltage DC	560 VDC
Voltage AC	275 VAC (X2)
Temperature Range	-40/+110°C
Rated Temperature	110°C
Dissipation Factor	0.1% 1kHz
Insulation Resistance	100 GOhms
Max dV/dt	400 V/us

Statements of suitability for certain applications are based on our knowledge of typical operating conditions for such applications, but are not intended to constitute - and we specifically disclaim - any warranty concerning suitability for a specific customer application or use. This Information is intended for use only by customers who have the requisite experience and capability to determine the correct products for their application. Any technical advice inferred from this Information or otherwise provided by us with reference to the use of our products is given gratis, and we assume no obligation or liability for the advice given or results obtained.

© 2006 - 2026 YAGEO