464636-E ✔ ACTIVE

TE Internal #: 464636-E

TE Internal Description: STVC 96 F ABC VVV 7-00 EE 4,0 * 137 E007

View on TE.com >

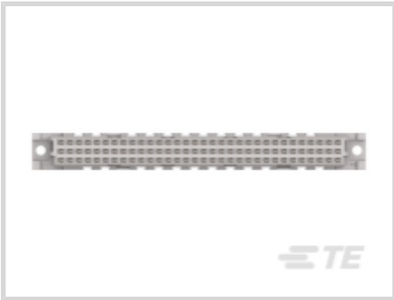
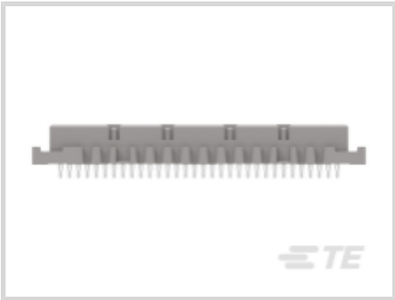
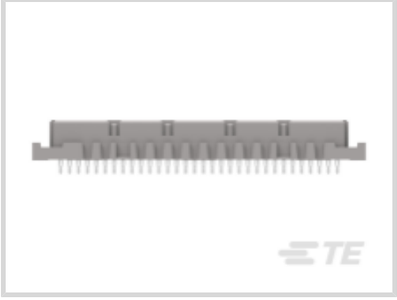

Product Compliance

For compliance documentation, visit the product page on TE.com>

EU RoHS Directive 2011/65/EU	Compliant
EU ELV Directive 2000/53/EC	Not Yet Reviewed
China RoHS 2 Directive MIIT Order No 32, 2016	有害物质含量符合标准要求 No Restricted Substance(s) Above Threshold
EU REACH Regulation (EC) No. 1907/2006	Current ECHA Candidate List: FEB 2026 (253) Candidate List Declared Against: JUNE 2022 (224) Does not contain REACH SVHC
Halogen Content	Not Yet Reviewed for halogen content
Solder Process Capability	Not reviewed for solder process capability

Product Compliance Disclaimer

This information is provided based on reasonable inquiry of our suppliers and represents our current actual knowledge based on the information they provided. This information is subject to change. The part numbers that TE has identified as EU RoHS compliant have a maximum concentration of 0.1% by weight in homogenous materials for lead, hexavalent chromium, mercury, PBB, PBDE, DBP, BBP, DEHP, DIBP, and 0.01% for cadmium, or qualify for an exemption to these limits as defined in the Annexes of Directive 2011/65/EU (RoHS2). Finished electrical and electronic equipment products will be CE marked as required by Directive 2011/65/EU. Components may not be CE marked. Additionally, the part numbers that TE has identified as EU ELV compliant have a maximum concentration of 0.1% by weight in homogenous materials for lead, hexavalent chromium, and mercury, and 0.01% for cadmium, or qualify for an exemption to these limits as defined in the Annexes of Directive 2000/53/EC (ELV). Regarding the REACH Regulation, the information TE provides on SVHC in articles for this part number is based on the latest European Chemicals Agency (ECHA) 'Guidance on requirements for substances in articles' posted at this URL: https://echa.europa.eu/guidance-documents/guidance-on-reach

Customers Also Bought

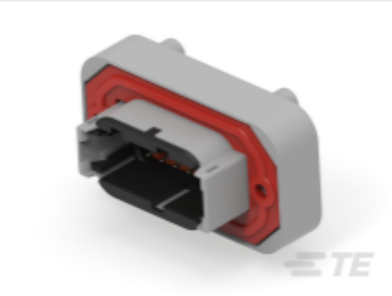

TE Part #DTM13-12PB
HDR, 12P, GRY, RA, SN/NI/CU, B

TE Part #CAT-D799-H342
DEUTSCH DRC Headers

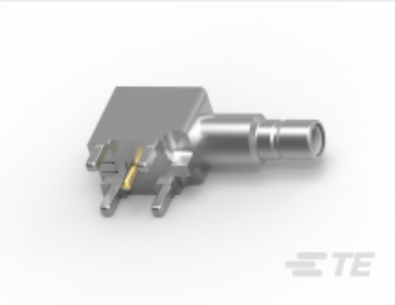

TE Part #1274412-1
SMB PCB RIGHT ANGLE JACK

TE Part #1379029-3
4POS MQS REC

TE Part #1617130-1
JMSPD-12XM = M39016/16-027M

TE Part #5-2176429-3
MPT100 68R 1%

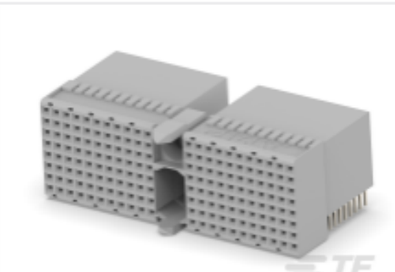

TE Part #3-5646442-0
2MM HM,ASY,T-D,REC,TWIST TULIP

TE Part #856027-E
CFGCA SRC 22S 02 PL AD AUI ETFE 030 ANN

TE Part #2236388-1
21POS,HDP,HSG,ASSY,SEALED

Documents

Product Drawings

STVC 96 F ABC VVV 7-00 EE 4,0 * 137 E007

English

CAD Files

Customer View Model

ENG_CVM_CVM_464636-E_1.3d_stp.zip

English

Customer View Model

ENG_CVM_CVM_464636-E_1.3d_igs.zip

English

Customer View Model

ENG_CVM_CVM_464636-E_1.2d_dxf.zip

English

3D PDF

3D

By downloading the CAD file I accept and agree to the Terms and Conditions of use.