Metal push-button with switching voltage up to 250 VAC and indicator elements with different illumination surfaces

Momentary Action Switches
Non-illuminated

Indicator
Area illumination
red

Push button
Ring illumination
red

See below:
Approvals and Compliances

Description

- Indicator elements in identical design as push buttons
- Mechanical switch with stroke MO (Momentary)
- With or without illumination
- With torsion protection for easier positioning
- Equipped with quick connect terminals to permit fast connection

Unique Selling Proposition

- Attractive tactile feedback
- High quality materials
- Long life span
- Color marking and variety of design options regarding size, color and illumination

Characteristics

- Housing material in stainless steel
- Actuator in stainless steel or ceramic
- Housing and actuator material of the ring-illuminated RD version in black anodized aluminum
- Switching voltage from 30 VDC to 250 VAC
- Switching current from 0.1 A to 10 A, with gold 100mA
- All laser marked, ring-illuminated and point-illuminated versions have anti-rotation protection for easy mounting

References

Other versions on request

Weblinks

pdf data sheet, html datasheet, General Product Information, CAD-Drawings, Product News, Detailed request for product

Technical Data

Electrical Data	
Switching Function	See table of Subminiature and Micro-switch
Supply Voltage LED	5 VDC - 24 VDC, see table of variants
Impulse Withstand Voltage (ESD)	8 kV contact discharge
	15 kV air discharge
Mechanical Data	
Actuating Force	4.5 N
Actuating Travel	1.0 mm
Lifetime	1.5 million actuations
Shock Protection	IK08 / IK07 (M30)
Mounting screw torque Plastic Nut	max. 3.5 Nm

Climatical Data	
Operating Temperature	-30 to 85 °C (Sub. Microswitch to -40°C)
Storage Temperature	-40 to 85 °C
Protection Class	IP66 / IP67 Front Side
Salt Spray Test (acc. to IEC 60068-2-11)	24 h / 48 h / 96 h Residence Time
Material	
Housing	Aluminium / Stainless Steel
Actuator	Aluminium / Stainless Steel / Ceramics
Seal Ring	NBR70
Plastic Nut	PA, UL94

Approvals and Compliances

Detailed information on product approvals, code requirements, usage instructions and detailed test conditions can be looked up in Details about Approvals

SCHURTER products are designed for use in industrial environments. They have approvals from independent testing bodies according to national and international standards. Products with specific characteristics and requirements such as required in the automotive sector according to IATF 16949, medical technology according to ISO 13485 or in the aerospace industry can be offered exclusively with customer-specific, individual agreements by SCHURTER.

Compliances

The product complies with following Guide Lines

Identification	Details	Initiator	Description
CE	CE declaration of conformity	SCHURTER AG	The CE marking declares that the product complies with the applicable requirements laid down in the harmonisation of Community legislation on its affixing in accordance with EU Regulation 765/2008.
UK CA	UKCA declaration of conformity	SCHURTER AG	The UKCA marking declares that the product complies with the applicable requirements laid down in the British Amendment of Regulation (EC) 765/2008.
RoHS	RoHS	SCHURTER AG	Directive RoHS 2011/65/EU, Amendment (EU) 2015/863
REACH	REACH	SCHURTER AG	On 1 June 2007, Regulation (EC) No 1907/2006 on the Registration, Evaluation, Authorization and Restriction of Chemicals 1 (abbreviated as "REACH") entered into force.

Dimension [mm]

Non illuminated push buttons

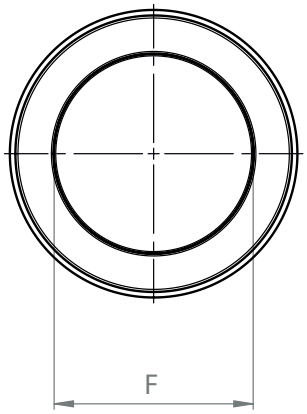

Non illuminated

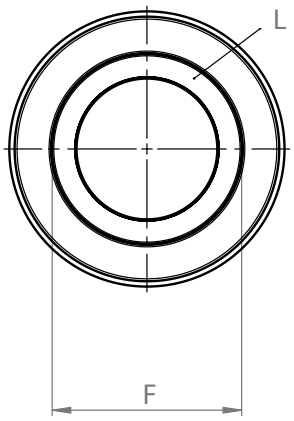

Non illuminated
with color ring (RC)

MSM II SPDT with Microswitch and Quick Connect Terminal

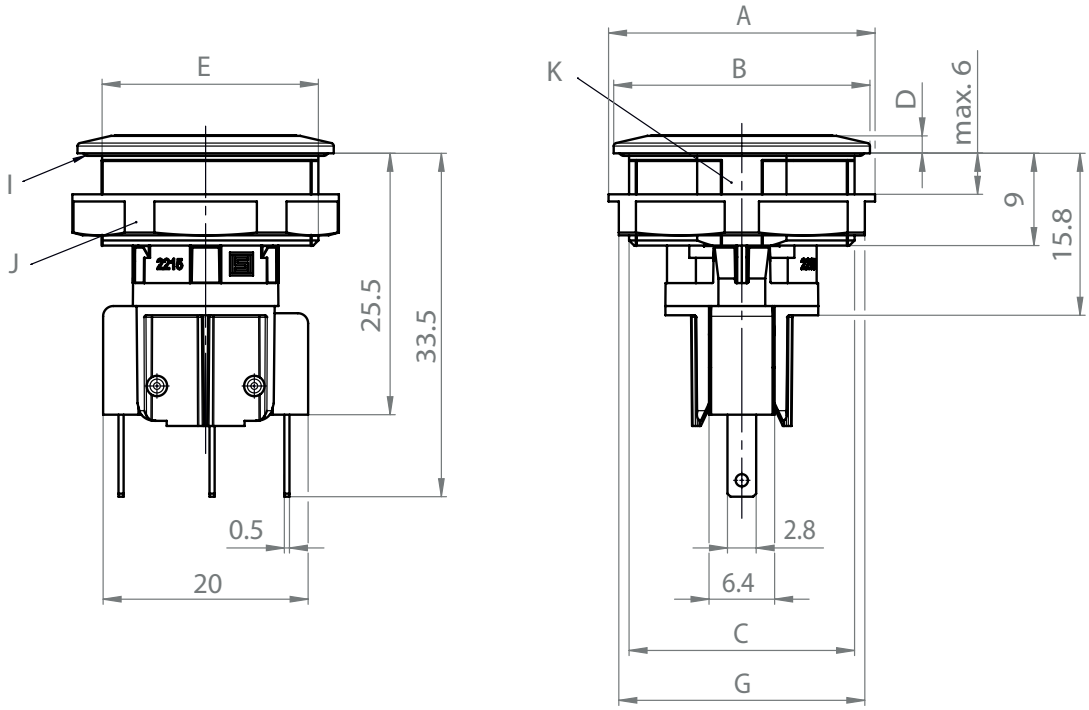

MSM II SPDT with Subminiature Microswitch and Quick Solder Terminal

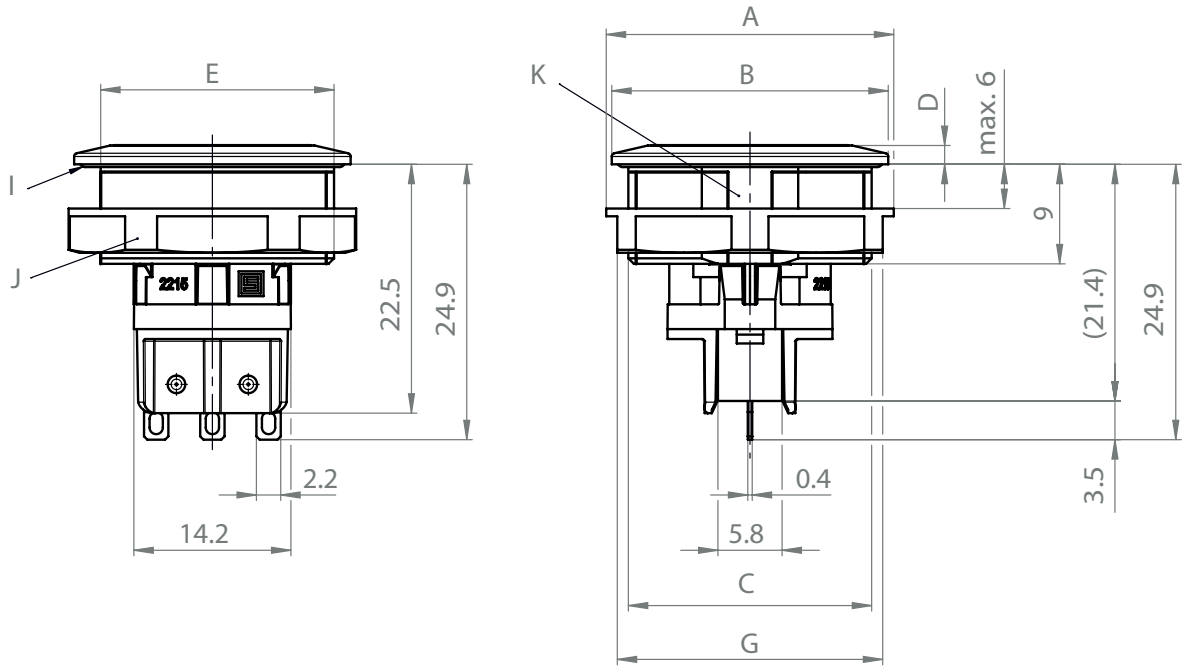

Illuminated push buttons

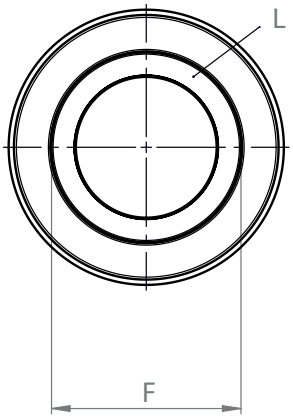

Ring illumination(RI)

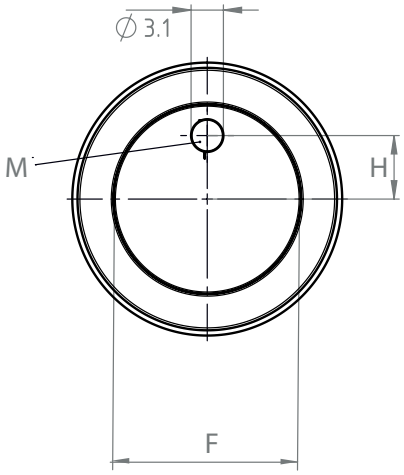

Point illumination(PI)

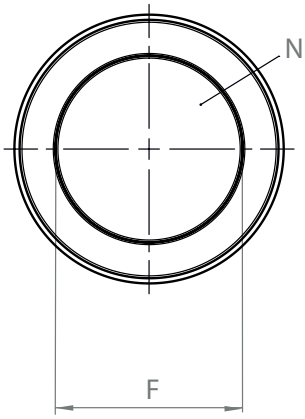

Area illumination (AI)

MSM II PI/RI SPDT with Microswitch and Quick Connect Terminal

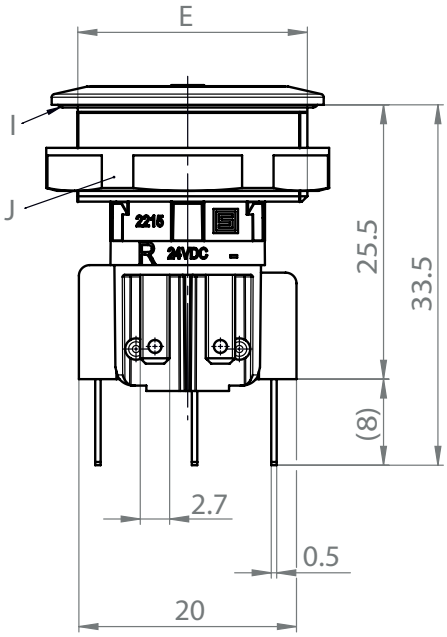

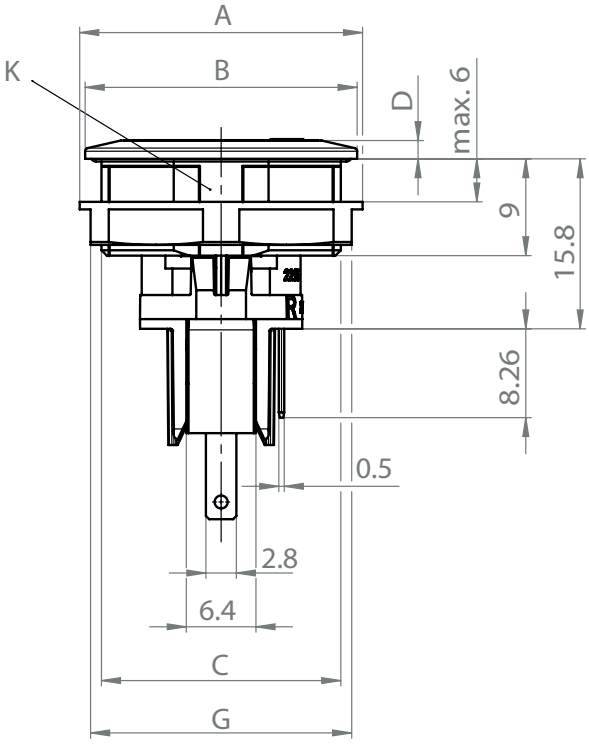

MSM II PI/RI SPDT with Subminiature Microswitch and Quick Solder Terminal

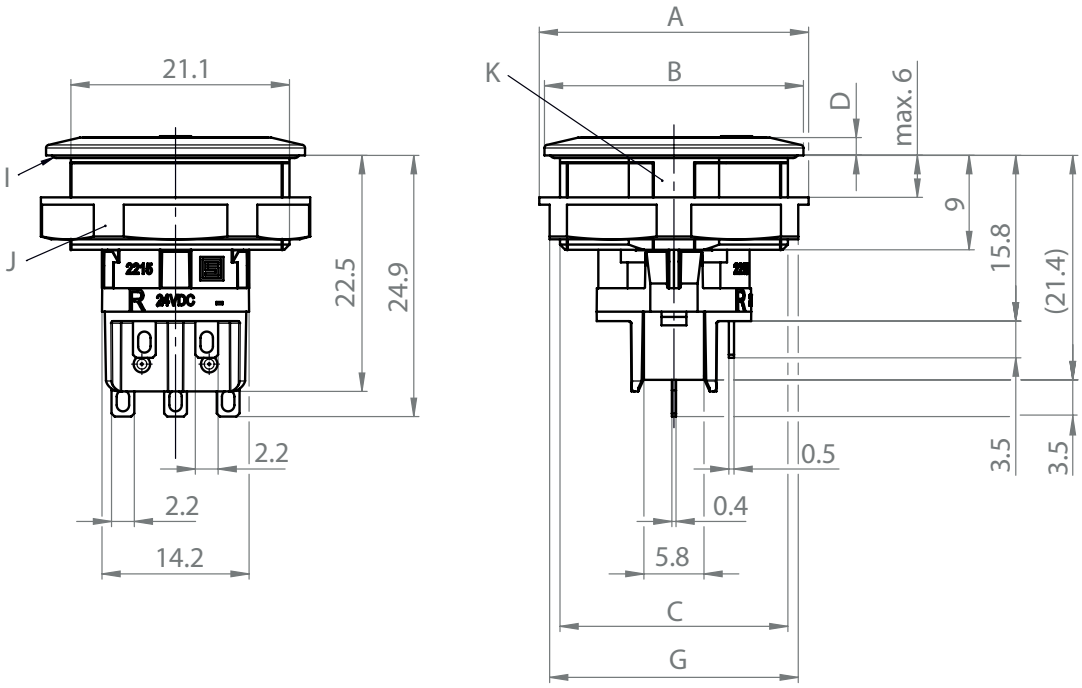

MSM II PI/RI DPDT with Subminiature Microswitch and Quick Solder Terminal

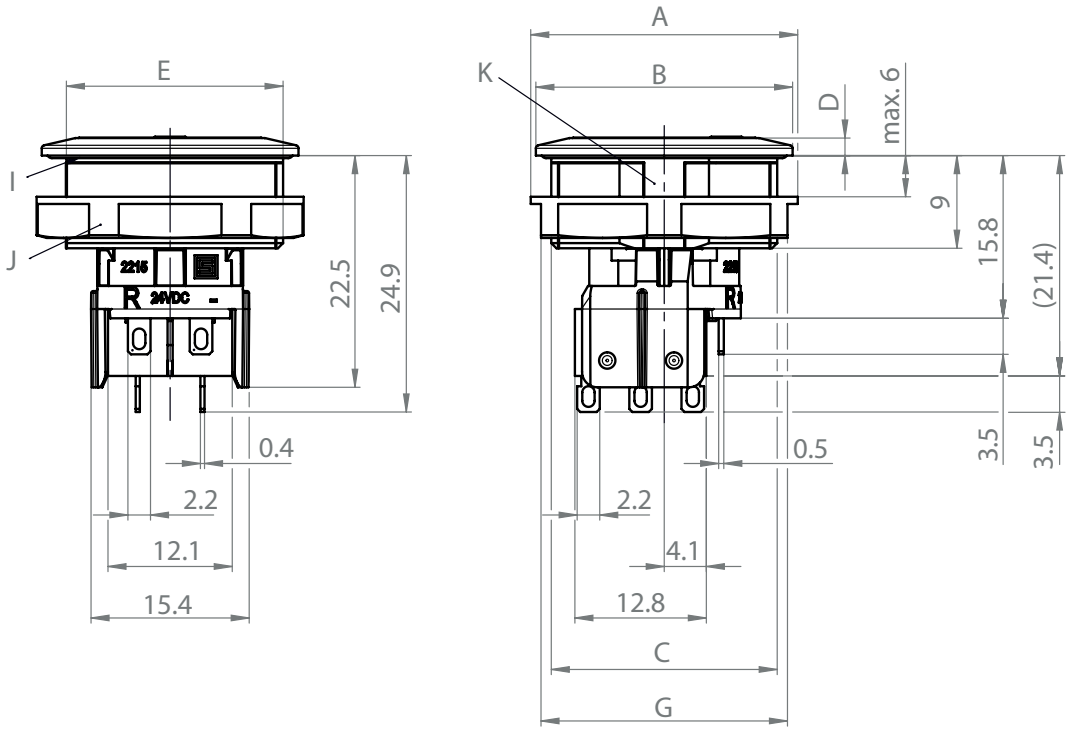

MSM II AI SPDT with Microswitch and Quick Connect Terminal

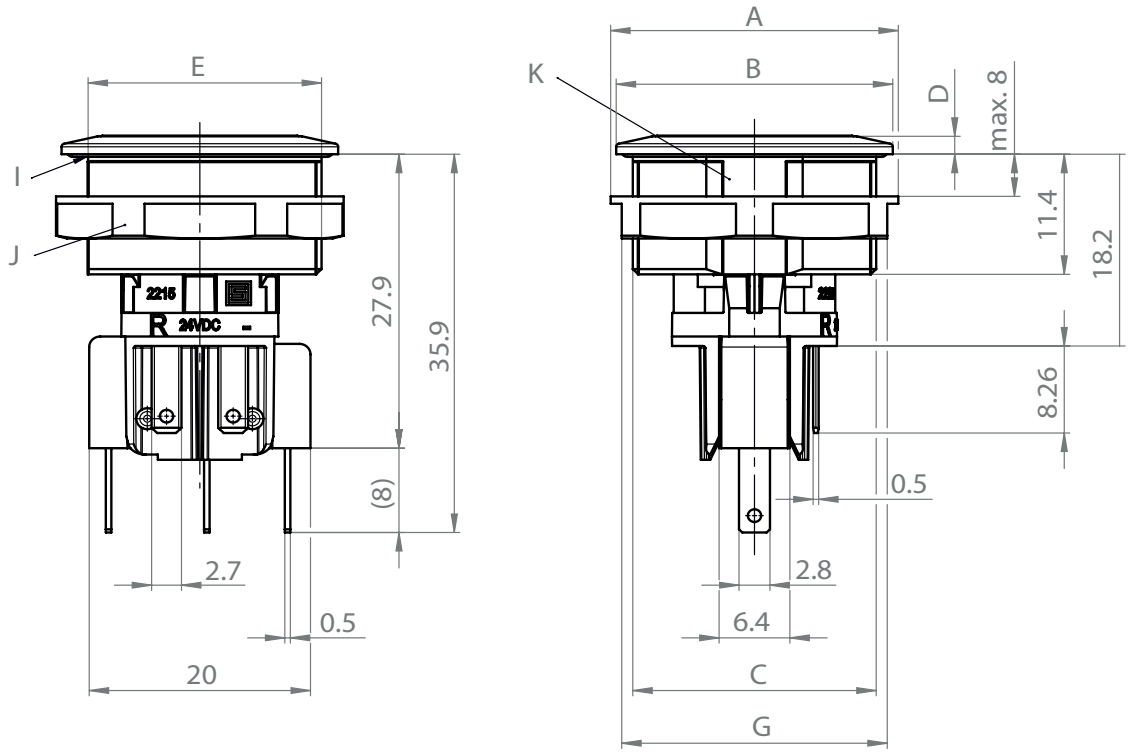

MSM II AI SPDT with Subminiature Microswitch and Quick Solder Terminal

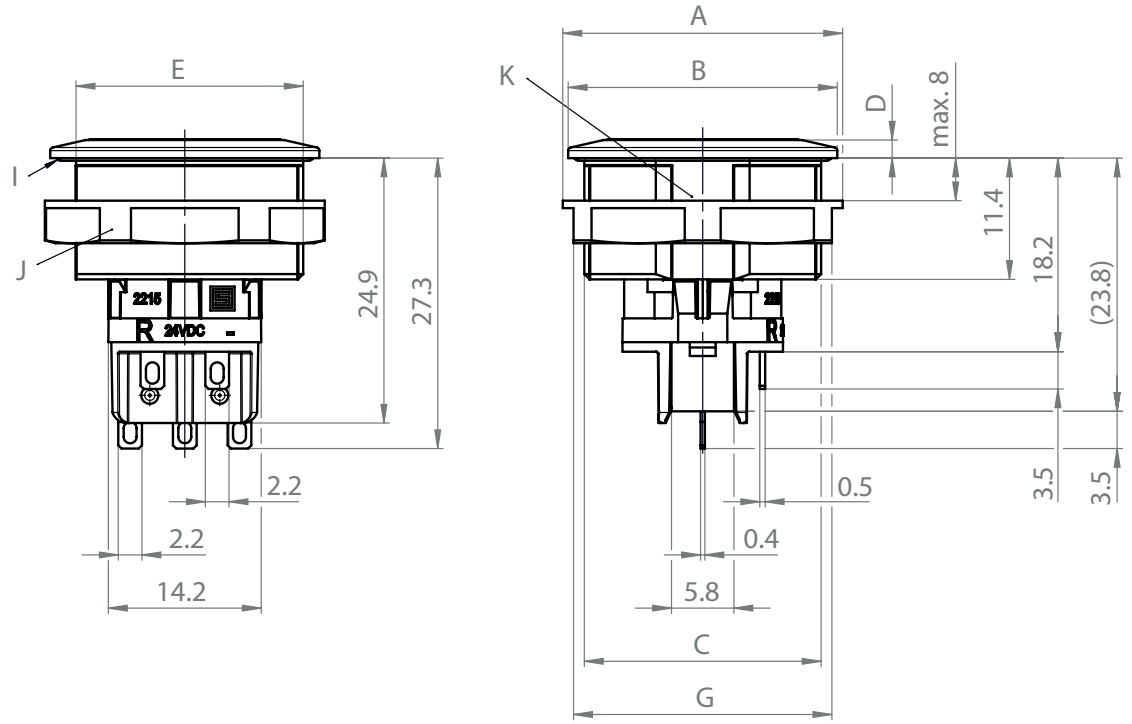

MSM II AI DPDT with Subminiature Microswitch and Quick Solder Terminal

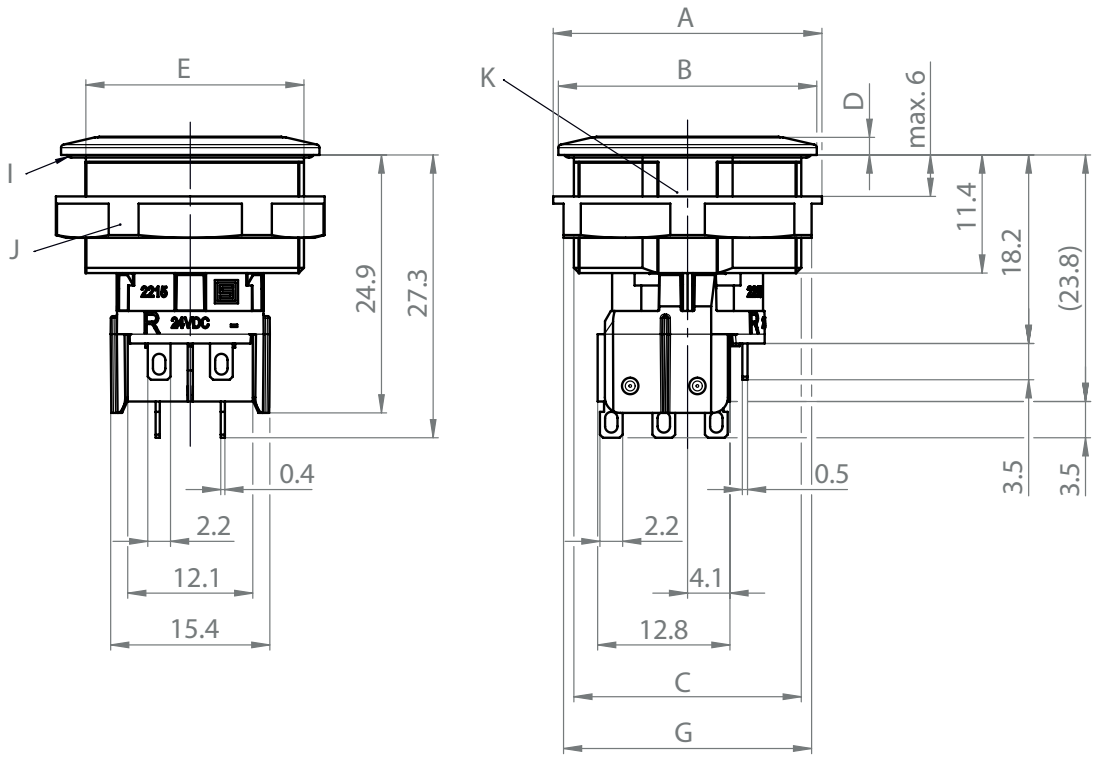

Indicator

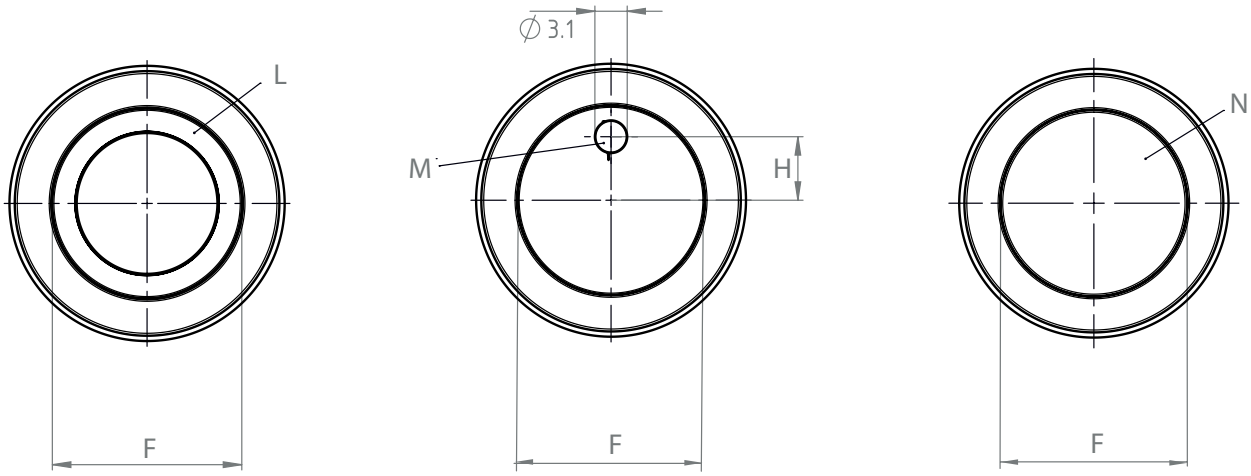

Ring illumination(RI) | Point illumination(PI) | Area illumination (AI)

MSM II Indicator with Quick Connect Terminal

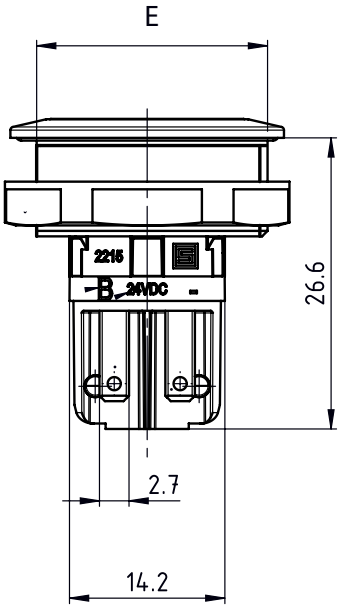

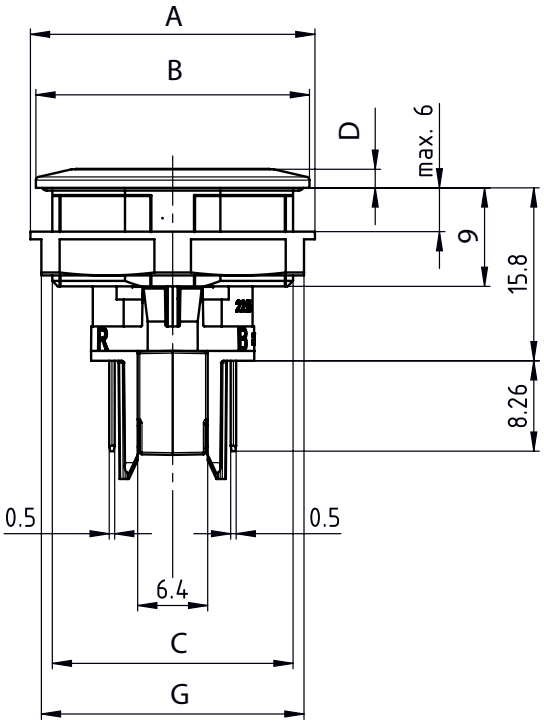

MSM II Indicator with Quick Solder Terminal

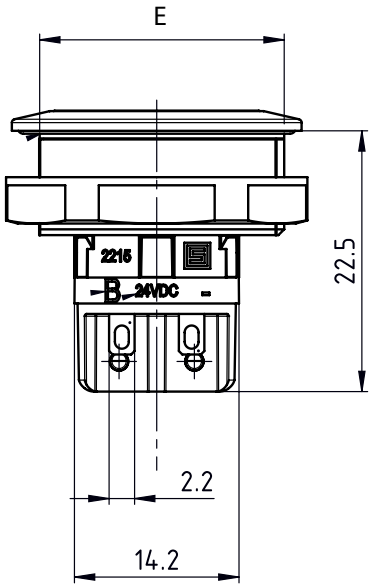

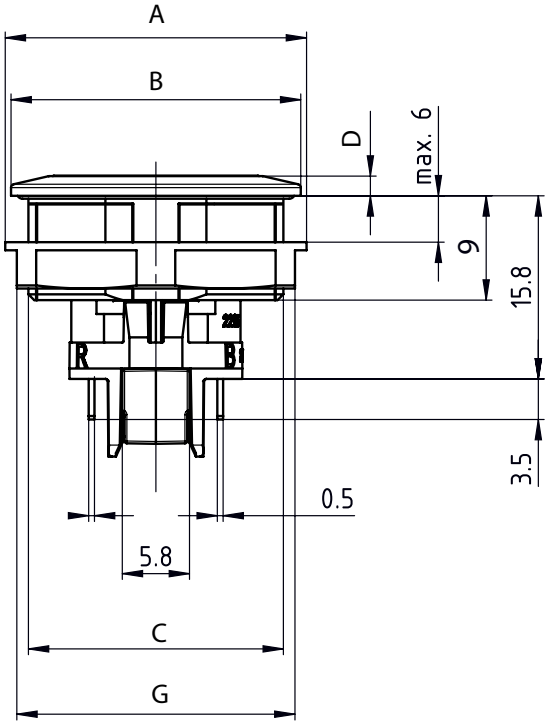

Diameter in mm	16	19	22	30
A	Ø20	Ø24	Ø26	Ø34.5
B	Ø19	Ø22	Ø25	Ø34
C	M16x1	M19x0.75	M22x1	M30x1.5
D	1.7	1.7	1.7	2
E	15.1	18.1	21.1	28.8
F Operating area / illumination area	Ø12.8	Ø15.8	Ø18	Ø25
G	AF19	AF22	AF24	AF32
H	4.3	5.3	6.05	8.4
I	O-Ring			
J	Nut			
K	Anti-rotation lock			
L	Lighting ring			
M	Point illumination			
N	Area illumination			

Dimension

All illuminated products and all non illuminated push buttons with symbols are supplied with anti-rotation protection

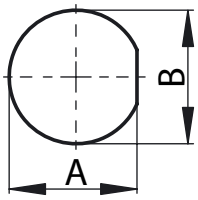

Non-illuminated push-buttons are supplied without anti-rotation protection

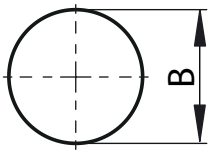

Diameter (mm)	A	B
16	15.15+0.05	16.1 +0.1
19	18.15+0.05	19.1 +0.1
22	21.15+0.05	22.1 +0.1
24	23.50+0.05	24.1 +0.1
30	28.85+0.05	30.1 +0.1

Diagrams

Switching element SPDT

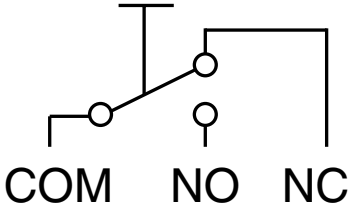

Switching element DPDT

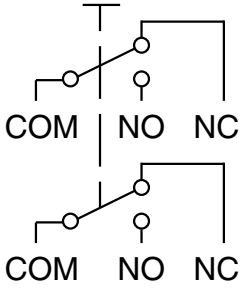

Illumination single color
Terminal assignment without series resistor

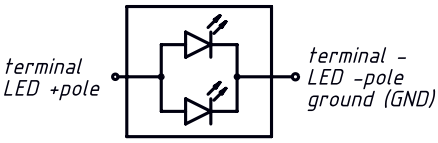

Illumination RGB
Terminal assignment without series resistor

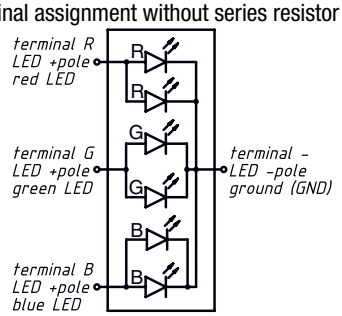

Illumination single color
Terminal assignment with resistors for 5 VDC

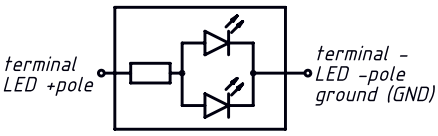

Illumination RGB
Terminal assignment with resistors for RGB 5 VDC

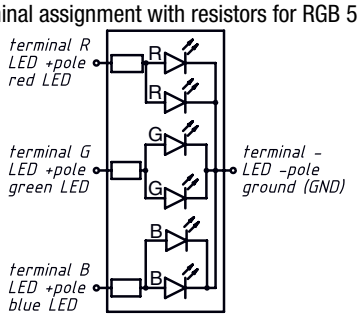

Illumination single color
Terminal assignment with resistors for 12 VDC and 24 VDC

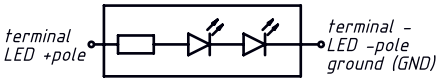

Illumination RGB
Terminal assignment with resistors for RGB 12 VDC and 24 VDC

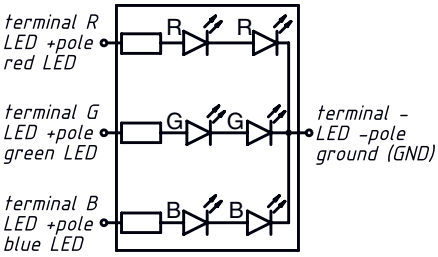

Illumination options for RGB

Lighting type	Wire red	Wire green	Wire blue	Resulting Color
Multicolor Singlecolor	x			Red
Multicolor Singlecolor		x		Green
Multicolor Singlecolor			x	Blue
Multicolor RGB Additive 2	x	x		Yellow
Multicolor RGB Additive 2	x		x	Magenta
Multicolor RGB Additive 2		x	x	Cyan
Multicolor RGB Additive 3	x	x	x	White

Illumination

Operating Data	Forward Current max.	Forward Voltage at 10 mA	Forward Voltage max.
LED red	25 mA	1,7 VDC	2,4 VDC
LED green	25 mA	2,6 VDC	3,2 VDC
LED blue	25 mA	2,6 VDC	3,2 VDC

Micro Switch

Micro Switch	Contact Material	Switching Voltage	Switching current	Rated Switching Capacity	Lifetime	Contact Resistance	Insulation Resistance	Duration of Bounce
0.1 A, IP40	Au	max. 30 VDC	max. 0.1 A	3 W	0.2 Mio.	< 50 mΩ	> 100 MΩ	< 5 ms
0.1 A, IP67		max. 30 VDC	max. 0.1 A	25 W	0.05 Mio.			
5 A / 125 VAC bzw. 3 A / 250 VAC, IP40	Ag	max. 125 / 250 VAC	max. 5 / 3 A	750 W	0.2 Mio.	< 30 mΩ	> 100 MΩ	< 5 ms
6 A, IP67		max. 250 VAC	max. 5 A	1250 W	0.01 Mio.			
10 A, IP40	Ag	max. 250 VAC	max. 10 A	2500 W	0.05 Mio.	< 30 mΩ	> 100 MΩ	< 5 ms
10 A, IP67		max. 250 VAC	max. 10 A	2500 W	0.01 Mio.			

Subminiature Microswitch

Subminiature Microswitch	Contact Material	Switching Voltage	Switching current	Rated Switching Capacity	Lifetime	Contact Resistance	Insulation Resistance	Duration of Bounce
0.1 A, IP40	Au	max. 30 VDC	max. 0.1 A	3 W	0.1 Mio.	< 100 mΩ	> 100 MΩ	< 10 ms
3 A , IP40	Ag	max. 125 VAC	max. 3 A	375 W	0.03 Mio.	< 30 mΩ	> 100 MΩ	< 10 ms

Order number key

M	S	M	II	-	19	-	MO	NX	A10	-	B	1	-	B	A0	-	A	-	PI	0GN	012	A0	-	S0	NC	B	-	S0	NC	NF	-	1	074	-	C
					1		2				3						4		5	6	7			*	*			8				*	9		*

Diameter		1
16 mm 1)	=	16
19 mm	=	19
22 mm	=	22
30 mm 2)	=	30

Switch function		2
Switch	=	MONX
Indicator element	=	0000

Design		3
Switches		
Switch with Microswitch SPDT / quick connect		
100 mA Gold contact	=	A10-B1-AA0
3 A	=	03A-B1-BA0
5 A	=	05A-B1-BA0
6 A	=	06A-B1-BA0
10 A	=	10A-B1-BA0
Switch with Subminiature SPDT / solder terminal		
100 mA Gold contact	=	A10-B2-AE0
3 A	=	03A-B2-BE0
Switch with Subminiature DPDT / solder terminal		
100 mA Gold contact	=	A10-D3-AE0
3 A	=	03A-D3-BE0
Indicator Elements		
Indicator element with quick connect	=	000-01-0-00
Indicator element with solder terminal	=	000-02-0-00

Microswitch version		4
IP40 (100 mA, 3 A, 5 A, 10 A)	=	A
IP67 (100 mA, 3 A, 6 A, 10 A)	=	B***

Illumination / Appearance		5
No illumination	=	00
No illumination with colored ring	=	RC
Area illumination	=	AI
Ring illumination	=	RI
Point illumination	=	PI
Ring illumination Discreet/DeadFront	=	RD

Illumination / Color		6
None	=	000
Red	=	0RD
Green	=	0GN
Blue	=	0BL
Yellow	=	0YL
White	=	0WT
Multicolor 1)	=	RGB

Supply voltage illumination		7
None	=	000
5 V	=	005
12 V	=	012
24 V	=	024

Housing material and color			*
Stainless steel 1.4305	(Silver)	=	S0NC
Aluminum EN AW-6082 (3.3215)	(Black)	=	A0BK

Actuator material			8
Stainless steel 1.4305	(Silver)	=	S0NC
Ceramic (only with stainless steel)	(White)	=	C0WT
Aluminum (only on RD version)	(Black)	=	A0BK

Lettering type		*
None	=	0
Laser marking	=	1

Marking type		9
None	=	000
Lettering symbol		
STOP	=	057
ON	=	065
OFF	=	066
ON/OFF	=	071
START	=	072
⏻	=	074
💡	=	075
🔔	=	076
ⓘ	=	077

further lettering on request

Accessories		*
Hex nut plastic with O-ring	=	C

Stainless steel nut can be ordered additionally

0098.9260	Stainless steel nut M16
0098.9250	Stainless steel nut M19
0098.9253	Stainless steel nut M22
0098.9216	Stainless steel nut M30

1) Not available for DPDT
2) 30 mm diameter not available with Area Illumination

* Values marked with an asterisk depend on the selected properties.
*** All Indicator elements have IP rate 67 also from backside

Variants

Diameter	Switching current	Electrical contact	Style	IP specification backside	Illumination	Illumination color	Supply Voltage LED	Order Number
16	100mA	SPDT	1)	IP40	non-illuminated	-	-	3-145-122
16	5A	SPDT	1)	IP40	non-illuminated	-	-	3-145-273
16	-	-	1)	IP67	RI	RGB	24	3-148-084
16	-	-	1)	IP67	RI	RGB	5	3-148-278
16	-	-	2)	IP67	RI	RGB	5	3-148-279
16	-	-	1)	IP67	AI	RGB	5	3-148-339
16	-	-	2)	IP67	AI	RGB	5	3-148-342
16	-	-	1)	IP67	RI	RGB	12	3-148-345
16	-	-	2)	IP67	RI	RGB	12	3-148-355
16	-	-	1)	IP67	AI	RGB	12	3-148-356
16	-	-	2)	IP67	AI	RGB	12	3-148-357
16	-	-	2)	IP67	RI	RGB	24	3-148-372
16	-	-	1)	IP67	AI	RGB	24	3-148-392
16	-	-	2)	IP67	AI	RGB	24	3-148-396
19	100mA	SPDT	1)	IP40	RI	red	24VDC	3-145-448
19	100mA	SPDT	1)	IP40	AI	RGB	24VDC	3-145-539
19	5A	SPDT	1)	IP40	non-illuminated with colo-red ring	red	-	3-145-556
19	5A	SPDT	1)	IP40	non-illuminated with colo-red ring	green	-	3-145-559
19	5A	SPDT	1)	IP40	RI DeadFront	RGB	24VDC	3-145-567
19	3A	DPDT	3)	IP40	non-illuminated	-	-	3-145-766
19	3A	DPDT	3)	IP40	PI	green	-	3-145-768
19	3A	DPDT	3)	IP40	PI	blue	-	3-146-007
19	-	-	1)	IP67	RI	RGB	5	3-148-398
19	-	-	1)	IP67	AI	RGB	5	3-148-400
19	-	-	2)	IP67	AI	RGB	5	3-148-401
19	-	-	1)	IP67	RI	RGB	12	3-148-412
19	-	-	2)	IP67	RI	RGB	12	3-148-413
19	-	-	1)	IP67	AI	RGB	12	3-148-414
19	-	-	2)	IP67	AI	RGB	12	3-148-415
19	-	-	1)	IP67	RI	RGB	24	3-148-416
19	-	-	2)	IP67	RI	RGB	24	3-148-417
19	-	-	1)	IP67	AI	RGB	24	3-148-418
19	-	-	2)	IP67	AI	RGB	24	3-148-419
19	-	-	2)	IP67	RI	RGB	5	3-148-420
22	5A	SPDT	1)	IP40	non-illuminated	-	-	3-145-478
22	10A	SPDT	1)	IP40	non-illuminated	-	-	3-145-479
22	100mA	SPDT	1)	IP40	RI	red	24VDC	3-145-527
22	100mA	SPDT	1)	IP40	RI	blue	24VDC	3-145-534
22	100mA	SPDT	1)	IP40	RI	yellow	24VDC	3-145-535
22	100mA	SPDT	1)	IP40	RI	RGB	24VDC	3-145-546
22	100mA	SPDT	1)	IP40	RI DeadFront	RGB	24VDC	3-145-729
22	100mA	SPDT	1)	IP40	RI	red	12VDC	3-145-731
22	100mA	SPDT	1)	IP40	RI	green	12VDC	3-145-742
22	100mA	SPDT	1)	IP40	RI	red	5VDC	3-145-746
22	100mA	SPDT	1)	IP40	RI	green	5VDC	3-145-747
22	5A	SPDT	1)	IP40	RI	blue	5VDC	3-145-749
22	100mA	SPDT	1)	IP40	RI	white	5VDC	3-145-751
22	100mA	SPDT	1)	IP40	PI	blue	-	3-145-777

Diameter	Switching current	Electrical contact	Style	IP specification backside	Illumination	Illumination color	Supply Voltage LED	Order Number
22	3A	DPDT	3)	IP40	non-illuminated	-	-	3-145-879
22	100mA	SPDT	1)	IP40	AI	RGB	24VDC	3-145-891
22	3A	DPDT	3)	IP40	RI	white	24VDC	3-145-920
22	-	-	1)	IP67	RI	RGB	5	3-148-421
22	-	-	2)	IP67	RI	RGB	5	3-148-422
22	-	-	1)	IP67	AI	RGB	5	3-148-423
22	-	-	2)	IP67	AI	RGB	5	3-148-424
22	-	-	1)	IP67	RI	RGB	12	3-148-425
22	-	-	2)	IP67	RI	RGB	12	3-148-426
22	-	-	1)	IP67	AI	RGB	12	3-148-427
22	-	-	2)	IP67	AI	RGB	12	3-148-428
22	-	-	1)	IP67	RI	RGB	24	3-148-429
22	-	-	2)	IP67	RI	RGB	24	3-148-430
22	-	-	1)	IP67	AI	RGB	24	3-148-431
22	-	-	2)	IP67	AI	RGB	24	3-148-432
30	5A	SPDT	1)	IP40	non-illuminated	-	-	3-145-589
30	5A	SPDT	1)	IP40	RI DeadFront	RGB	24VDC	3-145-657
30	3A	DPDT	3)	IP40	RI	red	24VDC	3-146-043
30	3A	DPDT	3)	IP40	RI	green	24VDC	3-146-044
30	-	-	1)	IP67	RI	RGB	5	3-148-433
30	-	-	2)	IP67	RI	RGB	5	3-148-434
30	-	-	1)	IP67	RI	RGB	12	3-148-435
30	-	-	2)	IP67	RI	RGB	12	3-148-436
30	-	-	1)	IP67	RI	RGB	24	3-148-437
30	-	-	2)	IP67	RI	RGB	24	3-148-438

Most Popular.

Availability for all products can be searched real-time:https://www.schurter.com/en/Stock-Check/Stock-Check-SCHURTER

1) Microswitch SPDT / Indicator with quick connect terminals

2) Subminiature Switch SPDT / Indicator with solder terminals

3) Subminiature Switch DPDT with solder terminals

Packaging unit 10 pcs. In box or packed in air cushion bags

The nut with gasket and micro switch are enclosed in the box.

27.02.2024

The specifications, descriptions and illustrations indicated in this document are based on current information. All content is subject to modifications and amendments. Information furnished is believed to be accurate and reliable. However, users should independently evaluate the suitability and test each product selected for their own applications.