About Amphenol Aerospace

Your Source for Interconnect Products

Micro38999

Amphenol Aerospace

Amphenol Aerospace, Amphenol Commercial Air, and Amphenol Industrial Operations Main Facility in Sidney, NY USA

Contact Us:

Amphenol Aerospace
40-60 Delaware Avenue
Sidney, NY 13838-1395

Customer Service:
Mon - Fri 8AM - 5PM
Phone: (800) 678-0141
Fax: (607) 563-5157
Online: www.amphenol-aerospace.com

About Amphenol Aerospace:

Amphenol Aerospace, a Division of Amphenol Corporation, is one of the largest manufacturers of interconnect products in the world for the Military, Commercial Aerospace and Industrial markets. Amphenol designs, manufactures and markets circular and rectangular, electronic, fiber optic, EMI/EMP filter, and a variety of special applications connectors and interconnect systems.

Our state-of-the-art facility is nestled at the foothills of the Catskill Mountains in Sidney, NY. The Amphenol complex houses many technologies including CNC machining, die-casting, molding, impact and extruding, plating, screw machining and process controls. Our fully equipped material evaluation lab and engineering organization utilize the latest in computer aided design software and analysis tools, allowing us to design, test, and qualify advanced interconnect systems. Amphenol's interconnect products are supplied to thousands of OEMs worldwide and are supported by our worldwide sales and engineering force, including the largest global network of electronic distributors.

CARE

Customer-Centric:
Our **#1 priority** is our customers who deserve quality product on time.

Accountable:
Clear owners, clear actions, clear results.

Reliable:
What we build matters and quality is imperative.

Enthusiastic:
Challenges create rewarding opportunities. Enthusiasm is contagious and we will spread it.

Quality Assurance:

Amphenol Aerospace has been awarded both AS9100 - Revision C and ISO9001:2008 Quality Assurance Certifications.

Micro38999 Reference Guide

A TECHNICAL REFERENCE

2M Series Selection Table		3
Size & Weight Comparison Chart		4, 5
Insert Arrangements		6-9
Straight PCB Footprints		10-20

B PERFORMANCE SPEC

Materials Finishes	Specifications	21-27

C 2M805

Specs/ Info	2M805 Overview	28
How to Order	Plugs & Receptacles	29
How to Order	High Speed Plugs & Receptacles	30
Weight	Connector Weight	31
Plug	2M805-001, 002	32
In-Line Receptacle	2M805-003-01, 004-01	33
Square Flange Receptacle	2M805-003-02, 004-02	34
Jam Nut	2M805-003-07, 004-07	35
PCB Solder Cup Sq Flange	2M805-005-02, 017-02	36
PCB Solder Cup Jam Nut	2M805-005-07, 017-07	37
PCB Standoff Double Flange	2M805-067-07	38
How to Order	Protection Caps	39
Protection Cap	2M667-261, 262	40

D 2M804

Specs/ Info	2M804 Overview	41
How to Order	Plugs & Receptacles	42
Weight	Connector Weight	43
Plug	2M804-001-06, 002-06	44
Jam Nut Rear Panel	2M804-003-07, 004-07	45
Jam Nut Front Panel	2M804-003-00, 004-00	46
In-Line Receptacle	2M804-003-01, 004-01	47
PCB Solder Rear Jam Nut	2M804-005-07, 020-07	48
PCB Solder Cup Recpt	2M804-005-00, 020-00	49
Jam Nut Panel Mount Plug	2M804-009-07, 021-07	50
Jam Nut Front Panel Plug	2M804-009-00, 021-00	51
Flange Panel Mount Plug	2M804-009-02, 021-02	52
PCB Standoff Double Flange	2M804-025-07	53
How to Order Protect Caps	2M667-202	54
How to Order Protect Caps	2M809-198	55
Protection Caps	2M809-198, 2M667-202	56
How to Order Plug Rubber	2M809-083, 087	57
Plug Rubber Caps	2M809-083, 087	58

E 2M803

Specs/ Info	2M803 Overview	59
How to Order	Plugs & Receptacles	60
Weight	Connector Weight	61
Plug	2M803-001-06, 002-06	62
Jam Nut	2M803-003-70, 004-07	63
Flange Mount	2M803-003-02, 004-02	64
In-Line Recpt	2M803-003-01, 004-01	65
PCB Flange Mt Jam Nut	2M803-005-02, 07	66
How to Order Protect Caps	2M660-082, 083	67
Protection Caps	2M660-082, 083	68

F 2M801

Specs/ Info	2M801 Overview	69
How to Order	Plugs & Receptacles	70
How to Order	High Speed Plugs & Receptacles	71
Weight	Connector Weight	72
Plug	2M801-007, 008	73
Jam Nut	2M801-009-07, 010-07	74
Square Flange	2M801-009-02, 010-02	75
In-Line Recpt	2M801-009-01, 010-01	76
PCB Flange Mt & Jam Nut	2M801-011, 033	77
PCB Right Angle Jam Nut	2M801-023-07	78
PCB Standoff Double Flange	2M801-033-07	79
How to Order Protect Caps	2M667-217, 218	80
Protection Caps	2M660-082	81
Protection Caps	2M660-083	82

G HERMETIC

Specs/ Info Hermetic	Overview	83
How to Order 2M805	2M805-006	84
Flange Mount	2M805-006-02	85
Solder Mount	2M805-006-03	86
Jam Nut	2M805-006-07	87
How to Order 2M804	2M804-006	88
Jam Nut	2M804-006-07	89
Front Panel Jam Nut	2M804-006-00	90
How to Order 2M803	2M803-006	91
Flange Mount/ Jam Nut	2M803-006-02, 07	92
How to Order 2M801	2M801-012	93
Jam Nut	2M801-012-07	94
Square Flange	2M801-012-02	95
Weld Mount	2M801-012-03	96

H FILTER

Advantages	Overview	97
Attenuation Characteristics		98

J ACCESSORIES

Accessories, Contacts, Tools	Table of Content	99
Contact/Tools	Torque Values	100
Assembly Instructions	2M Series	101, 102
Sealing Plugs/ Tools	Grommet, Spanner, Holding	103. 104
Strain Relief Clamp	2M620MS064, 065	105, 106
Micro Band Adapter	Thread/ Low Profile	107, 110
Environmental Backshells		111-112
EMI Backshells		113-117
Shorting Cap Backshell		118, 119
Shrink Boot	2M809S06, 2M809A060	120, 121
Hex Jam Nuts	2M809-035	122
Flange Gaskets	2M809-106	123, 124
O-Ring	2M809-109	125

2M Series Selection Table

2M801, 2M803, 2M804 and 2M805

Micro38999

SERIES	2M805	2M804	2M803	2M801
Pages	Pages 28-39	Pages 40-57	Pages 58-67	Page 68-80
TYPE	Tri-Start ACME Thread	Push-Pull	Bayonet	Dual-Start ACME Thread
DESCRIPTION	"Anti-Decoupling" ratchet mechanism and ground spring for military airframes and avionics boxes. Fast mating.	Breakaway connector for headsets and tactical equipment. Gold-plated spring for long mating life and superior EMI shielding.	Quick-mating, light duty, general purpose. Not rated for immersion, 50 milliohms shell-to-shell resistance.	More rugged keys and threads. Faster mating.
CONTACTS	1 to 130	1 to 85	1 to 55	1 to 130
COUPLING	Tri-Start Thread	Push, Pull Quick-Disconnect	1/4 turn lock Bayonet	Threaded Coupling with 1 1/2 Turns to Full Mate
WATER IMMERSION, MATED	MIL-STD-810 Method 512 1 Meter for 1 Hour	MIL-STD-810 Method 512 1 Meter for 1 Hour	Splashproof	MIL-STD-810 Method 512 1 Meter for 1 Hour
EMI SHIELDING	Excellent	Excellent	Fair	Very Good
VIBRATION AND SHOCK	43.9 g's Random Vibration, Sine Vibration 60 g; 300 g's Shock	37 g's Random Vibration; 300 g's Shock	37 g's Random Vibration; 300 g's Shock	43.9 g's Random Vibration, Sine Vibration 60 g; 300 g's Shock
MATING CYCLES	500 Cycles	2000 Cycles	1000 Cycles Aluminum 2000 Cycles Stainless Steel	2000 Cycles (-16 Plugs) 500 Cycles (-26 Plugs)
ELECTRICAL PERFORMANCE	#12: 23 AMP, 1800 VAC #16: 13 AMP, 1800 VAC #20: 7.5 AMP, 1000 VAC #23: 5 AMP, 750 VAC	#12: 23 AMP, 1800 VAC #16: 13 AMP, 1800 VAC #20: 7.5 AMP, 1000 VAC #23: 5 AMP, 750 VAC	#12: 23 AMP, 1800 VAC #16: 13 AMP, 1800 VAC #20: 7.5 AMP, 1000 VAC #23: 5 AMP, 750 VAC	#12: 23 AMP, 1800 VAC #16: 13 AMP, 1800 VAC #20: 7.5 AMP, 1000 VAC #23: 5 AMP, 750 VAC
FILTERED	See pages 95, 96	See pages 95, 96	See pages 95, 96	See pages 95, 96

Size & Weight Comparison Charts

2M805 VS. D38999 Series III

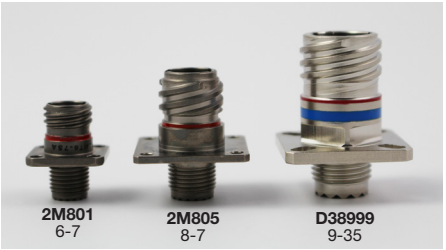

2M805 Series

Weight Comparison: 2M805 VS. D38999 Series III

2M805 Layout	Number of Contacts	D38999 Layout	Number of Contacts	2M805 Weight	D38999 Aluminum	% Weight Savings	D38999 Composite	% Weight Savings
8-7	7 #23	9-35	6 #20	13.4	26.3	49%	19.9	33%
10-13	13 #23	11-35	13 #22D	23.0	35.7	36%	26.8	14%
11-19	19 #23	13-35	19 #22D	26.4	50.7	48%	38.5	31%
12-26	26 #23	17-26	26 #20	29.4	58.5	50%	62.6	53%
15-37	37 #23	15-35	37 #22D	42.7	72.1	41%	57.4	26%
18-55	55 #23	17-35	55 #22D	59.6	81.6	27%	65.6	9%
19-85	85 #23	21-35	85 #22D	59.8	119.7	50%	99.1	40%
23-130	130 #23	25-35	128 #22D	85.5	159.3	46%	136.6	37%

Size Comparison: 2M805 VS. D38999 Series III

2M805 Layout	Maximum Plug Diameter					Maximum Jam Nut Receptacle Diameter				
	2M805		D38999		% Reduction	2M805		D38999		% Reduction
	In.	mm.	In.	mm.		In.	mm.	In.	mm.	
8-7	.707	17.96	.859	21.81	17%	.775	19.69	1.201	30.51	35%
10-13	.804	20.42	.969	24.61	18%	.895	22.73	1.386	30.50	35%
11-19	.933	23.70	1.141	28.98	20%	.960	24.38	1.512	38.40	36%
12-26	.999	25.37	1.391	35.33	29%	1.075	27.31	1.764	44.81	39%
15-37	1.113	28.27	1.266	32.16	13%	1.218	30.86	1.638	41.61	26%
18-55	1.308	33.02	1.391	35.33	7%	1.404	35.66	1.764	44.81	20%
19-85	1.328	33.73	1.625	41.27	19%	1.465	37.21	2.075	52.71	29%
23-130	1.577	40.06	1.875	47.63	16%	1.720	43.69	2.323	59.00	26%

Note: Weights shown include contacts and represent a mated pair of plug and jam nut receptacle.
Weights are in grams.

Size & Weight Comparison Charts

2M801 VS. D38999 Series III

Micro38999

2M801 Series

Weight Comparison: 2M801 VS. D38999 Series III

2M801 Layout	Number of Contacts	D38999 Layout	Number of Contacts	2M801 Weight	D38999 Aluminum	% Weight Savings	D38999 Composite	% Weight Savings
5-3	3	9-98	3	7.9	25.3	69%	19.9	60%
6-7	7	9-35	6	9.8	26.3	63%	19.9	51%
9-19	19	13-35	22	18.8	50.7	63%	38.5	51%
13-37	37	15-35	37	36.0	72.1	50%	57.4	37%
16-55	55	17-35	55	49.8	81.6	39%	65.6	24%
17-85	85	21-35	79	54.3	119.7	55%	99.1	45%
21-130	130	25-35	128	68.7	159.3	57%	136.6	50%

Size Comparison: 2M801 VS. D38999 Series III

2M801 Layout	Cable Plug Diameter					Jam Nut Receptacle Diameter				
	2M801		D38999		% Reduction	2M801		D38999		% Reduction
	In.	mm.	In.	mm.		In.	mm.	In.	mm.	
5-3	.540	13.72	.859	21.82	37%	.575	14.61	1.204	30.58	52%
6-7	.600	15.24	.859	21.82	30%	.635	16.13	1.204	30.58	47%
9-19	.810	20.57	1.156	29.36	30%	.830	21.08	1.516	38.51	45%
13-37	1.050	26.67	1.281	32.54	18%	1.078	27.38	1.641	41.68	34%
16-55	1.240	31.50	1.406	35.71	12%	1.264	32.11	1.766	44.86	28%
17-85	1.300	33.02	1.641	41.68	21%	1.325	33.66	2.078	52.78	36%
21-130	1.550	39.37	1.890	48.01	18%	1.625	41.28	2.323	59.00	30%

Note: Weights shown include contacts and represent a mated pair of plug and jam nut receptacle.
Weights are in grams.

2M Series Technical Information

Inserts Arrangements

SERIES 2M INSERT ARRANGEMENTS

CONTACT SIZE	CONTACT QUANTITY					INSERT ARRANGEMENT			
	#23	#20	#20HD	#16	#12	2M801	2M803	2M804	2M805
Size #23 Contacts 5 Amp Max. Current 750 VAC #22-#28 AWG	3					5-3	5-3	5-3	NA
	4					6-4	6-4	6-4	8-4
	6					6-6	6-6	6-6	8-6
	7					6-7	6-7	6-7	8-7
	10					7-10	7-10	7-10	9-10
	13					8-13	8-13	8-13	10-13
	19					9-19	9-19	9-19	11-19
	26					10-26	10-26	10-26	12-26
	37					13-37	12-37	12-37	15-37
	55					16-55	14-55	14-55	18-55
	85					17-85	15-85	15-85	19-85
	130					21-130	NA	NA	23-130
Size #20HD Contacts 7.5 Amp Max. Current 1000 VAC #20-#24 AWG.			3			6-23	6-23	6-23	8-23
			5			7-25	7-25	7-25	9-25
			8			8-28	8-28	8-28	10-28
			10			9-210	9-210	9-210	11-210
			20			13-220	12-220	12-220	15-220
			35			16-235	14-235	14-235	18-235
			41			17-241	NA	NA	19-241
			69			21-269	NA	NA	23-269
Size #16 Contacts 13 Amp Max. Current 1800 VAC #16-#20 AWG				1		6-1	6-1	6-1	8-1
				2		8-2	8-2	8-2	10-2
				4		9-4	9-4	9-4	11-4
				5		10-5	10-5	10-5	12-5
				7		13-7	12-7	12-7	15-7
				12		16-12	14-12	14-12	18-12
				14		17-14	15-14	15-14	19-14
				22		21-22	NA	NA	23-22
Size #12 Contacts 23 Amp Max. Current 1800 VAC #12-14 AWG					1	7-1	7-1	7-1	9-1
					2	10-2	10-2	10-2	12-2
					2	13-2	12-2	12-2	15-2
					3	13-3	12-3	12-3	15-3
					5	16-5	14-5	14-5	18-5
					7	17-7	15-7	15-7	19-7
					12	21-12	NA	NA	23-12
Insert Arrangements with Mixed Size (Combo) Layouts	4	2				8-200	8-200	8-200	10-200
	8	2				9-201	9-201	9-201	11-201
	4			2		9-200	9-200	9-200	11-200
	8			2		10-202	10-202	10-202	12-202
	4				2	10-201	10-201	10-201	12-201
	6				2	13-200	12-200	12-200	15-200
	10				2	13-201	12-201	12-201	15-201
	12				1	10-200	10-200	10-200	12-200

2M Series Technical Information

Insert Arrangements

Micro38999

Front face of pin inserts illustrated (Socket Reversed)

CONTACT LEGEND 12 16 20 20HD 20 23

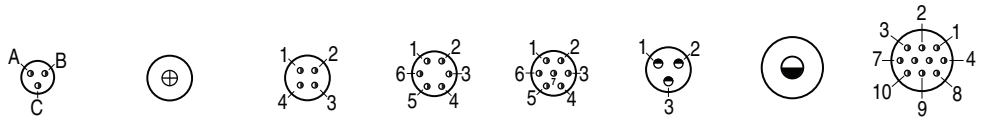

2M801 2M803 2M804	**5-3**	**6-1***	**6-4**	**6-6**	**6-7**	**6-23**	**7-1***	**7-10**
2M805	**NA**	**8-1***	**8-4**	**8-6**	**8-7**	**8-23**	**9-1***	**9-10**
No. of Contacts	3	1	4	6	7	3	1	10
Contact Size	#23	#16	#23	#23	#23	#20HD	#12	#23
DWV Voltage (VAC)	750	1800	750	750	750	1000	1800	750
Current Rating (Amps)	5	13	5	5	5	7.5	23	5

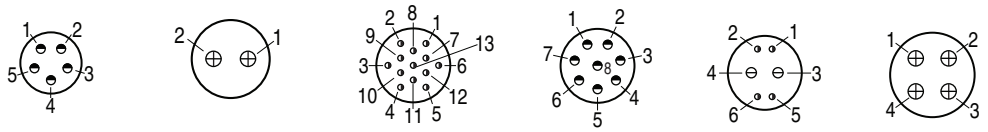

2M801 2M803 2M804	**7-25**	**8-2**	**8-13**	**8-28**	**8-200***		**9-4**
2M805	**9-25**	**10-2**	**10-13**	**10-28**	**10-200***		**11-4**
No. of Contacts	5	2	13	8	2	4	4
Contact Size	#20HD	#16	#23	#20HD	#20	#23	#16
DWV Voltage (VAC)	1000	1800	750	1000	1000	750	1800
Current Rating (Amps)	7.5	13	5	7.5	7	5	13

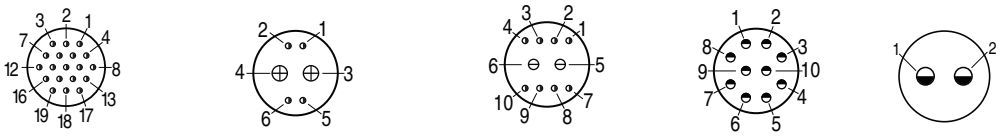

2M801 2M803 2M804	**9-19**	**9-200**		**9-201**		**9-210**	**10-2**
2M805	**11-19**	**11-200**		**11-201**		**11-210**	**12-2**
No. of Contacts	19	2	4	2	8	10	2
Contact Size	#23	#16	#23	#20	#23	#20HD	#12
DWV Voltage (VAC)	750	1800	750	1000	750	1000	1800
Current Rating (Amps)	5	13	5	7.5	5	7.5	23

2M801 2M803 2M804	**10-5**	**10-201**		**10-202***		**10-200***	
2M805	**12-5**	**12-201**		**12-202***		**12-200***	
No. of Contacts	5	2	4	2	8	1	12
Contact Size	#16	#12	#23	#16	#23	#12	#23
DWV Voltage (VAC)	1800	1800	750	1800	750	1800	750
Current Rating (Amps)	13	23	5	13	5	23	5

2M Series Technical Information

Insert Arrangements

Front face of pin inserts illustrated (Socket Reversed)

CONTACT LEGEND 12 16 20 20HD 20 23

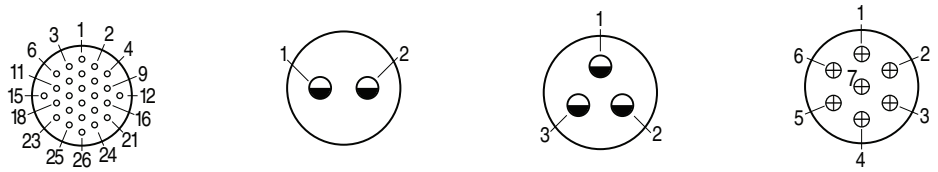

2M801	**10-26**	**13-2**	**13-3***	**13-7**
2M803 2M804	**10-26**	**12-2**	**12-3***	**12-7**
2M805	**12-26**	**15-2**	**15-3***	**15-7**
No. of Contacts	26	2	3	7
Contact Size	#23	#12	#12	#16
DWV Voltage (VAC)	750	1800	1800	1800
Current Rating (Amps)	5	23	23	13

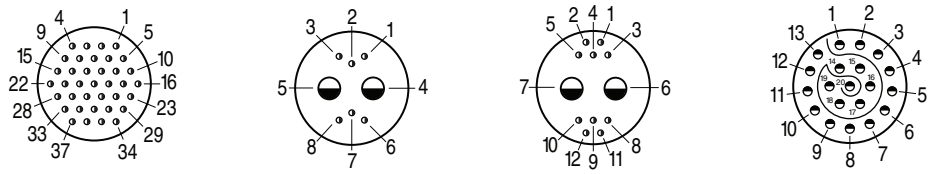

2M801	**13-37**	**13-200***		**13-201**		**13-220**
2M803 2M804	**12-37**	**12-200**		**12-201**		**12-220**
2M805	**15-37**	**15-200***		**15-201**		**15-220**
No. of Contacts	37	2	6	2	10	20
Contact Size	#23	#12	#23	#12	#23	#20HD
DWV Voltage (VAC)	750	1800	750	1800	750	1000
Current Rating (Amps)	5	23	5	23	5	7.5

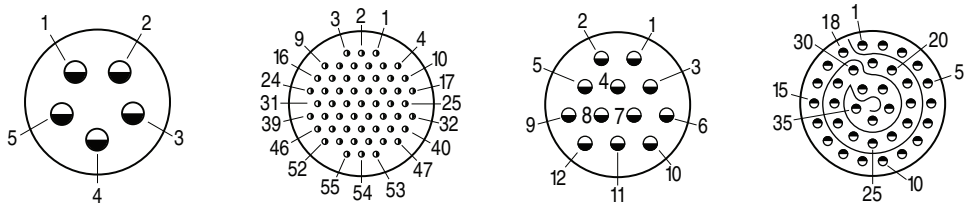

2M801	**16-5**	**16-55**	**16-12**	**16-235**
2M803 2M804	**14-5**	**14-55**	**14-12**	**14-235**
2M805	**18-5**	**18-55**	**18-12**	**18-235**
No. of Contacts	5	55	12	35
Contact Size	#12	#23	#16	#20HD
DWV Voltage (VAC)	1800	750	1800	1000
Current Rating (Amps)	23	5	13	7.5

*Not tooled for every insert pattern

2M Series Technical Reference

Insert Arrangements

Micro38999

Front face of pin inserts illustrated (Socket Reversed)

CONTACT LEGEND 12 16 20 20HD 20 23

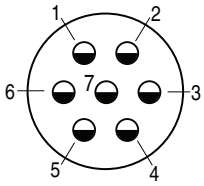

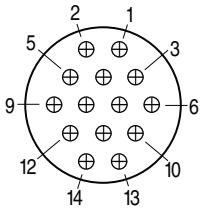

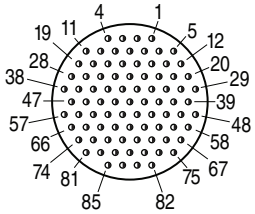

2M801	**17-7**	**17-14***	**17-85**
2M803 2M804	**15-7**	**15-14**	**15-85**
2M805	**19-7**	**19-14***	**19-85**
No. of Contacts	7	14	85
Contact Size	#12	#16	#23
DWV Voltage (VAC)	1800	1800	750
Current Rating (Amps)	23	13	5

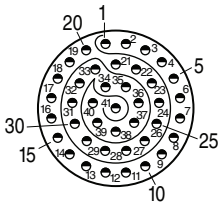

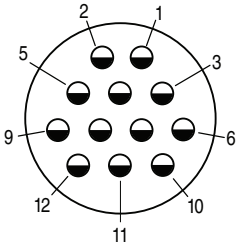

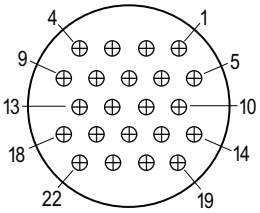

2M801	**17-241***	**21-12**	**21-22***
2M805	**19-241***	**23-12**	**23-22***
No. of Contacts	41	12	22
Contact Size	#20HD	#12	#16
DWV Voltage (VAC)	1000	1800	1800
Current Rating (Amps)	7.5	23	13

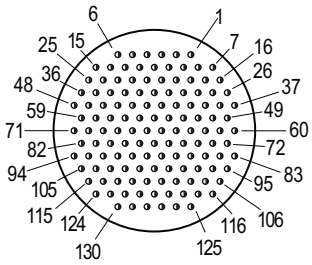

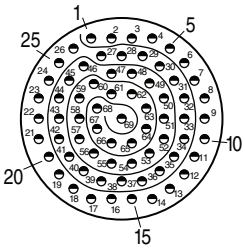

2M801	**21-130**	**21-269**
2M805	**23-130**	**23-269**
No. of Contacts	130	69
Contact Size	#23	#20HD
DWV Voltage (VAC)	750	1000
Current Rating (Amps)	5	7.5

*Not tooled for every insert pattern

2M Series Technical Information

Straight PCB Footprints

INSERT ARRANGEMENT	PIN CONNECTOR	SOCKET CONNECTOR
5-3 (3) #23 Contacts .022 Max. Dia Tall	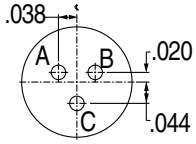	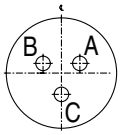
6-23, 8-23 (3) #20HD Contacts .023 Max. Dia. Tail	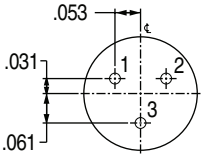	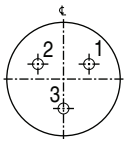
6-4, 8-4 (4) #23 Contacts .022 Max. Dia Tail	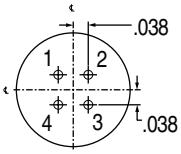	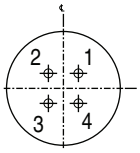
6-6, 8-6 (6) #23 Contacts .022 Max. Dia. Tail	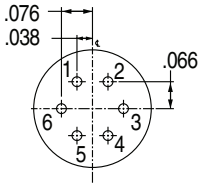	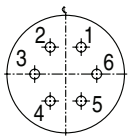
6-7, 8-7 (7) #23 Contacts .022 Max. Dia. Tail	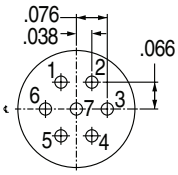	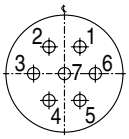
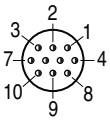 7-10, 9-10 10 #23 Contacts .022 Max. Dia. Tail	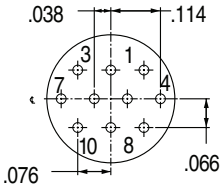	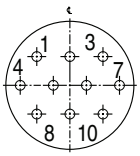

Socket inserts are a mirror image of pin side. Socket side shown for cavity locations only, reference pin side for dimensions.

2M Series Technical Reference

Straight PCB Footprints

INSERT ARRANGEMENT	PIN CONNECTOR	SOCKET CONNECTOR
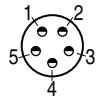 7-25, 9-25 (5) #20HD Contacts .028 Max. Dia Tall	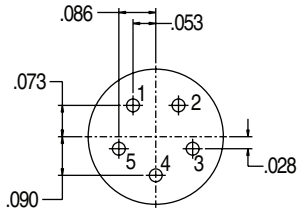	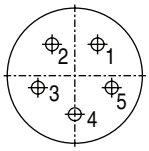
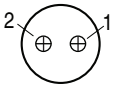 8-2, 10-2 (2) #16 Contacts	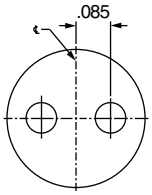	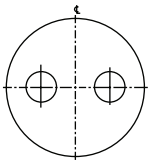
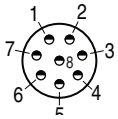 8-28, 10-28 (8) #20HD Contacts	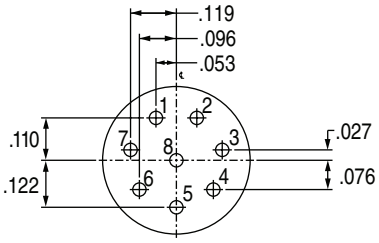	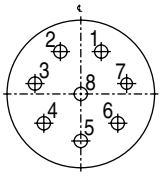
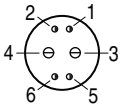 8-200*, 10-200* (2) #20 Contacts (4) #23 Contacts	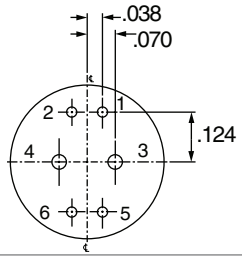	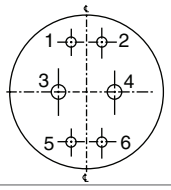
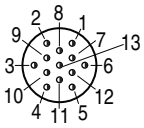 8-13, 10-13 (13) #23 Contacts .022 Max. Dia. Tail	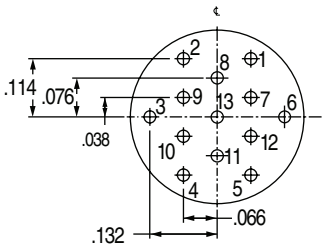	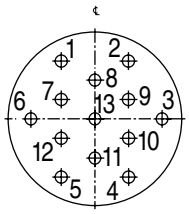
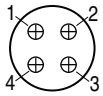 9-4, 11-4 (4) #16 Contacts	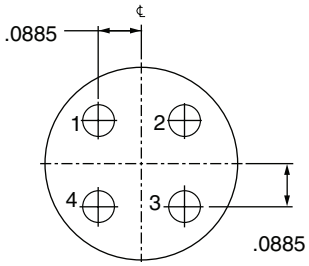	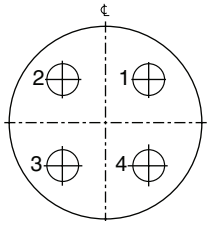

*Not tooled for every insert pattern

2M Series Technical Information

Straight PCB Footprints

INSERT ARRANGEMENT	PIN CONNECTOR	SOCKET CONNECTOR
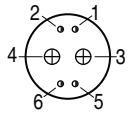 9-200, 11-200 (4) #23 Contacts (2) #16 Contacts	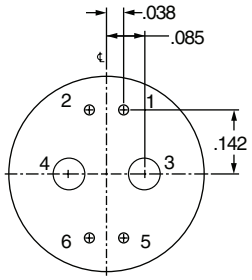	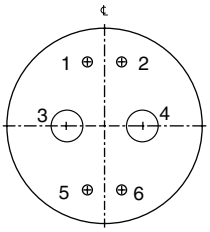
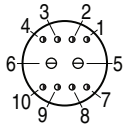 9-201, 11-201 (2) #20 Contacts (8) #23 Contacts	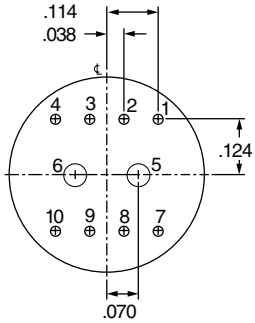	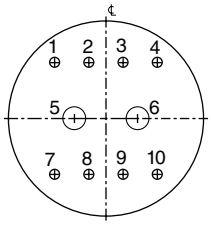
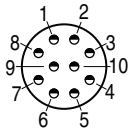 9-210*, 11-210* (10) #20HD Contacts	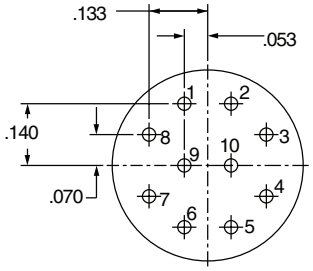	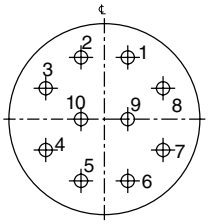
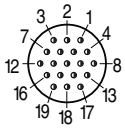 9-19, 11-19 (19) #23 Contacts .022 Max. Dia Tail	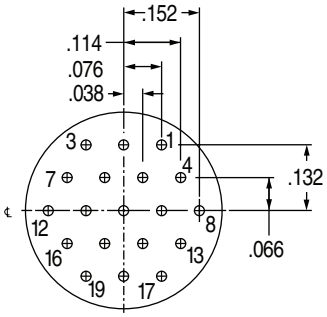	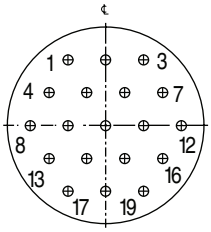
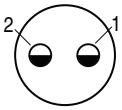 10-2, 12-2 (2) #12 Contacts	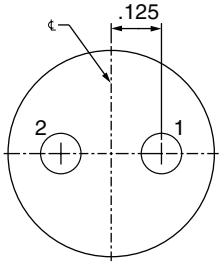	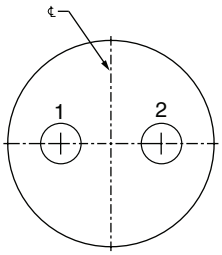

*Not tooled for every insert pattern

2M Series Technical Reference

Straight PCB Footprints

INSERT ARRANGEMENT	PIN CONNECTOR	SOCKET CONNECTOR
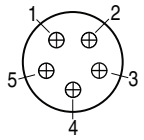 10-5, 12-5 (5) #16 Contacts	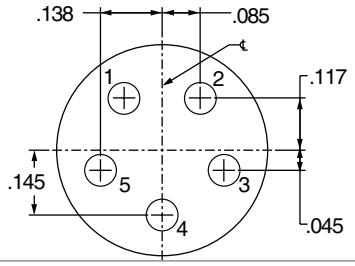	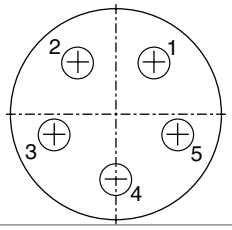
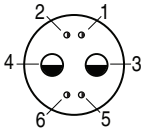 10-201, 12-201 (2) #12 Contacts (4) #23 Contacts	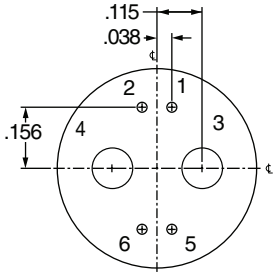	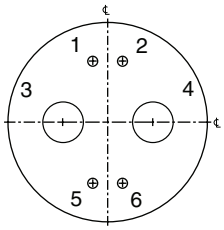
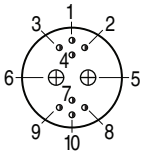 10-202*, 12-202* (2) #16 Contacts (8) #23 Contacts	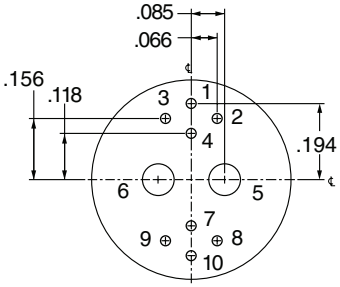	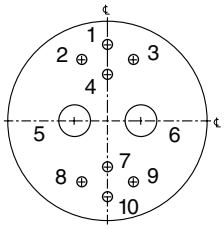
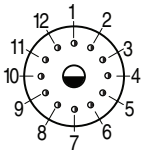 10-200*, 12-200* (1) #12 Contact (12) #23 Contacts	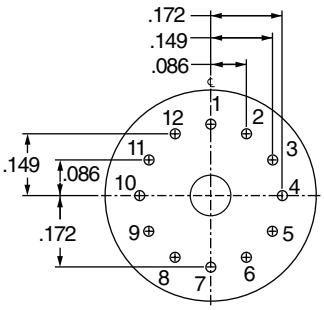	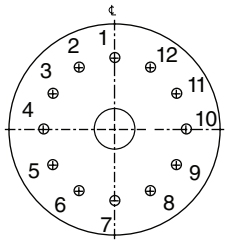
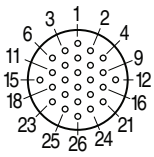 10-26, 12-26 (26) #23 Contacts .022 Max. Dia. Tail	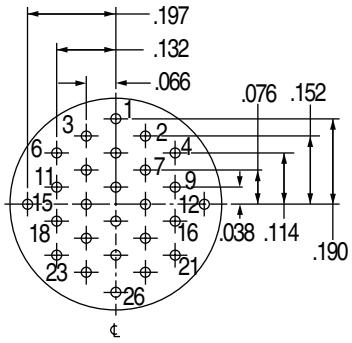	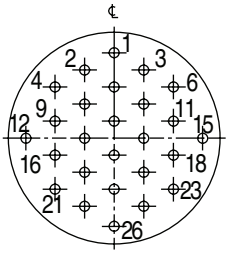

*Not tooled for every insert pattern

2M Series Technical Information

Straight PCB Footprints

INSERT ARRANGEMENT	PIN CONNECTOR	SOCKET CONNECTOR
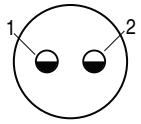 12-2, 13-2, 15-2 (2) #12 Contacts	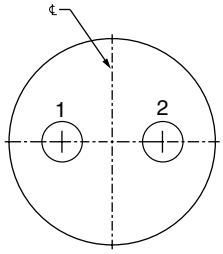	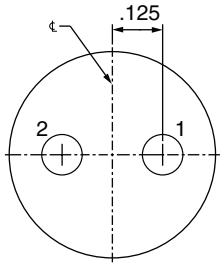
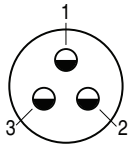 12-3*, 13-3*, 15-3* (3) #12 Contacts	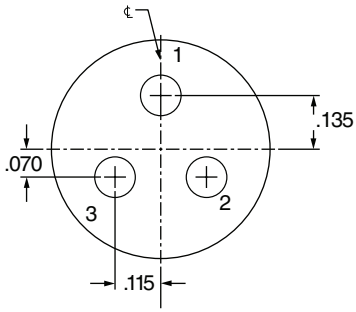	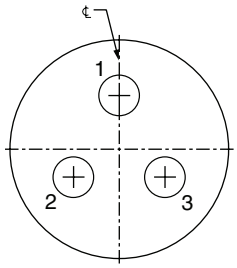
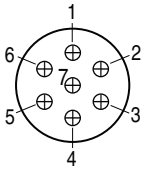 12-7, 13-7, 15-7 (7) #16 Contacts	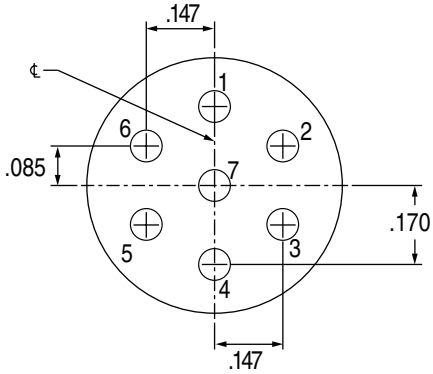	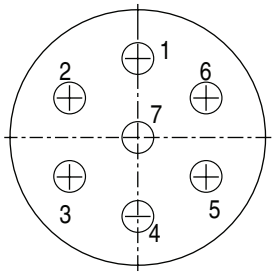
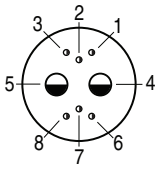 12-200*, 13-200*, 15-200* (2) #12 Contacts (6) #23 Contacts	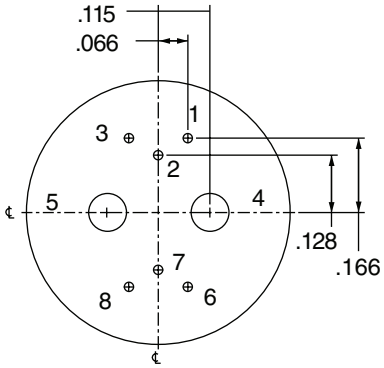	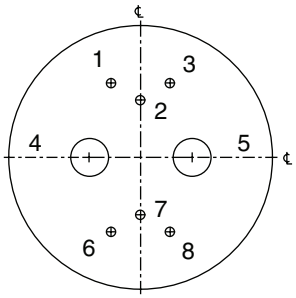

*Not tooled for every insert pattern

2M Series Technical Reference

Straight PCB Footprints

INSERT ARRANGEMENT	PIN CONNECTOR	SOCKET CONNECTOR
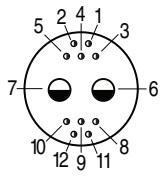 12-201, 13-201, 15-201 (2) #12 Contacts (10) #23 Contacts	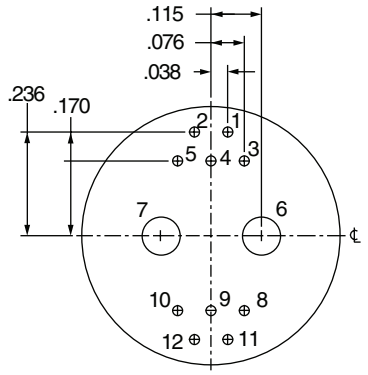	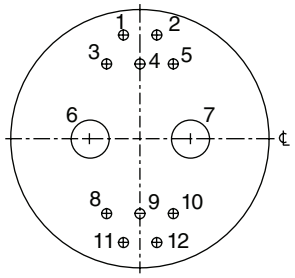
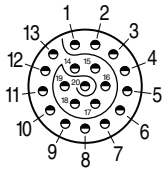 12-220, 13-220, 15-220 (20) #20HD Contacts	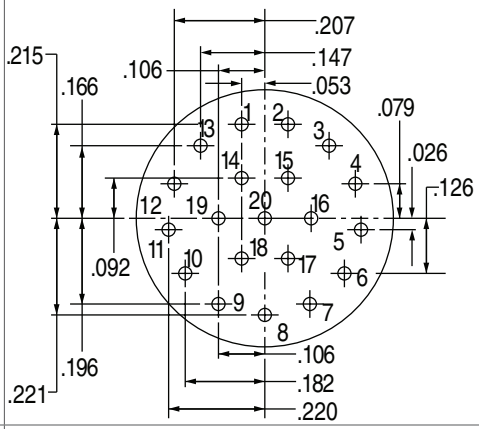	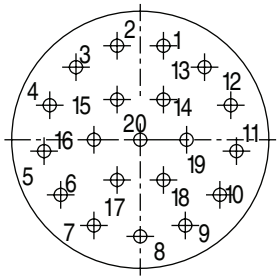
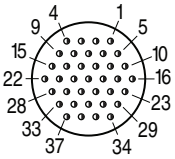 12-37, 13-37, 15-37 (37) #23 Contacts .022 Max. Dia. Tail	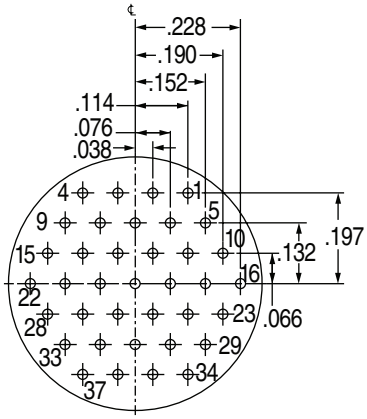	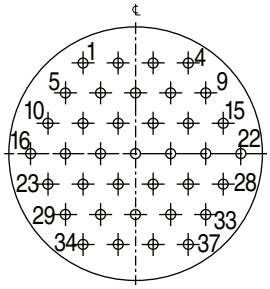
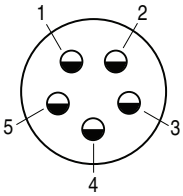 14-5, 16-5, 18-5 (5) #12 Contacts	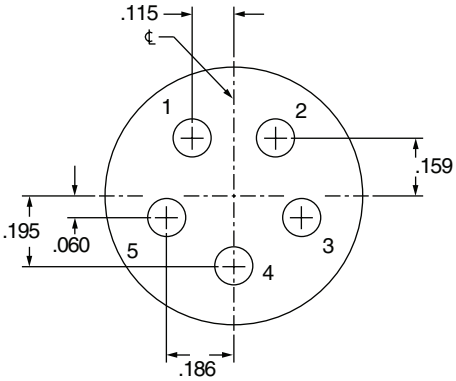	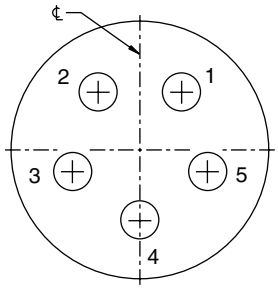

2M Series Technical Information

Straight PCB Footprints

INSERT ARRANGEMENT	PIN CONNECTOR	SOCKET CONNECTOR
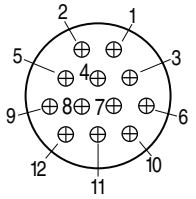 14-12, 16-12, 18-12 (12) #16 Contacts	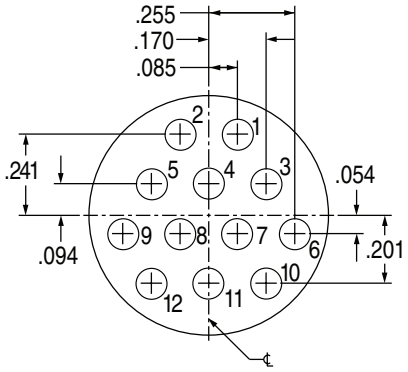	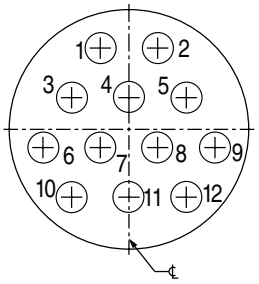
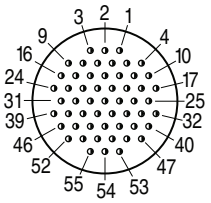 14-55, 16-55, 18-55 (55) #23 Contacts .022 Max. Dia. Tail	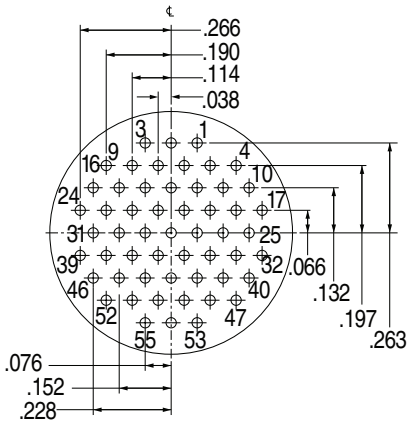	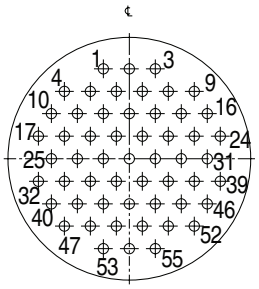
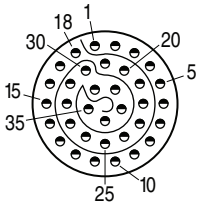 14-235, 16-235, 18-235 (35) #20HD Contacts .023 Max. Dia. Tail	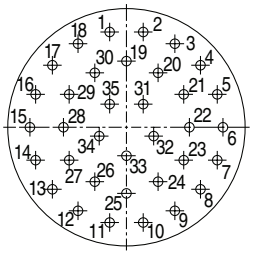	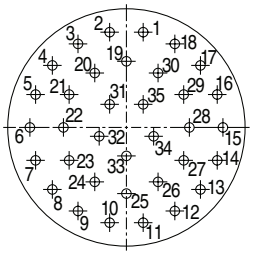

14-235, 16-235, 18-235

Pin. No.	X in.	X mm.	Y in.	Y mm.	Pin. No.	X in.	X mm.	Y in.	Y mm.	Pin. No.	X in.	X mm.	Y in.	Y mm.
1	-.053	-1.35	.301	7.65	13	-.234	-5.94	-.196	-4.98	25	.000	0.00	-.209	-5.31
2	.053	1.35	.301	7.65	14	-.287	-7.29	-.104	-2.64	26	-.100	-2.54	-.172	-4.37
3	.153	3.89	.264	6.71	15	-.305	-7.75	.000	0.00	27	-.181	-4.60	-.104	-2.64
4	.234	5.94	.196	4.98	16	-.287	7.29	.104	2.64	28	-.199	-5.05	.000	0.00
5	.287	7.29	.104	2.64	17	-.234	-5.94	.196	4.98	29	-.181	-4.60	.104	2.64
6	.305	7.75	.000	0.00	18	-.153	-3.89	.264	6.71	30	-.100	-2.54	.172	4.37
7	.287	7.29	-.104	-2.64	19	.000	0.00	.209	5.31	31	-.053	-1.35	.073	1.85
8	.234	5.94	-.196	-4.98	20	.100	2.54	.172	4.37	32	.053	1.35	.073	1.85
9	.153	3.89	-.264	-6.71	21	.181	4.60	.104	2.64	33	.086	2.18	-.028	-0.71
10	.053	1.35	-.301	-7.65	22	.199	5.05	.000	0.00	34	.000	0.00	-.090	-2.29
11	-.053	-1.35	-.301	-7.65	23	.181	4.60	-.104	-2.64	35	-.086	-2.18	-.028	-0.71
12	-.153	-3.89	-.264	-6.71	24	.100	2.54	-.172	-4.37					

2M Series Technical Reference

Straight PCB Footprints

INSERT ARRANGEMENT	PIN CONNECTOR	SOCKET CONNECTOR
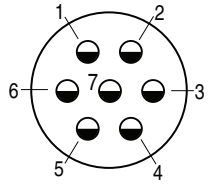 15-7, 17-7, 19-7 (7) #12 Contacts	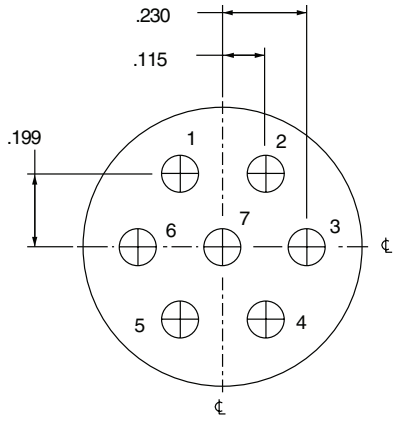	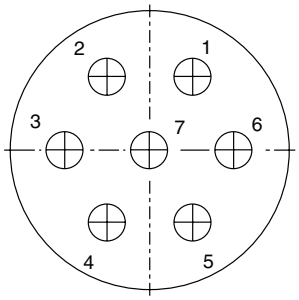
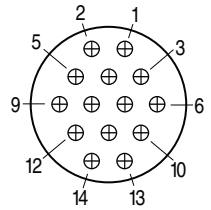 15-14, 17-14, 19-14 (14) #16 Contacts	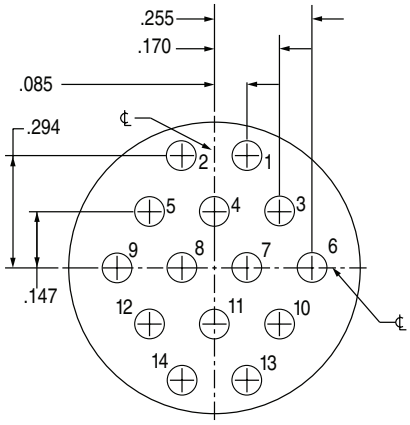	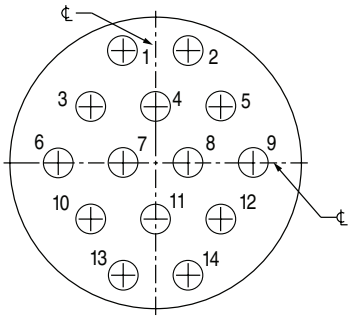
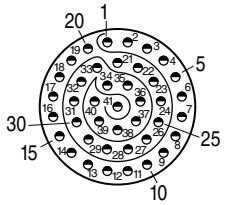 17-241, 19-241 (41) #20HD Contacts .028 Max. Dia. Tail	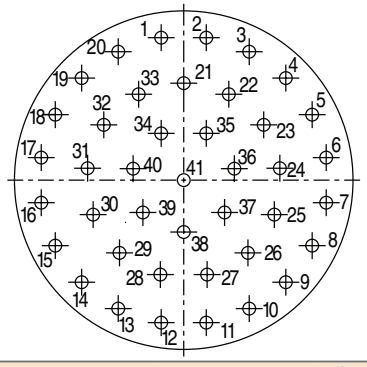	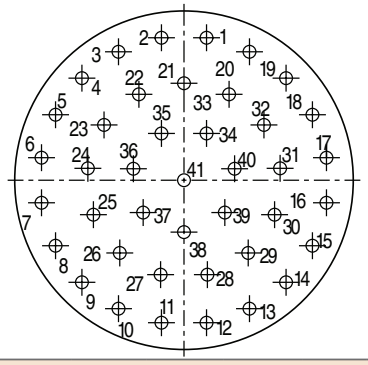

17-241, 19-241

Pin. No.	X in.	X mm.	Y in.	Y mm.	Pin. No.	X in.	X mm.	Y in.	Y mm.	Pin. No.	X in.	X mm.	Y in.	Y mm.
1	-.053	-1.35	.335	8.51	15	-.302	-7.67	-.154	-3.91	29	-.151	-3.84	-.171	-4.34
2	.053	1.35	.335	8.51	16	-.335	-8.51	-.053	-1.35	30	-.213	-5.41	-.081	-2.06
3	.154	391	.302	7.67	17	-.335	-8.51	.053	1.35	31	-.226	-5.74	.028	0.71
4	.240	6.10	.240	6.10	18	-.302	-7.67	.154	3.91	32	-.188	-4.78	.130	3.30
5	.302	7.67	.154	3.91	19	-.240	-6.10	.240	6.10	33	-.106	-2.69	.202	5.13
6	.335	8.51	.053	1.35	20	-.154	-3.91	.302	7.67	34	-.053	-1.35	.110	2.79
7	.335	8.51	-.053	-1.35	21	.000	0.00	.228	5.79	35	.053	1.35	.110	2.79
8	.302	7.67	-.154	-3.91	22	.106	2.69	.202	5.13	36	.119	3.02	.027	0.69
9	.240	6.10	-.240	-6.10	23	.188	4.78	.130	3.30	37	.096	2.44	-.076	-1.93
10	.154	3.91	-.302	-7.67	24	.226	5.74	.028	0.71	38	.000	0.00	-.122	-3.10
11	+ .053	+1.35	-.335	-8.51	25	.213	5.41	-.081	-2.06	39	-.096	-2.44	-.076	-1.93
12	-.053	-1.35	-.335	-6.51	26	.151	3.84	-.171	-4.34	40	-.119	-3.02	.027	0.69
13	-.154	-3.91	-.302	-7.67	27	.055	1.40	-.222	-5.64	41	.000	0.00	.000	0.00
14	-.240	-6.10	-.240	-6.10	28	-.055	-1.40	-.222	-5.64					

2M Series Technical Information

Straight PCB Footprints

INSERT ARRANGEMENT	PIN CONNECTOR	SOCKET CONNECTOR
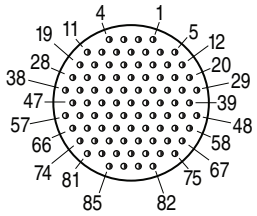 17-85, 19-85 (85) #23 Contacts .022 Max. Dia. Tail	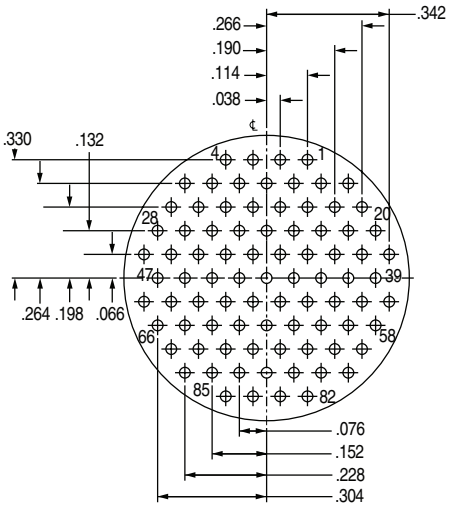	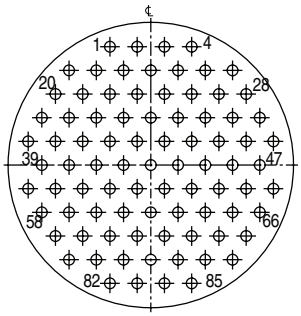
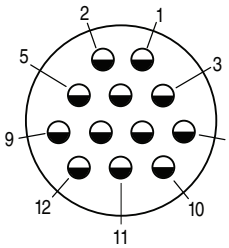 21-12, 23-12 (12) #12 Contacts	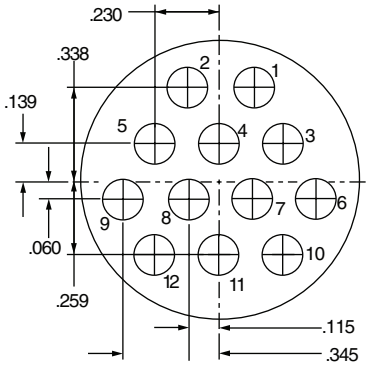	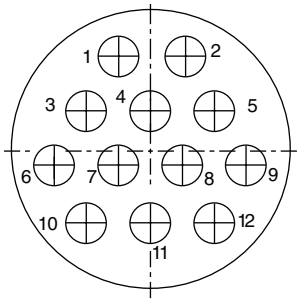
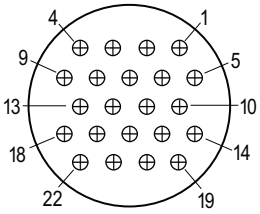 21-22*, 23-22* (22) #16 Contacts	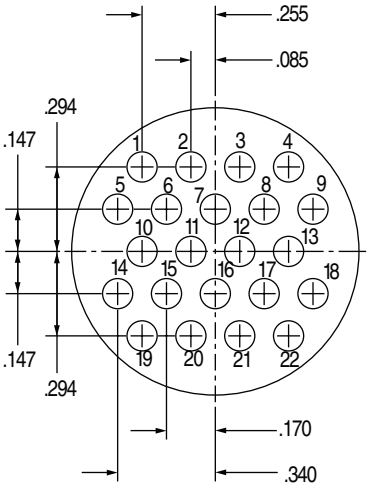	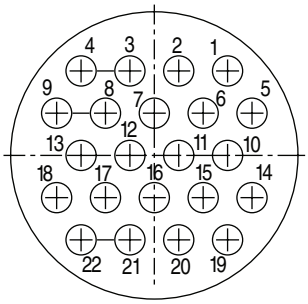

*Not tooled for every insert pattern

Straight PCB Footprints

Micro38999

INSERT ARRANGEMENT	PIN CONNECTOR	SOCKET CONNECTOR
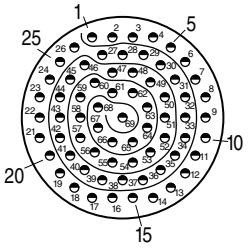 21-269, 23-269 (69) #20HD Contacts .028 Max. Dia. Tail	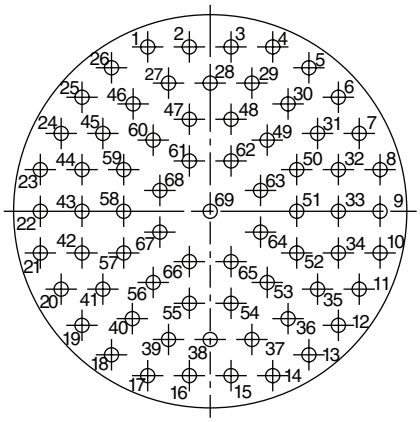	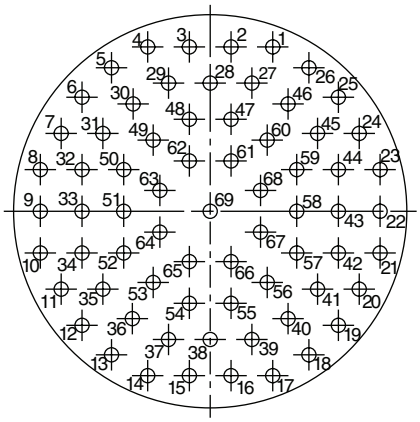

21-269, 23-269														
Pin. No.	X		Y		Pin. No.	X		Y		Pin. No.	X		Y	
	in.	mm.	in.	mm.		in.	mm.	in.	mm.		in.	mm.	in.	mm.
1	-.159	-4.04	.418	10.62	24	-.379	-9.63	.198	5.03	47	-.053	-1.35	.234	5.94
2	-.053	-1.35	.418	10.62	25	-.326	-8.28	.290	7.37	48	.053	1.35	.234	5.94
3	.053	1.35	.418	10.62	26	-.251	-6.38	.365	9.27	49	.145	3.68	.181	4.60
4	.159	4.04	.418	10.62	27	-.106	-2.69	.326	8.28	50	.220	5.59	.106	2.69
5	.251	6.38	.365	9.27	28	.000	0.00	.326	8.28	51	.220	5.59	.000	0.00
6	.326	8.28	.290	7.37	29	.106	-2.69	.326	8.28	52	.220	5.59	-.106	-2.69
7	.379	9.63	.198	5.03	30	.198	5.03	.273	6.93	53	.145	3.68	-.181	-4.60
8	.432	10.97	.106	2.69	31	.273	6.93	.198	5.03	54	.053	1.35	-.234	-5.94
9	.432	10.97	.000	0.00	32	.326	8.28	.106	2.69	55	-.053	-1.35	-.234	-5.94
10	.432	10.97	-.106	-2.69	33	.326	8.28	.000	0.00	56	-.145	-3.68	-.181	-4.60
11	.379	9.63	-.198	-5.03	34	.326	8.28	-.106	-2.69	57	-.220	-5.59	-.106	-2.69
12	.326	8.28	-.290	-7.37	35	.273	6.93	-.198	-5.03	58	-.220	-5.59	.000	0.00
13	.251	6.38	-.365	-9.27	36	.198	5.03	-.273	-6.93	59	-.220	-5.59	.106	2.69
14	.159	4.04	-.418	-10.62	37	.106	2.69	-.326	-8.28	60	-.145	-3.68	.181	4.60
15	.053	1.35	-.418	-10.62	38	.000	0.00	-.326	-8.28	61	-.053	-1.35	.128	3.25
16	-.053	-1.35	-.418	-10.62	39	-.106	-2.69	-.326	-8.28	62	.053	1.35	.128	3.25
17	-.159	-4.04	-.418	-10.62	40	-.198	-5.03	-.273	-6.93	63	.128	3.25	.053	1.35
18	-.251	-6.38	-.365	-9.27	41	-.273	-6.93	-.198	-5.03	64	.128	3.25	-.053	-1.35
19	-.326	-8.28	-.290	-7.37	42	-.326	-8.28	-.106	-2.69	65	.053	1.35	-.128	-3.25
20	-.379	-9.63	-.198	-5.03	43	-.326	-8.28	.000	0.00	66	-.053	-1.35	-.128	-3.25
21	-.432	-10.97	-.106	-2.69	44	-.326	-8.28	.106	2.69	67	-.128	-3.25	-.053	-1.35
22	.432	-10.97	.000	0.00	45	-.273	-6.93	.198	5.03	68	-.128	-3.25	.053	1.35
23	-.432	-10.97	.106	2.69	46	-.198	-5.03	.273	6.93	69	.000	0.00	.000	0.00

2M Series Technical Information

Straight PCB Footprints

INSERT ARRANGEMENT

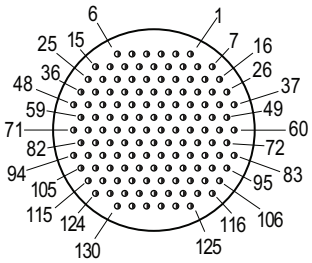

21-130, 23-130
(130) #23 Contacts
.022 Max. Dia Tail

PIN CONNECTOR

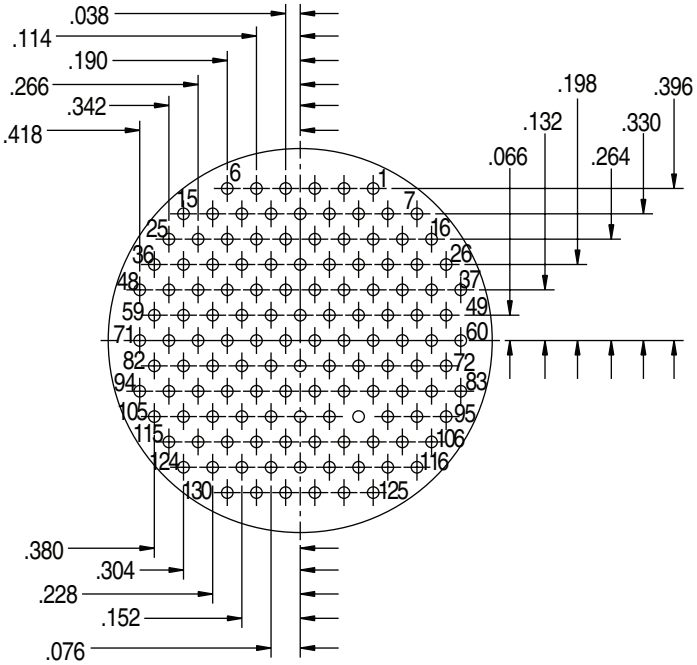

SOCKET CONNECTOR

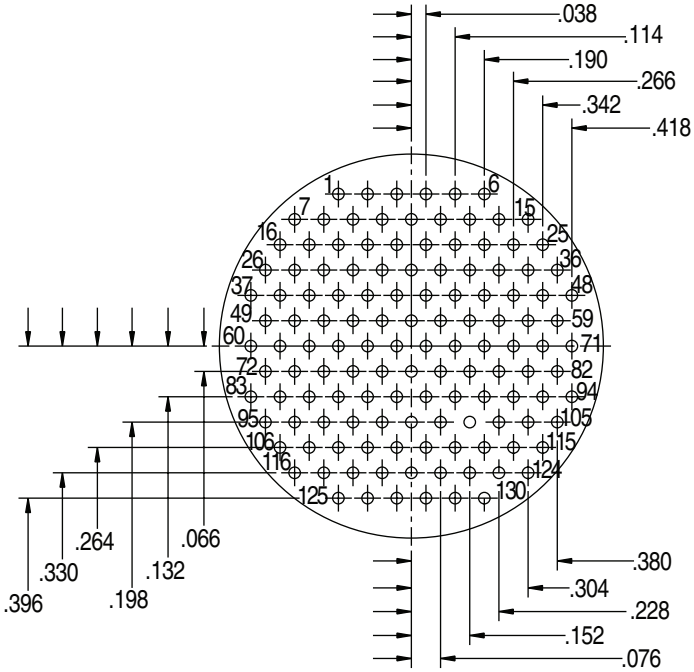

2M Series Performance Specifications

Materials and Finishes

Micro38999

PERFORMANCE SPECIFICATIONS	
Current Rating (Maximum)	Size #23 contact: 5 AMPS. Size #20 contact: 7.5 AMPS. Size #16 contact: 13 AMPS. Size #12 contact: 23 AMPS.
Test Voltage (Dielectric Withstanding Voltage) Mated Connectors	Size #23 contacts: 750 VAC RMS sea level, 400 VAC RMS 40,000 feet Size #20 contacts: 1000 VAC RMS sea level, 400 VAC RMS 40,000 feet Size #20HD contacts: 1000 VAC RMS sea level, 400 VAC RMS 40,000 feet Size #16 contacts: 1800 VAC RMS sea level, 1000 VAC RMS 40,000 feet Size #12 contacts: 1800 VAC RMS sea level, 1000 VAC RMS 40,000 feet
Insulation Resistance	5000 megohms minimum
Contact Resistance	Size #23 contact: 73 millivolt drop at 5 AMPS. test current Size #20 contact: 55 millivolt drop at 7.5 AMPS. test current Size #16 contact: 49 millivolt drop at 13 AMPS. test current Size #12 contact: 42 millivolt drop at 23 AMPS. test current
Operating Temperature	-65° C. to +175° C.
Immersion, Mated	1 meter water immersion for 1 hour (2M803 Series splash proof only)
Magnetic Permeability	2.0 μ maximum

MATERIALS AND FINISHES	
Aluminum Shell, Barrel, and Coupling Nut	Aluminum alloy 6061 T6
Stainless Steel Shell, Barrel Coupling Nut	Passivated Stainless Steel, 200° C
Front and Rear Inserts	Polyphenylene Sulfide (PPS)
Contact Retention Clip	Beryllium copper, heat-treated
Grommet, Peripheral Seal and Interfacial Seal	Fluorosilicone Rubber
Contacts	Gold Plated Copper alloy
Socket Contact Hood	Passivated Stainless steel
Adhesives	Various Epoxies & RTV's
Potting Compound, PCB and Solder Cup Versions	High Strength Epoxy

Please refer to the comprehensive 2M Series Product Specification for additional parameters and test methods.
Filter and Hermetic designs have different specifications. (Please refer to individual sections)

2M Series Performance Specifications

Complete Product Specifications

DESCRIPTION	REQUIREMENT	PROCEDURE
	ELECTRICAL	
Contact resistance	SAE AS39029 Table V Wire Size / Test Current / Max Voltage Drop 12 / 23 / 42 14 / 17 / 40 16 / 13 / 49 20 / 7.5 / 55 22 / 5 / 73 24 / 3 / 45 26 / 2 / 52 28 / 1.5 / 54	EIA-364-06 Test current in amperes. Voltage drop in millivolts. Silver-coated copper wire, +25°C.
Low level contact resistance	Wire Size / Max. Milliohms 16 / 5 20 / 9 22 / 15 24 / 20 26 / 31 28 / 50	EIA-364-23 100 milliamperes maximum and 20 millivolts maximum open circuit voltage
Insulation resistance	5000 megohms minimum	EIA-364-21 500 volts DC ± 50 volts. Test between adjacent contacts and contacts to shell.
Dielectric withstanding voltage, sea level	No breakdown or flashover #23 contacts 750 volts #20HD contacts 750 volts #16 contacts 1800 volts #12 contacts 1800 volts	EIA-364-20 AC RMS 60 Hz. One minute dwell. Unmated or mated
Dielectric withstanding voltage, 40,000 feet altitude	No breakdown or flashover #23 contacts 100 volts #20HD contacts 150 volts #16 contacts 1000 volts #12 contacts 1000 volts	EIA-364-20 AC RMS 60 Hz. One minute dwell. mated condition
Current carrying capacity	Contact Size / Max Current 12 / 23 16 / 13 20 / 7.5 23 / 5	EIA-364-70 Method 1

Please refer to the comprehensive 2M Series Product Specification for additional parameters and test methods.
Filter and Hermetic designs have different specifications. (Please refer to individual sections)

2M Series Performance Specifications

Complete Product Specifications

Micro38999

DESCRIPTION	REQUIREMENT	PROCEDURE
Shell-to-shell conductivity, Initial	The maximum voltage drop across a mated pair shall not exceed the values shown. Series — Voltage Drop 2M801 — 2.5 2M803 — 100 2M804 — 2 2M805 — 2	EIA-364-83 Electroless Nickel Plated Connectors
Shell-to-shell conductivity, after conditioning (48 hours salt spray)	The maximum voltage drop across a mated pair shall not exceed the values shown. Series — Voltage Drop 2M801 — 2.5 2M803 — 200 2M804 — 4 2M805 — 2	EIA-364-83 Electroless Nickel Plated Connectors
Shielding effectiveness, low frequency (100MHz-1000 MHz)		EIA-364-21 Electroless Nickel Plated Connectors

	dB Min. Attenuation		
Frequency	**Series 2M801**	**Series 2M803**	**Series 2M804, 2M805**
100 MHz	75	60	90
200 MHz	70	55	88
300 MHz	65	55	88
400 MHz	63	50	87
800 MHz	58	45	85
1000 MHz	55	40	85

Shielding effectiveness, high frequency (1GHz-10GHz)		EIA-364-66 Electroless Nickel Plated Connectors

	dB Min. Attenuation	
Frequency	**Series 2M801, 2M804**	**Series 2M805**
1 GHz	55	85
3 GHz	50	69
5 GHz	45	66
19 GHz	40	65

Please refer to the comprehensive 2M Series Product Specification for additional parameters and test methods.
Filter and Hermetic designs have different specifications. (Please refer to individual sections)

2M Series Performance Specifications

Complete Product Specifications

DESCRIPTION	REQUIREMENT	PROCEDURE
	MECHANICAL	
Vibration, Sine	No discontinuity of greater than 1 microsecond, no cracking, breaking or loosening of parts, plug shall not become disengaged from receptacle. Connectors shall meet electrical requirements after vibration test.	MIL-STD-202 Method 204, test Condition G 12 sweep cycles per axes, 20 min. per 10-2000-10Hz @ temp. 2M801/2M805 - 60 g 2M803/2M804 - 30 g
Vibration, Random	No discontinuity of greater than 1 microsecond, no cracking, breaking or loosening of parts, plug shall not become disengaged from receptacle. Connectors shall meet electrical requirements after vibration test.	EIA-364-28 Test Condition V Letter I 100 milliamp test current 50- 2,000 Hz @ temp. 2M801/2M805 - 43.9 g RMS 2M803/2M804 - 37.80 g RMS
Gunfire Vibration	No discontinuity of greater than 1 microsecond, no cracking, breaking or loosening of parts, plug shall not become disengaged from receptacle. Connectors shall meet electrical requirements after vibration test.	MIL-STD-810F Method 519.5
Mechanical Shock	No discontinuity of greater than 1 microsecond, no cracking, breaking or loosening of parts, plug shall not become disengaged from receptacle. Connectors shall meet electrical requirements after shock test.	EIA-364-27 Condition D 300 G, halfsine, 3ms, 3 axes
Mechanical durability, at ambient temperature	No deterioration which will adversely affect the connector after 2000 cycles (where applicable) of mating and unmating. Connectors shall meet contact resistance, insulation resistance, shell-to-shell resistance, DWV, and mating and unmating force.	EIA-364-09
Solderability, PC tail contacts	95% solder coverage. Smooth, bright and even finish.	EIA-364-52 Category 3 8 hours steam aging prior to test 245° C, 4-5 sec. dwell 10X magnification
Resistance To Soldering Heat	No damage to connector. Connectors shall meet insulation resistance and waterproof sealing requirements.	EIA-364-56 260° C, 10 seconds (PC tail)

Please refer to the comprehensive 2M Series Product Specification for additional parameters and test methods.
Filter and Hermetic designs have different specifications. (Please refer to individual sections)

2M Series Performance Specifications

Complete Product Specifications

Micro38999

DESCRIPTION	REQUIREMENT	PROCEDURE
Impact	No impairment of function. Connector shall meet contact resistance, insulation resistance and waterproof sealing.	EIA-364-42 1 meter 8 drops
Contact retention	Contact Size / Min. Pounds / Min. Newtons 23 / 10 / 45 20 / 15 / 67 20HD / 10 / 45 16 / 25 / 111 12 / 25 / 111	EIA-364-29
Contact separation force	Contact Size / Min. Ounces / Min. Newtons 23 / 0.5 / 0.14 20 / 0.7 / 0.19 16 / 2.0 / 0.56 12 / 3.0 / 0.83	SAE AS39029
Coupling torque	Threaded coupling connector coupling torque shall not exceed the following requirements.	

Shell Size		
Series 2M801	**Series 2M805**	**Inch Pounds**
5	-	20
6	8	22
7	9	24
8	10	26
9	11	28
10 & 11	12 & 13	30
12 & 13	15	36
14 & 16	18	42
15 & 17	19 & 21	44
19 & 21	23	52

Unmating force (Series 2M804)

Series 2M804 push/pull connectors

Contact Arrangement	Pounds
5-3	10.6
6-4	10.8
6-7	11.4
7-10	12.0
8-13	12.6
9-19	13.8
10-26	15.2
12-37	17.4
14-55	21.0

Please refer to the comprehensive 2M Series Product Specification for additional parameters and test methods. Filter and Hermetic designs have different specifications. (Please refer to individual sections)

2M Series Performance Specifications

Complete Product Specifications

<table>
<tr><th>DESCRIPTION</th><th>REQUIREMENT</th><th>PROCEDURE</th></tr>
<tr><td>Insert retention</td><td>No impairment of function. Connector shall meet contact resistance, insulation resistance and waterproof sealing.
<table>
<tr><th colspan="3">Shell Size</th><th></th></tr>
<tr><th>Series 2M803, 2M804</th><th>Series 2M801</th><th>Series 2M805</th><th>Min. Force in Pounds</th></tr>
<tr><td>5</td><td>5</td><td></td><td>100</td></tr>
<tr><td>6</td><td>6</td><td>8</td><td>100</td></tr>
<tr><td>7</td><td>7</td><td>9</td><td>100</td></tr>
<tr><td>8</td><td>8</td><td>10</td><td>100</td></tr>
<tr><td>9</td><td>9</td><td>11</td><td>100</td></tr>
<tr><td>10</td><td>10</td><td>12</td><td>100</td></tr>
<tr><td>12</td><td>13</td><td>15</td><td>100</td></tr>
<tr><td>14</td><td>16</td><td>18</td><td>100</td></tr>
<tr><td>15</td><td>17</td><td>19</td><td>100</td></tr>
<tr><td></td><td>21</td><td>23</td><td>100</td></tr>
</table></td><td>EIA-365-35</td></tr>
<tr><td>Magnetic Permeability</td><td>2 μ maximum.</td><td>EIA-364-54</td></tr>
<tr><td colspan="3">ENVIRONMENTAL</td></tr>
<tr><td>Operating temperature</td><td>-65° to +175°C</td><td></td></tr>
<tr><td>Water immersion, mated</td><td>No evidence of water penetration into mated connectors. ≥100Ω insulation resistance.</td><td>MIL-STD-810F Method 512.4
1 meter immersion
1 hour</td></tr>
<tr><td>Water immersion, open face panel mount receptacles with non-removable printed circuit board or solder cup contacts</td><td>Connectors with waterblock potting process.

1 X 10^{-4} cc/second maximum helium leak rate at 1 atmosphere pressure differential following thermal shock conditioning.</td><td>EIA-365-02
3 cycles thermal shock
-57°C to +71°C
75 min. dwell
5 minute transfer rate</td></tr>
<tr><td>Humidity, cyclic (damp heat, cyclic) (moisture resistance)</td><td>No deterioration which will adversely affect the connector. 100 megohms minimum insulation resistance during the final cycle. Following the recovery period, connectors shall meet contact resistance, shell-to-shell resistance and DWV requirements.</td><td>EIA-364-31 Condition B Method III
80-98% RH
10 cycles (10 days)
+25° C to +65° C
Step 7b vibration deleted.
24 hour recovery period.</td></tr>
</table>

Please refer to the comprehensive 2M Series Product Specification for additional parameters and test methods.
Filter and Hermetic designs have different specifications. (Please refer to individual sections)

2M Series Performance Specifications

Complete Product Specifications

Micro38999

DESCRIPTION	REQUIREMENT	PROCEDURE
21 day humidity (damp heat, long term)	No deterioration which will adversely affect the connector. Following the drying period, connectors shall meet 100 megohms minimum, contact resistance, shell-to-shell resistance, DWV, mating and unmating requirements.	EIA-364-31 Condition C Method II 90-95% RH 40° C Apply 100 volts DC during test. 4 hours drying time at ambient temperature prior to final measurements.
Thermal shock	No mechanical damage or loosening of parts. Following thermal shock, connector shall meet contact resistance, DWV, insulation resistance and shell-to-shell resistance requirements.	EIA-364-32 Test Condition IV 5 cycles consisting of -65° C 30 minutes, +25° C 5 minutes max., +150° C 30 minutes, +25° C 5 minutes max.
Corrosion (salt mist)	No exposure of base metal. Connectors shall meet DWV and contact resistance requirements following the test.	EIA-364-26 5% salt solution 35° C Unmated connectors Code C: 48 hours Code M: 48 hours Code MT: 500 hours Code NF: 500 hours Code ZNU: 500 hours
Sand and dust	Mated connectors shall withstand the effects of blowing sand and dust	MIL-STD-810F, Method 510.4
Fungus	Connector materials shall be fungus inert.	MIL-STD-810F, Method 508.5
Fluid immersion	No visible damage from immersion in various fuels and oils. Connector shall meet coupling torque and dielectric withstanding voltage requirements.	EIA-364-10 Unmated connectors
Altitude immersion	No evidence of moisture on connector interface or contacts. Connector shall meet dielectric withstanding voltage.	EIA-364-03

Please refer to the comprehensive 2M Series Product Specification for additional parameters and test methods. Filter and Hermetic designs have different specifications. (Please refer to individual sections)

2M805 Tri-Start Threaded Coupling

General Information

Page Guide

Order C29
Weight C30
Plugs C31
In-Line C32
Square Flange C33
Jam Nut C34
PCB/ Sq Flange C35
PCB/Jam Nut C36
PCB Double Flange C37
Protection Cap C38-39

Amphenol's 2M Micro38999 Connector Series… The New Aerospace Standard

Averaging less than half the size and weight of their 38999 ancestors, Amphenol's 2M Micro38999 series are an easy and inexpensive way to take weight out of your system. 2M meet or exceed most environmental and performance requirements listed in MIL-DTL-38999, so modernizing your equipment doesn't mean sacrificing ruggedness. With almost 2,000,000 configurations in every termination style and a full complement of accessories available right out of the catalog, customization has never been easier. Smarter, faster and smaller: Amphenol's 2M… the only connector you'll ever need.

2M805 Features

- Tri-start fast coupling
- Excellent EMI shielding
- Superior vibration resistance
- Waterproof
- Nickel plated ground spring

Why 2M805?

2M805 connectors are the evolution of the mil-standard circular. Designed to meet the same harsh environmental requirements of D38999, they were developed to make scaling-down existing technology easy and risk-free. Your systems are getting smaller, lighter, and faster; so why wouldn't your interconnect do the same? Less than half the size and weight of their 38999 predecessors, you can reduce size, reduce space, and reduce cost… but never reduce your expectations.

2M805 VS 38999

Specification	2M805	MIL-DTL-38999 Series III
Signal Count	1 to 130	1 to 187
Insulation Resistance	5,000 megaohms min	5,000 megaohms min
Operating Temperature	-65°C to +175°C	-65°C to +175°C
Shock	300 G ± 15	300 G ± 15
Vibration	"43.9 G Random 60.0 G Sine"	"43.9 G Random 60.0 G Sine"
Shielding Effectiveness	"85 dB min. from 100 MHz to 1000 MHz"	"65 dB min. from 100 MHz to 1000 MHz"
Durability	500 mating cycles min.	500 mating cycles
Shell to Shell Conductivity	2.5 mV drop max	2.5 mV drop max
Contacts	Per AS39029	Per AS39029

2M805 MATERIALS AND FINISHES

Shells	Aluminum Alloy or Stainless Steel
Contacts	Copper Alloy, gold plated
Insulators	Polyphenylene Sulfide (PPS)
Contact Retention	Beryllium Copper Alloy
Grommet, Interfacial Seal, O-Ring	Fluorosilicone Rubber

2M805 Tri-Start Threaded Coupling

Ordering Guide for 2M805 Plugs & Receptacles

Micro38999

1.	2.	3.	4.	5.	6.	7.
SERIES	SHELL STYLE	SERVICE CLASS	SHELL SIZE INSERT ARANGEMENT	CONTACTS	KEYING	SUFFIX
2M805-003	-01	ZNU	5-3	P	A	

1. SERIES

Type	Part #	Description
CRIMP	**PLUG**	
	2M805-001	Plug with Banding Platform
	2M805-002	Plug with Accessory Threads
	RECEPTACLE	
	2M805-003	Receptacle with Banding Platform
	2M805-004	Receptacle with Accessory Threads
PCB/ SOLDER	**STRAIGHT PCB/SOLDER**	
	2M805-005	Receptacle w/ Epoxy Potting
	2M805-017	Receptacle for Open Face Immersion
	2M805-067	Receptacle with Standoff Flange for Mechanical PCB Strain Relief
	RIGHT ANGLE PCB	
	2M805-011	Receptacle w/ Right Angle PCB

2. SHELL STYLE

Part #	Desciption
PLUG	
-16	Self-Locking Plug with Ratchet mechanism
RECEPTACLE	
-01	In-Line Receptacle
-02	Square Flange Receptacle
-22	Square Flange Receptacle w/Clinch Nuts
-07	Jam Nut* Receptacle
STRAIGHT PCB/SOLDER	
-02	Square Flange Receptacle
-22	Square Flange Receptacle w/Clinch Nuts
-07	Jam Nut* Receptacle
RIGHT ANGLE	
-07	Jam Nut* Receptacle

*add "-501" as a suffix to the Jam Nut Part number to include a Hex Nut instead of a Spanner Nut.

3. SERVICE CLASS

Material	Part #	Description	RoHS
ALUMINUM	C	Anodized (Non-conductive)	✓
	M	Electroless Nickel	✓
	NF	Olive Drab Cadmium	
	MT	Durmalon (Ni PTFE)	✓
	ZN	Olive Drab Zinc Nickel	✓
	ZNU	Black Zinc Nickel	✓
	BEN	Black Electroless Nickel	✓
STAINLESS STEEL	Z1	Passivated	✓
	ZL	Electrolytic Nickel	✓

4. SHELL SIZE-INSERT ARRANGEMENT

See Table on pages 7-20

5. CONTACTS

Style	Part #	Description
CRIMP	P	Pin
	S	Socket
	A	Pin-Less Contacts
	B	Socket-Less Contacts

5. CONTACTS

STRAIGHT/RIGHT ANGLE		
PCB/ SOLDER	P	Pin-PCB
	S	Socket-PCB
	E	Pin-Solder Cup
	F	Socket-Solder Cup

6. KEYING

Part #	A°	B°
A	150°	210°
B	75°	210°
C	95°	230°
D	140°	275°

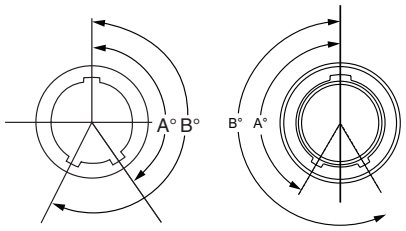

Receptacle View Plug View

For additional assistance building a part number and for 3D models, please visit www.amphenol-aerospace.com to access our 2M configurator.

2M805 High Speed Tri-Start Threaded Coupling

Ordering Guide for High Speed 2M805 Plugs & Receptacles

The 2M805 High Speed Series of connectors is ideal for use in USB 3.0, eSATA and other high speed databus applications where space is limited. These connectors utilize Fluoropolymer inserts that are optimized for high speed capability. Multiple standard insert arrangements are available. This series features self-locking plugs with a ratcheting mechanism and a Tri-Start ACME thread that provides full mating in one turn. Plugs andreceptacles are each available in two shell styles. The integral banding platform allows for direct termination of EMI shielding attachments and also allows for overmolding. Rear threads are also available for the attachment of backshells and other accessories. Contact termination styles include Crimp, PC Tail and Solder Cup.

1. SERIES	2. SHELL STYLE	3. SERVICE CLASS	4. SHELL SIZE INSERT ARANGEMENT	5. CONTACTS	6. KEYING
2M805-020	-16	ZNU	9-10	P	A

1. SERIES

Type	Part #	Description
CRIMP	**PLUG**	
	2M805-020	Plug with Banding Platform
	2M805-021	Plug with Accessory Threads
	RECEPTACLE	
	2M805-022	Receptacle with Banding Platform
	2M805-023	Receptacle with Accessory Threads

2. SHELL STYLE

Part #	Desciption
PLUG	
-16	Self-Locking Plug with Ratchet mechanism
RECEPTACLE	
-01	In-Line Receptacle
-02	Square Flange Receptacle
-12	Square Flange Rear Mount Non-Locking Clinch Nuts
-22	Square Flange Rear Mount Locking clinch Nuts
-07	Jam Nut* Receptacle

*add "-501" as a suffix to the Jam Nut Part number to include a Hex Nut instead of a Spanner Nut.

3. SERVICE CLASS

Material	Part #	Description	RoHS
ALUMINUM	M	Electroless Nickel	✓
	NF	Olive Drab Cadmium	
	MT	Durmalon (Ni PTFE)	✓
	ZNU	Black Zinc Nickel	✓
STAINLESS STEEL	Z1	Passivated	✓

4. SHELL SIZE-INSERT ARRANGEMENT

9-10	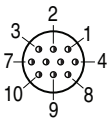
11-19	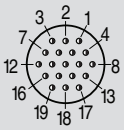
12-26	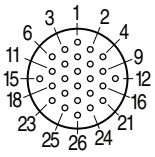

5. CONTACTS

Style	Part #	Description
CRIMP	P	Pin
	S	Socket
	A	Pin-Less Contacts
	B	Socket-Less Contacts

6. KEYING

Part #	A°	B°
A	150°	210°
B	75°	210°
C	95°	230°
D	140°	275°

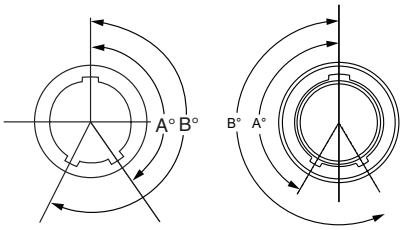

Receptacle View Plug View

For additional assistance building a part number and for 3D models, please visit www.amphenol-aerospace.com to access our 2M configurator.

2M805 Tri-Start Threaded Coupling

Connector Weight in Grams

Micro38999

SERIES 2M805 CONNECTOR WEIGHT IN GRAMS

Insert Arrange	Cable Plug	J/N Recept. Crimp	J/N Recept. PCB	Sq. Flange Recept. Crimp	Sq. Flange Recept. PCB
8-1P	7.5	5.8	5.7	5.8	4.6
8-1S	7.9	6.3	6.2	6.3	5.1
8-4P	8.3	6.6	6.5	6.6	5.4
8-4S	8.8	7.2	7.0	7.2	5.9
8-7P	7.3	5.6	5.5	5.6	4.4
8-7S	7.7	6.1	5.9	6.1	4.8
9-1P	10.9	9.0	9.0	6.8	7.7
9-1S	11.4	9.6	9.6	7.4	8.3
9-10P	10.7	8.8	8.8	6.6	7.5
9-10S	11.6	9.7	9.7	7.5	8.4
10-2P	13.3	10.2	10.3	8.9	9.4
10-2S	14.1	11.0	11.1	9.7	10.1
10-13P	12.7	9.6	9.7	8.3	8.7
10-13S	13.4	10.3	10.5	9.0	9.5
10-200P	13.9	10.8	10.9	9.5	9.9
10-200S	14.7	11.7	11.8	10.3	10.8
11-4P	15.4	12.1	13.1	10.3	11.3
11-4S	16.4	13.1	14.1	11.3	12.3
11-19P	14.3	11.0	12.0	9.2	10.2
11-19S	15.4	12.1	13.1	10.3	11.3
11-200P	14.9	11.6	12.5	9.8	10.8
11-200S	16.0	12.7	13.6	10.9	11.9
11-201P	15.4	12.1	13.1	10.3	11.3
11-201S	16.6	13.3	14.3	11.6	12.5
12-5P	17.6	13.9	16.3	12.2	13.1
12-5S	19.0	15.3	17.7	13.6	14.5
12-26P	15.8	12.1	14.5	10.5	11.3
12-26S	17.4	13.6	16.1	12.0	12.9
12-200P	16.5	12.8	15.2	11.1	12.0
12-200S	17.9	14.2	16.6	12.5	13.4
12-201P	16.6	12.9	15.3	11.2	12.1
12-201S	18.0	14.3	16.7	12.7	13.5

SERIES 2M805 CONNECTOR WEIGHT IN GRAMS

Insert Arrange	Cable Plug	J/N Recept. Crimp	J/N Recept. PCB	Sq. Flange Recept. Crimp	Sq. Flange Recept. PCB
12-202P	16.6	12.9	15.3	11.2	12.1
12-202S	18.2	14.4	16.8	12.8	13.6
15-2P	20.7	20.2	21.8	17.1	19.5
15-2S	22.3	21.9	23.4	18.7	21.1
15-3P	21.7	21.2	22.8	18.0	20.5
15-3S	23.4	23.0	24.5	19.8	22.2
15-7P	21.9	21.5	23.0	18.3	20.7
15-7S	24.5	24.1	25.6	20.9	23.3
15-37P	20.1	19.7	21.2	16.5	18.9
15-37S	23.0	22.6	24.1	19.4	21.8
15-200P	20.4	19.9	21.5	16.7	19.1
15-200S	22.6	22.1	23.7	18.9	21.3
15-201P	20.7	20.2	21.8	17.1	19.5
15-201S	23.0	22.6	24.1	19.4	21.8
18-5P	29.9	31.6	30.1	26.1	29.0
18-5S	32.9	34.5	33.1	29.0	32.0
18-12P	30.7	32.3	30.9	26.8	29.8
18-12S	34.3	36.0	34.5	30.5	33.4
18-55P	27.3	28.9	27.5	23.4	26.4
18-55S	30.7	32.3	30.9	26.8	29.8
19-7P	27.9	30.0	33.1	25.1	33.0
19-7S	31.0	33.1	36.2	28.2	36.1
19-14P	32.9	35.0	38.1	30.0	38.0
19-14S	32.6	34.7	37.7	29.7	37.6
19-85P	26.6	28.7	31.8	23.8	31.7
19-85S	31.1	33.2	36.3	28.3	36.2
23-17P	40.2	42.9	44.4	36.7	43.9
23-12S	45.2	48.0	49.5	41.8	49.0
23-22P	42.7	45.4	47.0	39.3	46.4
23-22S	49.6	52.4	53.9	46.2	53.4
23-130P	37.8	40.6	42.1	34.4	41.6
23-130S	44.9	47.7	49.3	41.6	48.7

2M805 Tri-Start Plug

2M805-001 and 2M805-002

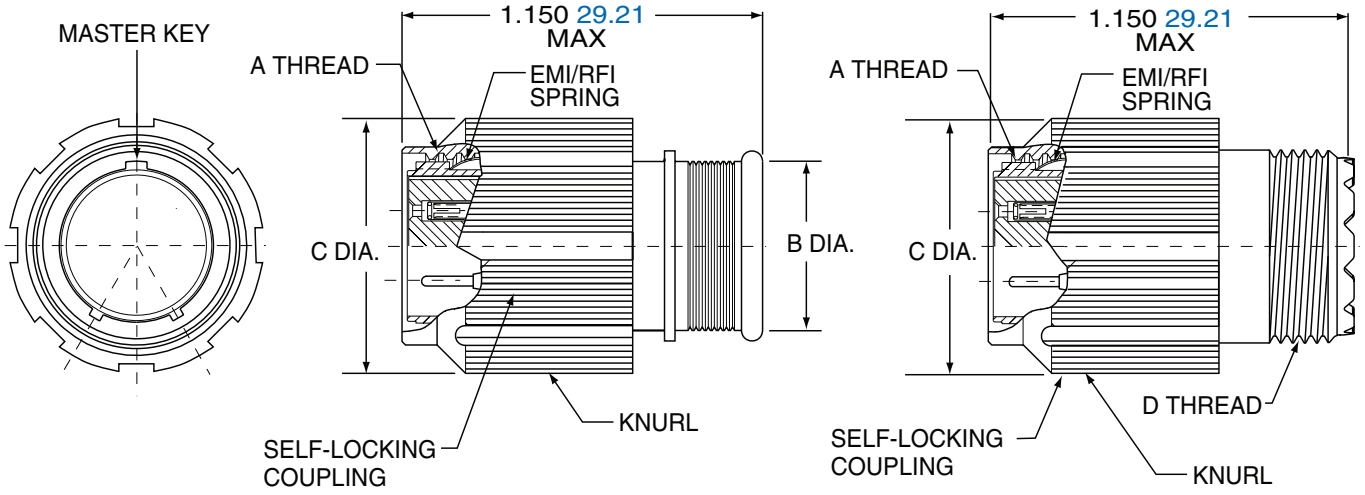

Shell Size	A Threads	B Dia.		C Dia.		D Threads Accessory
		in.	mm.	in.	mm.	
8	.5000-.1P-.3L-TS-2B	.317	8.05	.691	17.55	.3750-32 UNEF-2A
9	.5625-.1P-.3L-TS-2B	.397	10.08	.787	19.99	.4375-28 UNEF-2A
10	.6250-.1P-.3L-TS-2B	.473	12.01	.826	20.98	.5000-28 UNEF-2A
11	.6875-.1P-.3L-TS-2B	.519	13.18	.925	23.50	.5625-24 UNEF-2A
12	.7500-.1P-.3L-TS-2B	.585	14.86	.982	24.94	.6250-24 UNEF-2A
15	.9375-.1P-.3L-TS-2B	.687	17.45	1.105	28.07	.7500-20 UNEF-2A
18	1.1250-.1P-.3L-TS-2B	.884	22.45	1.275	32.39	.9375-20 UNEF-2A
19	1.1875-.1P-.3L-TS-2B	.884	22.45	1.310	33.27	.9375-20 UNEF-2A
23	1.4375-.1P-.3L-TS-2B	1.135	28.83	1.562	39.67	1.1875-18 UNEF-2A

2M805 Tri-Start In-Line Receptacle

2M805-003-01 and 2M805-004-01

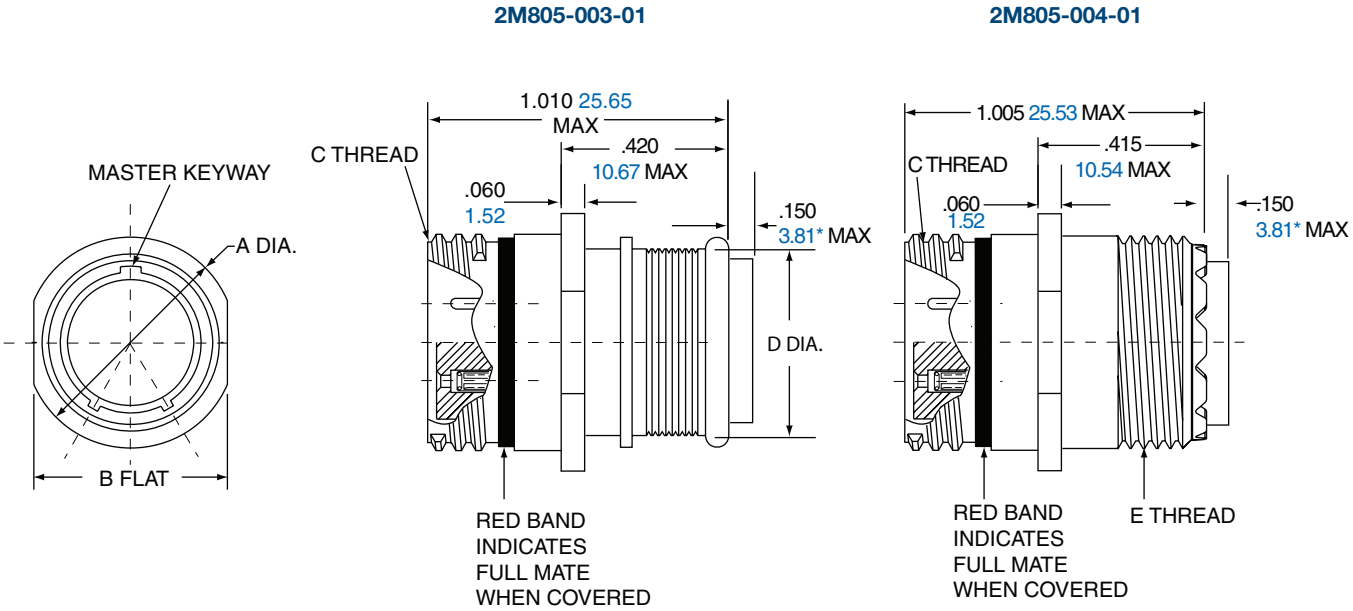

* Grommet protrudes for power/combo arrangement

Shell Size	A Dia.		B Flat		C Threads	D Dia.		E Threads Accessory
	in.	mm.	in.	mm.		in.	mm.	
8	.543	13.79	.513	13.03	.5000-.1P-.3L-TS-2A	.317	8.05	.3750-32 UNEF-2A
9	.608	15.44	.578	14.68	.5625-.1P-.3L-TS-2A	.397	10.08	.4375-28 UNEF-2A
10	.671	17.04	.641	16.28	.6250-.1P-.3L-TS-2A	.473	12.01	.5000-28 UNEF-2A
11	.733	18.62	.703	17.86	.6875-.1P-.3L-TS-2A	.519	13.18	.5625-24 UNEF-2A
12	.796	20.22	.766	19.46	.7500-.1P-.3L-TS-2A	.585	14.86	.6250-24 UNEF-2A
15	.983	24.97	.953	24.21	.9375-.1P-.3L-TS-2A	.687	17.45	.7500-20 UNEF-2A
18	1.168	29.67	1.138	28.91	1.1250-.1P-.3L-TS-2A	.884	22.45	.9375-20 UNEF-2A
19	1.238	31.45	1.208	30.68	1.1875-.1P-.3L-TS-2A	.884	22.45	.9375-20 UNEF-2A
23	1.485	37.72	1.455	39.96	1.4375-.1P-.3L-TS-2A	1.135	28.83	1.1875-18 UNEF-2A

2M805 Tri-Start Square Flange Receptacle

2M805-003-02 and 2M805-004-02

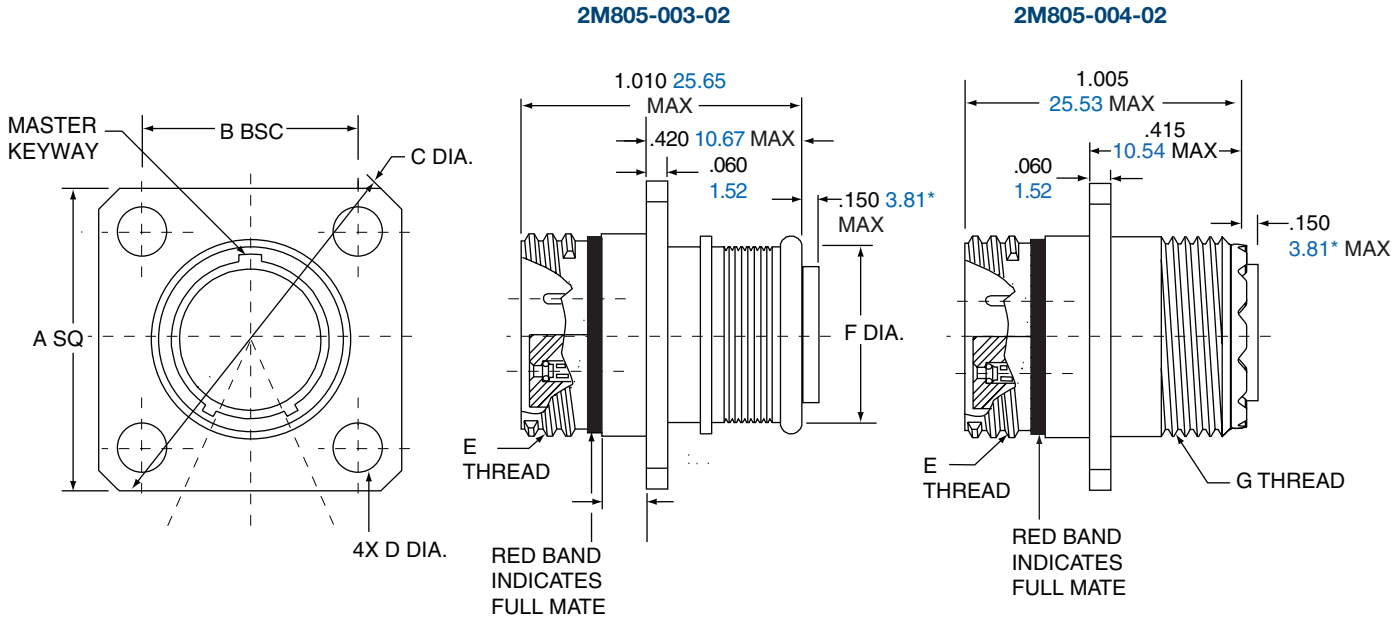

* Grommet protrudes for power/combo arrangement

Shell Size	A Sq.		B BSC.		C Dia.		D Dia.		E Threads	F Dia.		G Threads Accessory
	in.	mm.	in.	mm.	in.	mm.	in. ±.003	mm. ±.08		in.	mm.	
8	.853	21.67	.660	16.76	1.153	29.29	.091	2.31	.5000-.1P-.3L-TS-2A	.317	8.05	.3750-32 UNEF-2A
9	.916	23.27	.723	18.36	1.233	31.32	.091	2.31	.5625-.1P-.3L-TS-2A	.397	10.08	.4375-28 UNEF-2A
10	.978	24.84	.785	19.94	1.333	33.86	.091	2.31	.6250-.1P-.3L-TS-2A	.473	12.01	.5000-28 UNEF-2A
11	1.042	26.47	.848	21.54	1.413	35.89	.091	2.31	.6875-.1P-.3L-TS-2A	.519	13.18	.5625-24 UNEF-2A
12	1.102	27.99	.909	23.09	1.503	38.18	.091	2.31	.7500-.1P-.3L-TS-2A	.585	14.86	.6250-24 UNEF-2A
15	1.291	32.79	1.058	26.87	1.753	44.53	.125	3.18	.9375-.1P-.3L-TS-2A	.687	17.45	.7500-20 UNEF-2A
18	1.478	37.54	1.255	31.88	2.003	50.88	.125	3.18	1.1250-.1P-.3L-TS-2A	.884	22.45	.9375-20 UNEF-2A
19	1.540	39.12	1.327	33.71	2.097	53.26	.125	3.18	1.1875-.1P-.3L-TS-2A	.884	22.45	.9375-20 UNEF-2A
23	1.790	45.47	1.570	39.88	2.443	62.05	.125	3.18	1.4375-.1P-.3L-TS-2A	1.135	28.83	1.1875-18 UNEF-2A

2M805 Tri-Start Jam Nut Receptacle

2M805-003-07 and 2M805-004-07

Micro38999

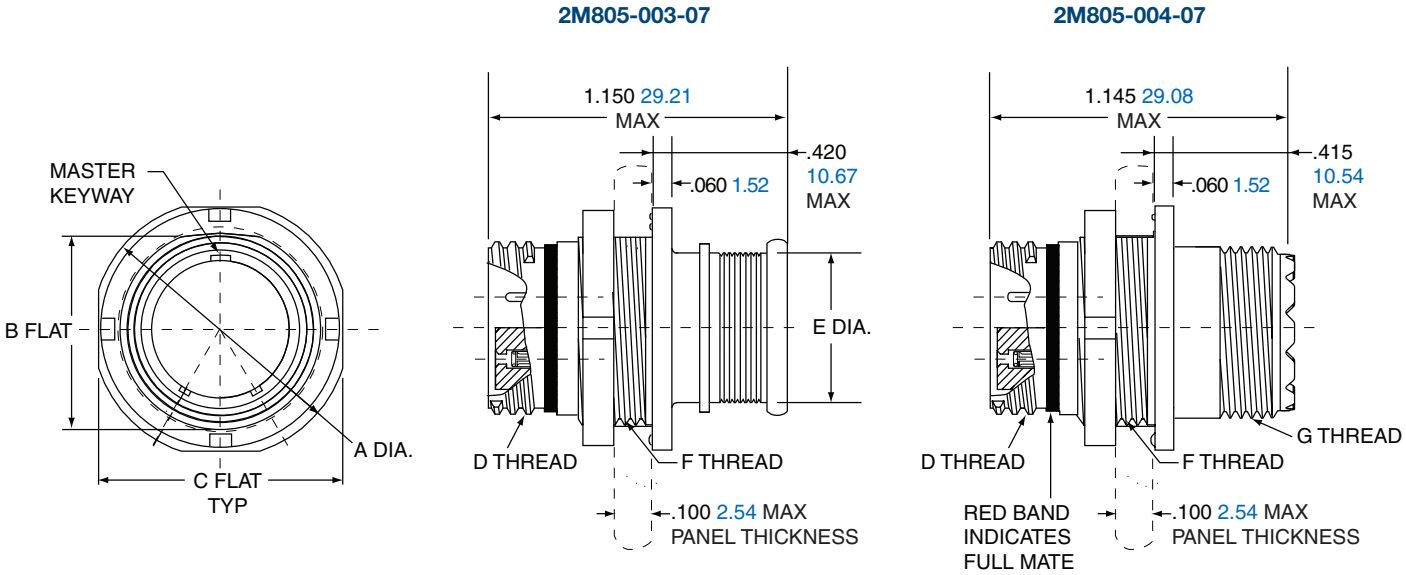

Shell Size	A Dia.		B Flat		C Flat		D Threads	E Dia.		F Threads	G Threads Accessory
	in.	mm.	in.	mm.	in.	mm.		in.	mm.		
8	.760	19.30	.535	13.59	.730	18.54	.5000-.1P-.3L-TS-2A	.317	8.05	.5625-28 UN-2A	.3750-32 UNEF-2A
9	.880	22.35	.661	16.79	.850	21.59	.5625-.1P-.3L-TS-2A	.397	10.08	.6875-28 UN-2A	.4375-28 UNEF-2A
10	.880	22.35	.661	16.79	.850	21.59	.6250-.1P-.3L-TS-2A	.473	12.01	.6875-28 UN-2A	.5000-28 UNEF-2A
11	.955	24.26	.721	18.31	.925	23.50	.6875-.1P-.3L-TS-2A	.519	13.18	.7500-28 UN-2A	.5625-24 UNEF-2A
12	1.065	27.05	.784	19.91	1.039	26.39	.7500-.1P-.3L-TS-2A	.585	14.86	.8125-28 UN-2A	.6250-24 UNEF-2A
15	1.203	30.56	.970	24.64	1.173	29.79	.9375-.1P-.3L-TS-2A	.687	17.45	1.0000-28 UN-2A	.7500-20 UNEF-2A
18	1.395	35.43	1.150	29.21	1.359	34.52	1.1250-.1P-.3L-TS-2A	.884	22.45	1.1875-28 UN-2A	.9375-20 UNEF-2A
19	1.450	36.83	1.221	31.01	1.420	36.07	1.1875-.1P-.3L-TS-2A	.884	22.45	1.2500-28 UN-2A	.9375-20 UNEF-2A
23	1.705	43.31	1.470	37.34	1.678	42.62	1.4375-.1P-.3L-TS-2A	1.135	28.83	1.5000-28 UN-2A	1.1875-18 UNEF-2A

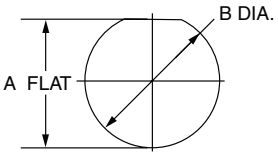

PANEL CUTOUT FOR JAM NUT				
	A Flat		B Dia	
Shell Size	in. ±.002	mm. ± 0.05	in. ±.005	mm. ± 0.13
8	.543	13.79	.572	14.53
9	.669	16.99	.698	17.73
10	.669	16.99	.698	17.73
11	.729	18.51	.760	19.30
12	.792	20.17	.822	20.88
15	.978	24.84	1.010	25.65
18	1.155	29.34	1.198	30.43
19	1.231	31.27	1.260	32.00
23	1.480	37.59	1.510	38.35

2M805 Tri-Start PC Tail, Solder Cup Square Flange

2M805-005-02 and 2M805-017-02

2M805-005-02
2M805-017-02

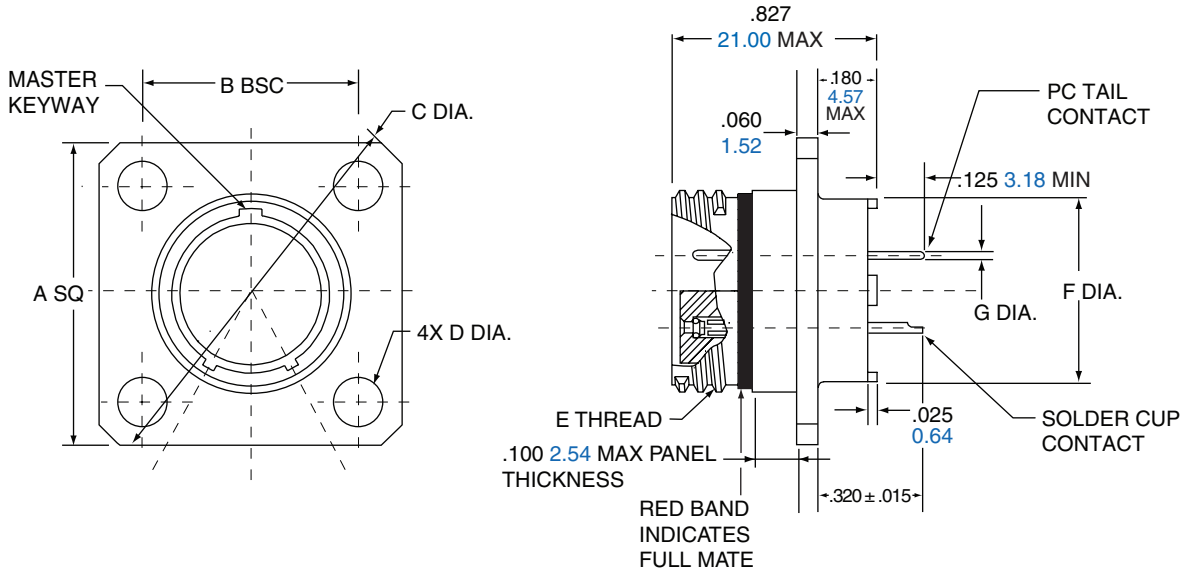

Shell Size	A Sq.		B BSC.		C Dia.		D Dia.		E Threads	F Dia.		G PC Tail Dia.
	in.	mm.	in.	mm.	in.	mm.	in. ±.003	mm. ±.08		in.	mm.	
8	.853	21.67	.660	16.76	1.153	29.29	.091	2.31	.5000-.1P-.3L-TS-2A	.330	8.38	**#23** .018/.022 0.46/0.56
9	.916	23.27	.723	18.36	1.233	31.32	.091	2.31	.5625-.1P-.3L-TS-2A	.432	10.97	
10	.978	24.84	.785	19.94	1.333	33.86	.091	2.31	.6250-.1P-.3L-TS-2A	.493	12.52	**#20/20HD** .025/.027 0.64/0.69
11	1.042	26.47	.848	21.54	1.413	35.89	.091	2.31	.6875-.1P-.3L-TS-2A	.551	14.00	
12	1.102	27.99	.909	23.09	1.503	38.18	.091	2.31	.7500-.1P-.3L-TS-2A	.620	15.78	**#16** .060/.064 1.521/1.63
15	1.291	32.79	1.058	26.87	1.753	44.53	.125	3.18	.9375-.1P-.3L-TS-2A	.703	17.86	
18	1.478	37.54	1.255	31.88	2.003	50.88	.125	3.18	1.1250-.1P-.3L-TS-2A	.863	21.92	**#12** .092/.096 2.34/2.44
19	1.540	39.12	1.327	33.71	2.097	53.26	.125	3.18	1.1875-.1P-.3L-TS-2A	.912	23.16	
23	1.790	45.47	1.570	39.88	2.443	62.05	.125	3.18	1.4375-.1P-.3L-TS-2A	1.162	29.51	

2M805 Tri-Start PC Tail, Solder Cup Jam Nut

2M805-005-07 and 2M805-017-07

Micro38999

2M805-005-07
2M805-017-07

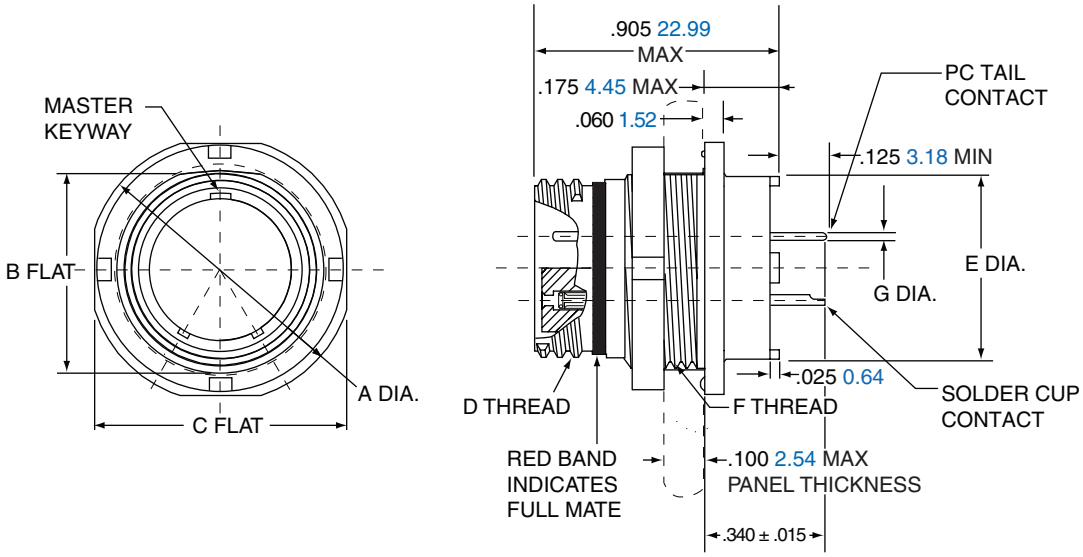

Shell Size	A Dia.		B Flat		C Flat		D Threads	E Dia.		F Threads	G PC Tail Dia.
	in.	mm.	in.	mm.	in.	mm.		in.	mm.		
8	.760	19.30	.535	13.59	.730	18.54	.5000-.1P-.3L-TS-2A	.330	8.38	.5625-28 UN-2A	**#23** .018/.022 0.46/0.56
9	.880	22.35	.661	16.79	.850	21.59	.5625-.1P-.3L-TS-2A	.432	10.97	.6875-28 UN-2A	
10	.880	22.35	.661	16.79	.850	21.59	.6250-.1P-.3L-TS-2A	.493	12.52	.6875-28 UN-2A	**#20/20HD** .025/.027 0.64/0.69
11	.955	24.26	.721	18.31	.925	23.50	.6875-.1P-.3L-TS-2A	.551	14.00	.7500-28 UN-2A	
12	1.060	26.92	.784	19.91	1.035	26.29	.7500-.1P-.3L-TS-2A	.620	15.78	.8125-28 UN-2A	**#16** .060/.064 1.521/1.63
15	1.203	30.56	.970	24.64	1.173	29.79	.9375-.1P-.3L-TS-2A	.703	17.86	1.0000-28 UN-2A	
18	1.395	35.43	1.150	29.21	1.359	34.52	1.1250-.1P-.3L-TS-2A	.863	21.92	1.1875-28 UN-2A	
19	1.450	36.83	1.221	31.01	1.420	36.07	1.1875-.1P-.3L-TS-2A	.912	23.16	1.2500-28 UN-2A	**#12** .092/.096 2.34/2.44
23	1.705	43.31	1.470	37.34	1.675	42.55	1.4375-.1P-.3L-TS-2A	1.162	29.51	1.5000-28 UN-2A	

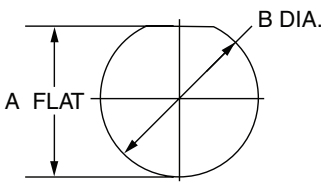

PANEL CUTOUT FOR JAM NUT				
	A Flat		B Dia	
Shell Size	in. ±.002	mm. ± 0.05	in. ±.005	mm. ± 0.13
8	.543	13.79	.572	14.53
9	.669	16.99	.698	17.73
10	.669	16.99	.698	17.73
11	.729	18.51	.760	19.30
12	.792	20.17	.822	20.88
15	.978	24.84	1.010	25.65
18	1.155	29.34	1.198	30.43
19	1.231	31.27	1.260	32.00
23	1.480	37.59	1.510	38.35

2M805 PCB Standoff Double Flange

2M805-067-07

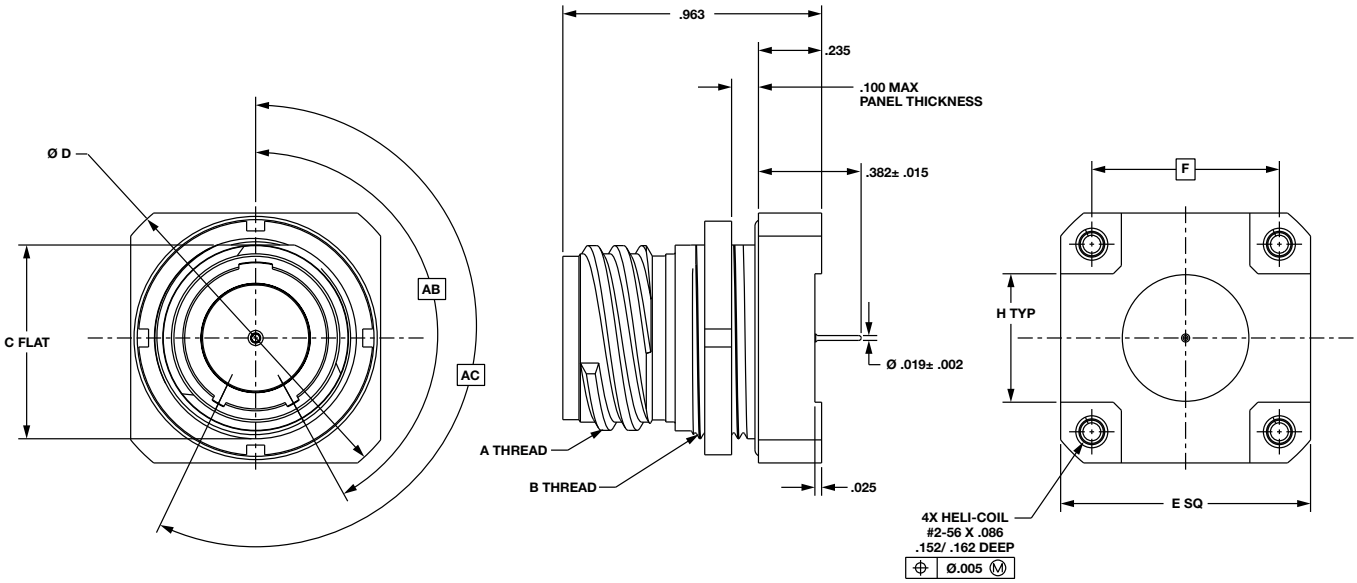

Shell Size	A Threads	B Threads	C Flat		D Dia.		E SQ		F		H Typ	
			in.	mm.	in.	mm.	in.	mm.	in.	mm.	in.	mm.
8	.5000-.1P-.3L-TS-2A	.5625-28 UN-2A	.535	13.59	.923	23.44	.732	18.59	.496	12.60	.273	6.93
9	.5625-.1P-.3L-TS-2A	.6875-28 UN-2A	.661	16.79	1.113	28.27	.862	21.89	.627	15.93	.404	10.26
10	.6250-.1P-.3L-TS-2A	.6875-28 UN-2A	.661	16.79	1.113	28.27	.862	21.89	.627	15.93	.404	10.26
11	.6875-.1P-.3L-TS-2A	.7500-28 UN-2A	.721	18.31	1.203	30.55	.933	23.70	.698	17.73	.475	12.06
12	.7500-.1P-.3L-TS-2A	.8125-28 UN-2A	.784	19.91	1.373	34.87	1.047	26.59	.812	20.62	.589	14.96
15	.9375-.1P-.3L-TS-2A	1.0000-28 UN-2A	.970	24.64	1.563	39.70	1.178	29.92	.943	23.95	.720	18.28
18	1.1250-.1P-.3L-TS-2A	1.1875-28 UN-2A	1.147	29.13	1.803	45.79	1.354	34.39	1.119	28.42	.896	22.75
19	1.1875-.1P-.3L-TS-2A	1.2500-28 UN-2A	1.221	31.01	1.883	47.83	1.410	35.81	1.175	29.84	.952	24.18
23	1.4375-.1P-.3L-TS-2A	1.5000-28 UN-2A	1.470	37.34	2.273	57.73	1.683	42.75	1.448	36.78	1.225	31.11

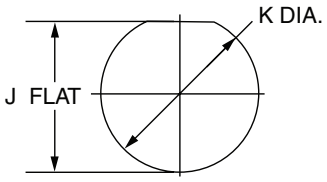

PANEL CUTOUT				
	A Flat		B Dia	
Shell Size	in. ±.002	mm. ± 0.05	in. ±.005	mm. ± 0.13
8	.543	13.79	.572	14.53
9	.669	16.99	.698	17.73
10	.669	16.99	.698	17.73
11	.729	18.51	.760	19.30
12	.792	20.17	.822	20.88
15	.978	24.84	1.010	25.65
18	1.155	29.34	1.198	30.43
19	1.231	31.27	1.260	32.00
23	1.480	37.59	1.510	38.35

2M805 Tri-Start Protection Cap

Ordering Guide for 2M667-261 and 2M667-262

Micro38999

2M805 Tri-Start Protection Caps are available in plug and receptacle versions. Protective caps keep the connector interface dry and clean while not in use. Caps come in a variety of materials, lanyard styles, and lengths to accommodate specific design requirements.

1. SERIES	2. SERVICE CLASS	3. ATTACHMENT TYPE	4. SHELL SIZE	5. ATTACHMENT CODE	6. ATTACHMENT LENGTH IN INCHES
2M667-26X	-NF	-H	9	04	-5

1. SERIES

Part #	Description
2M667-261	Protection Caps 2M805 Plugs
2M667-262	Protection Caps 2M805 Receptacles

2. SERVICE CLASS

Material	Part #	Description	RoHS
ALUMINUM	-C	Black Anodized (Non-conductive)	✓
	-M	Electroless Nickel	✓
	-NF	Olive Drab Cadmium	
	-MT	Durmalon (Ni PTFE)	✓
	-ZN	Olive Drab Zinc Nickel	✓
	-ZNU	Black Zinc Nickel	✓
STAINLESS STEEL	-Z1	Passivated	✓
	-ZL	Electrolytic Nickel	✓

3. ATTACHMENT TYPE

	Part #	Description
	-G	Nylon Rope
	-H	Stainless Steel Wire Rope, Tef-lon® Jacket
	-N	No Attachment
	-S	Stainless Steel Sash Chain
	-SK	Nylon Rope With Slip Knot
	-T	Stainless Steel Wire Rope, No Jacket
	-U	Stain-less Steel Wire Rope, Polyurethane Jacket

4. SHELL SIZE

Part #
8
9
10
11
12
15
18
19
23

5. ATTACHMENT CODE

	Omit for attachment Types N (No Attachment) and SK (Slip Knot)		For Shell Size
	Small Ring	01 –.126 (3.20) I.D.	
		02 –.145 (3.68) I.D.	
		04 –.188 (4.78) I.D.	
		06 –.197 (5.00) I.D.	
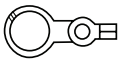	Large Ring	17 –.635 (16.13) I.D.	8
		18 –.695 (17.65) I.D.	9, 10
		19 – .885 (22.48) I.D.	12
		20 –1.070 (27.17) I.D.	15
		22 –1.210 (30.73) I.D.	18
		23 –1.275 (32.39) I.D.	19
		25 –1.530 (38.86) I.D.	23
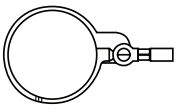	Split Ring	50 –.420 (10.67) I.D.	
		52 –.480 (12.19) I.D.	
		54 –.635 (16.13) I.D.	
		56 –.745 (18.92) I.D.	
		58 –.885 (22.48) I.D.	
		60 –1.010 (25.65) I.D.	
		64 –1.125 (28.58) I.D.	
		68 –1.345 (34.16) I.D.	

5. ADDITIONAL ATTACHMENT CODE

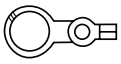	Large Ring	14 –.385 (9.78) I.D.
		15 –.445 (11.30) I.D.
		16 –.570 (14.48) I.D.
		21 –1.135 (38.86) I.D.
		26 –.950 (24.13) I.D.
		27 –.766 (19.46) I.D.
		28 –1.015 (25.78) I.D.
		29 –.315 (8.0) I.D.
		30 –1.380 (35.05) I.D.
		31 –.820 (20.83) I.D.
		32 –265 (6.7) I.D.
		33 –.510 (12.95) I.D.

6. ATTACHMENT LENGTH IN INCHES

-5	Inch Length

Omit for attachment Type N (No Attachment)
Example "-5" equals five inch length

Assembly Instructions for Protection Cap, see page 100.

2M805 Tri-Start Protection Cap

Metal Protective Caps 2M667-261 and 2M667-262

2M667-261

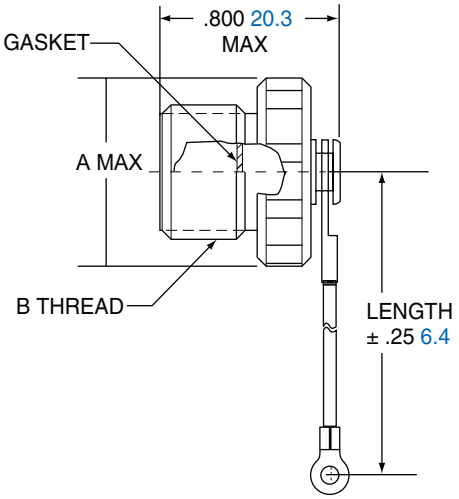

2M667-262

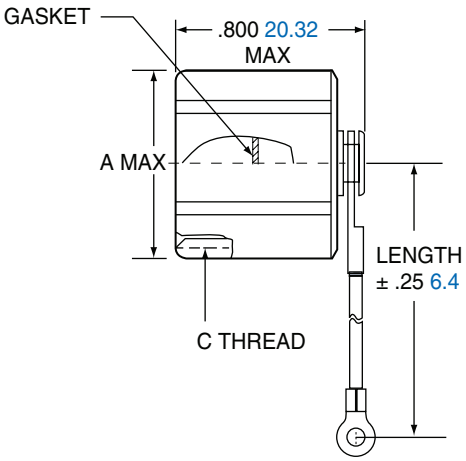

Shell Size	A Max.		B Thread	C Thread
	in.	mm.		
8	.656	16.66	.5000-.1P-.3L-TS-2A	.5000-.1P-.3L-TS-2B
9	.718	18.24	.5625-.1P-.3L-TS-2A	.5625-.1P-.3L-TS-2B
10	.781	19.84	.6250-.1P-.3L-TS-2A	.6250-.1P-.3L-TS-2B
11	.844	21.44	.6875-.1P-.3L-TS-2A	.6875-.1P-.3L-TS-2B
12	.906	23.01	.7500-.1P-.3L-TS-2A	.7500-.1P-.3L-TS-2B
15	1.094	27.79	.9375-.1P-.3L-TS-2A	.9375-.1P-.3L-TS-2B
18	1.281	32.54	1.1250-.1P-.3L-TS-2A	1.1250-.1P-.3L-TS-2B
19	1.343	34.11	1.1875-.1P-.3L-TS-2A	1.1875-.1P-.3L-TS-2B
23	1.603	40.72	1.4375-.1P-.3L-TS-2A	1.4375-.1P-.3L-TS-2B

MATERIALS AND FINISHES	
Cover	Aluminum alloy or stainless steel
Gasket	Fluorosilicone rubber
Wire, Hardware	Stainless steel, passivated

2M804 Push-Pull Quick-Disconnect

General Information

Micro38999

Page Guide

Order D41
Weight D42
Plugs D43
Jam Nut Rear D44
Jam Nut Front D45
In-Line D46
PCB/Jam Nut (R) D47
PCB/Jam Nut (F) D48
Panel Mnt Plug D49
Jam Nut Panel Mt D50
Flange Mt Plug D51
PCB Double Flange D52
Protection Caps D53-57

Amphenol's 2M Micro38999 Connector Series… The New Aerospace Standard

Averaging less than half the size and weight of their 38999 ancestors, Amphenol's 2M Micro38999 series are an easy and inexpensive way to take weight out of your system. 2M meet or exceed most environmental and performance requirements listed in MIL-DTL-38999, so modernizing your equipment doesn't mean sacrificing ruggedness. With almost 2,000,000 configurations in every termination style and a full complement of accessories available right out of the catalog, customization has never been easier. Smarter, faster and smaller: Amphenol's 2M… the only connector you'll ever need.

2M804 Features

- Push-pull coupling
- Excellent EMI shielding
- Rated to 38999 immersions
- Quick-disconnect

Why 2M804?

2M804 connectors are the most rugged push-pull connectors on the market. Designed for use in soldier-worn tactical equipment deployed by the United States military, these connectors were built to perform. Waterproof, dustproof, and highly resistant to EMI interference, these connectors are just as at home on the battlefield as they are in use on C4I and IFE systems. With up to 85 signals, panel-mounting options, and customizable separation forces, there's no place on land, sea, or air 2M804 can't go.

2M804 VS 38999

Specification	2M804	MIL-DTL 38999 Series III
Signal Count	1 to 85	1 to 187
Insulation Resistance	5,000 megaohms min	5,000 megaohms min
Operating Temperature	-65°C to +175°C	-65°C to +175°C
Shock	300 G ± 15	300 G ± 15
Vibration	"37.0 G Random 30.0 G Sine"	"43.9 G Random 60.0 G Sine"
Shielding Effectiveness	"40 dB min. from 100 MHz to 1000 MHz"	"65 dB min. from 100 MHz to 1000 MHz"
Durability	1,000 mating cycles min.	500 mating cycles
Shell to Shell Conductivity	2.5 mV drop max	2.5 mV drop max
Contacts	Per AS39029	Per AS39029

2M804 MATERIALS AND FINISHES

Shells	Aluminum Alloy or Stainless Steel
Contacts	Copper Alloy, gold plated
Insulators	Polyphenylene Sulfide (PPS)
Contact Retention	Beryllium Copper Alloy
Grommet, Interfacial Seal, O-Ring	Fluorosilicone Rubber
Canted Coil Spring	Stainless Steel, Gold plated

2M804 Push-Pull Crimp Receptacles

Ordering Guide for 2M804-001, 002, 003, 004

1. SERIES	2. SHELL STYLE	3. SERVICE CLASS	4. SHELL SIZE-INSERT ARANGEMENT	5. CONTACTS	6. KEYING	7. SUFFIX
2M804-00X	-06	ZNU	6-7	P	A	

1. SERIES

Type	Part #	Description
CRIMP	**PLUGS**	
	2M804-001	Plug with Integral Backshell
	2M804-002	Plug with Accessory Threads
	RECEPTACLE	
	2M804-003	Receptacle with Banding Platform
	2M804-004	Receptacle with Accessory Threads
PCB/SOLDER	**PCB/SOLDER RECEPTACLES**	
	2M804-005	Receptacle w/ Epoxy Potting
	2M804-020	Receptacle for Open Face Immersion
	2M804-025	Receptacle with Standoff Flange for Mechanical PCB Strain Relief
	PCB/SOLDER PLUGS	
	2M804-009	Plugs with Solder Cup or PCB termination with Standard Epoxy Potting
	2M804-021	Plugs with Solder Cup or PCB Termination with Special Sealing for Open Face (unmated) Water Immersion Requirements. 100% Leak Tested. To maintain a helium leak rate of $1x10^{-4}$ cc/sec. pressure differential from -65°C to 175°C.

4. SHELL SIZE-INSERT ARRANGEMENT

See Table on pages 7-20

2. SHELL STYLE RECEPTACLE

Part #	Desciption
PLUGS	
-06	Plug
RECEPTACLE	
-00	Jam Nut* for Front Panel
-01	In-Line
-07	Jam Nut* for Rear Panel
PCB/SOLDER RECEPTACLES	
-00	Jam Nut* for Front Panel Mounting
-07	Jam Nut* Rear Panel Mounting
PCB/SOLDER PLUGS	
-00	Jam Nut for Front Panel mounting
-07	Jam Nut for Rear Panel Mounting
-02	Flange Mount, Rear Panel

*add "-501" as a suffix to the Jam Nut Part number to include a Hex Nut instead of a Spanner Nut.

3. SERVICE CLASS

Material	Part #	Description	RoHS
ALUMINUM	C	Anodized (Non-conductive)	✓
	M	Electroless Nickel	✓
	NF	Olive Drab Cadmium	
	MT	Durmalon (Ni PTFE)	✓
	ZN	Olive Drab Zinc Nickel	✓
	ZNU	Black Zinc Nickel	✓
	BEN	Black Electroless Nickel	✓
STAINLESS STEEL	Z1	Passivated	✓
	ZL	Electrolytic Nickel	✓

5. CONTACTS

Style	Part #	Description
CRIMP	P	Pin
	S	Socket
	A	Pin-Less Contacts
	B	Socket-Less Contacts
PCB/SOLDER		
PCB/ SOLDER	P	Pin-PCB
	S	Socket-PCB
	E	Pin-Solder Cup
	F	Socket-Solder Cup

6. KEYING*

Part #	A°	B°
A	150°	210°
B	75°	210°
C	95°	230°
D	140°	275°

*For single master key omit (leave blank)

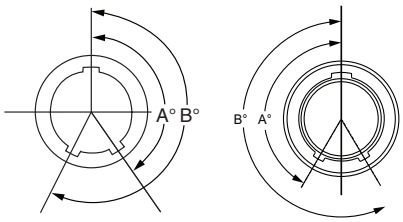

Receptacle View Plug View

For additional assistance building a part number and for 3D models, please visit www.amphenol-aerospace.com to access our 2M configurator.

2M804 Push-Pull Quick-Disconnect

Connector Weights

SERIES 2M804 WEIGHTS IN GRAMS				
		Jam Nut Receptacle		
Insert Arrg.	Plug	Rear Mount	Front Mount	In-Line Receptacle
5-3P	2.2	8.0	9.7	4.0
5-3S	2.4	8.3	9.8	4.1
6-1P	3.1	7.2	11.8	5.2
6-1S	3.4	7.5	12.1	5.5
6-4P	2.8	8.8	11.4	4.8
6-4S	3.0	9.0	11.6	5.1
6-7P	3.0	9.1	11.7	5.3
6-7S	3.2	9.5	12.0	5.5
7-1P	3.7	11.1	16.4	10.1
7-1S	4.3	11.7	16.9	10.7
7-10P	3.7	10.9	16.2	10.0
7-10S	4.2	11.3	16.5	10.3
8-2P	5.0	10.9	13.5	8.0
8-2S	5.7	5.7	11.7	9.0
8-13P	4.3	10.6	12.4	7.4
8-13S	4.8	11.0	13.0	8.1
8-200P	5.3	11.2	13.9	8.4
8-200S	6.1	12.0	14.6	9.1
9-4P	5.7	15.2	21.1	11.0
9-4S	6.7	16.2	22.1	12.0
9-19P	4.6	14.1	20.0	9.9
9-19S	4.8	14.9	21.1	9.8
9-200P	5.2	14.6	20.6	10.5
9-200S	6.3	15.7	21.7	11.6
9-201P	5.8	15.3	21.2	11.1
9-201S	6.9	16.4	22.3	12.2
10-5P	7.3	15.5	23.3	11.9
10-5S	8.7	16.9	24.8	13.3
10-26P	5.4	13.6	20.5	10.1
10-26S	6.2	13.9	21.1	10.5
10-200P	6.2	14.4	22.2	10.8
10-200S	7.6	15.8	23.7	12.2
10-201P	6.3	14.5	22.3	10.9
10-201S	7.7	16.0	23.8	12.3
10-202P	6.3	14.5	22.3	10.9
10-202S	7.8	16.1	23.9	12.4
12-2P	10.7	21.5	26.1	20.8
12-2S	12.3	23.1	27.7	22.4
12-3P	11.7	22.4	27.1	21.8
12-3S	13.4	24.2	28.8	23.4
12-7P	11.9	22.7	27.3	22.0

SERIES 2M804 WEIGHTS IN GRAMS				
		Jam Nut Receptacle		
Insert Arrg.	Plug	Rear Mount	Front Mount	In-Line Receptacle
12-7S	14.5	25.3	29.9	24.6
12-37P	10.1	21.5	25.5	22.4
12-37S	11.8	23.1	27.2	22.1
12-200P	10.3	21.1	25.7	20.5
12-200S	12.5	23.3	27.9	22.7
12-201P	10.7	21.5	26.1	22.8
12-201S	13.0	23.8	28.4	23.1
14-5P	15.4	28.3	33.6	26.3
14-5S	18.4	31.2	36.5	29.3
14-12P	16.2	29.0	34.3	27.1
14-12S	19.8	32.7	38.0	30.7
14-55P	12.8	25.6	30.9	23.7
14-55S	15.6	28.3	33.8	26.5

SERIES 2M804 UNMATE FORCE		
	Average Force	
Layout	Pounds	Newtons
5-3	10.6	47.1
6-4	10.8	48.0
6-7	11.4	50.7
7-10	12.0	53.4
8-13	12.6	56.0
9-19	13.8	61.4
10-26	15.2	67.6
12-37	17.4	77.4
14-55	21.0	93.4

Note: Contact Amphenol if modified force values are needed.

2M804 Push-Pull Plug Connector

2M804-001-06 and 2M804-002-06

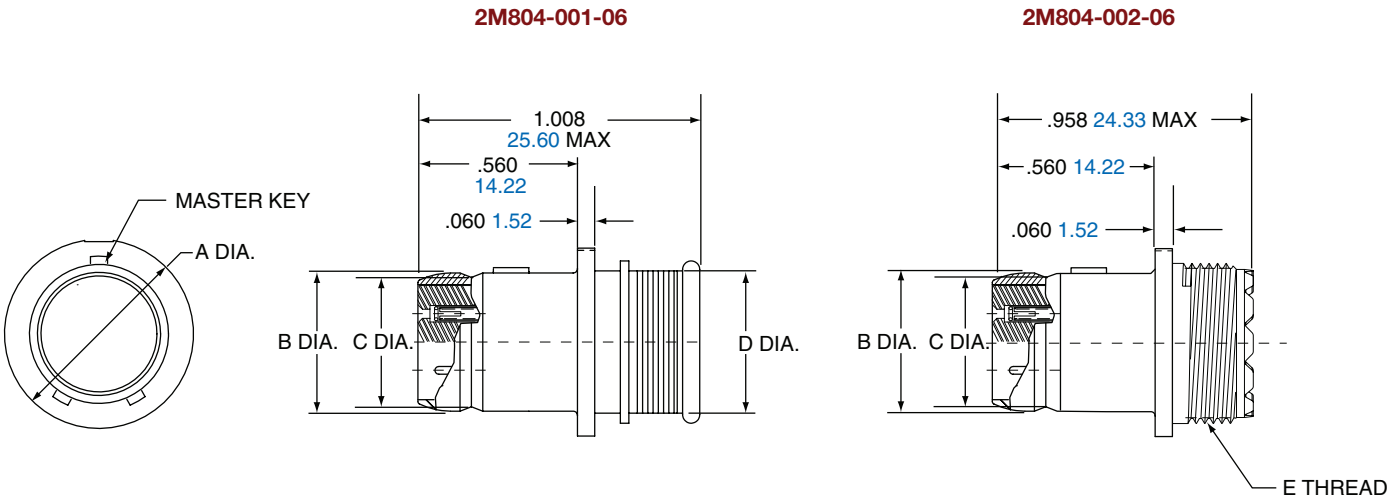

Shell Size	A Dia.		B Dia.		C Dia.		D Dia.		E Thread UNEF-2A
	in.	mm	in.	mm.	in.	mm	in.	mm.	
5	.418	10.62	.245	6.22	.218	5.54	.248	6.30	.2500-32
6	.488	12.40	.310	7.87	.275	6.99	.293	7.44	.3125-32
7	.561	14.25	.378	9.60	.350	8.89	.388	9.86	.4375-28
8	.603	15.32	.426	10.82	.395	10.03	.448	11.38	.5000-28
9	.663	16.84	.482	12.24	.450	11.43	.503	12.78	.5625-24
10	.743	18.87	.555	14.10	.525	13.34	.563	14.30	.6250-24
12	.851	21.62	.672	17.07	.642	16.31	.653	16.59	.6875-24
14	.978	24.84	.795	20.19	.761	19.33	.803	20.40	.9375-20
15	1.038	26.37	.863	21.92	.837	21.26	.853	21.67	.9375-20

2M804 Push-Pull Jam Nut Rear Panel

2M804-003-07 and 2M804-004-07

Micro38999

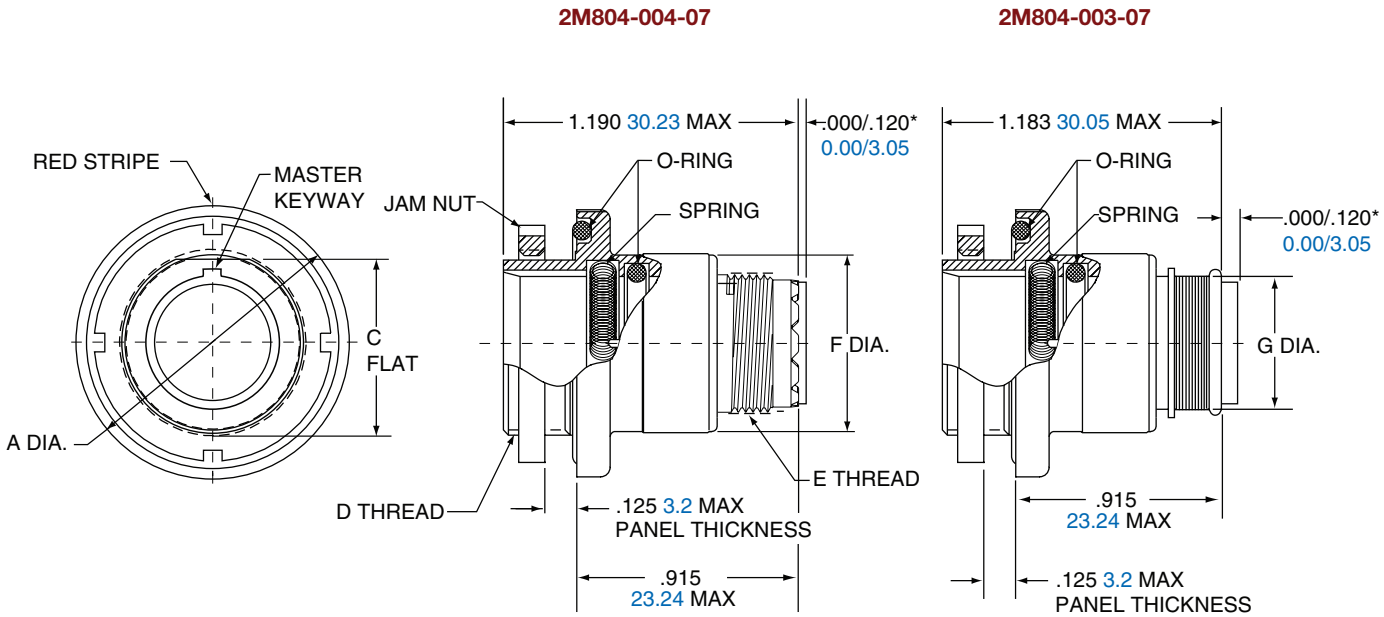

*Grommet protrudes for power/combo arrangements

Shell Size	A Dia.		C Flat		D Thread UN-2A	E Thread UNEF-2A	F Dia.		G Dia.	
	in.	mm	in.	mm			in.	mm.	in.	mm.
5	.773	19.63	.414	10.52	.4375-32	.2500-32	.448	11.38	.248	6.30
6	.833	21.16	.468	11.89	.5000-32	.3125-32	.513	13.03	.293	7.44
7	.903	22.94	.593	15.06	.6250-28	.4375-28	.573	14.55	.388	9.86
8	.958	24.33	.593	15.06	.6250-28	.5000-28	.596	15.14	.448	11.38
9	.998	25.35	.653	16.59	.6875-28	.5625-24	.691	17.55	.503	12.78
10	1.083	27.51	.721	18.31	.7500-28	.6250-24	.728	18.49	.563	14.30
12	1.183	30.05	.843	21.41	.8750-28	.6875-24	.883	22.43	.653	16.59
14	1.323	33.60	.968	24.59	1.0000-28	.9375-20	1.003	25.48	.803	20.40
15	1.373	34.87	1.036	26.31	1.0625-20	.9375-20	1.063	27.00	.853	21.67

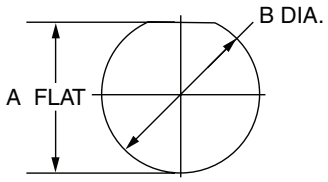

JAM NUT PANEL CUTOUT				
	A Flat		B Dia.	
Shell Size	in. ±.002	mm. ± 0.05	in. ±.005	mm. ± 0.13
5	.423	10.74	.448	11.38
6	.475	12.07	.510	12.95
7	.602	15.29	.635	16.13
8	.602	15.29	.635	16.13
9	.663	16.84	.698	17.73
10	.729	18.82	.760	19.30
12	.851	21.62	.885	22.48
14	.976	24.79	1.010	25.65
15	1.043	26.49	1.073	27.25

2M804 Push-Pull Jam Nut Front Panel Recept.

2M804-003-00 and 2M804-004-00

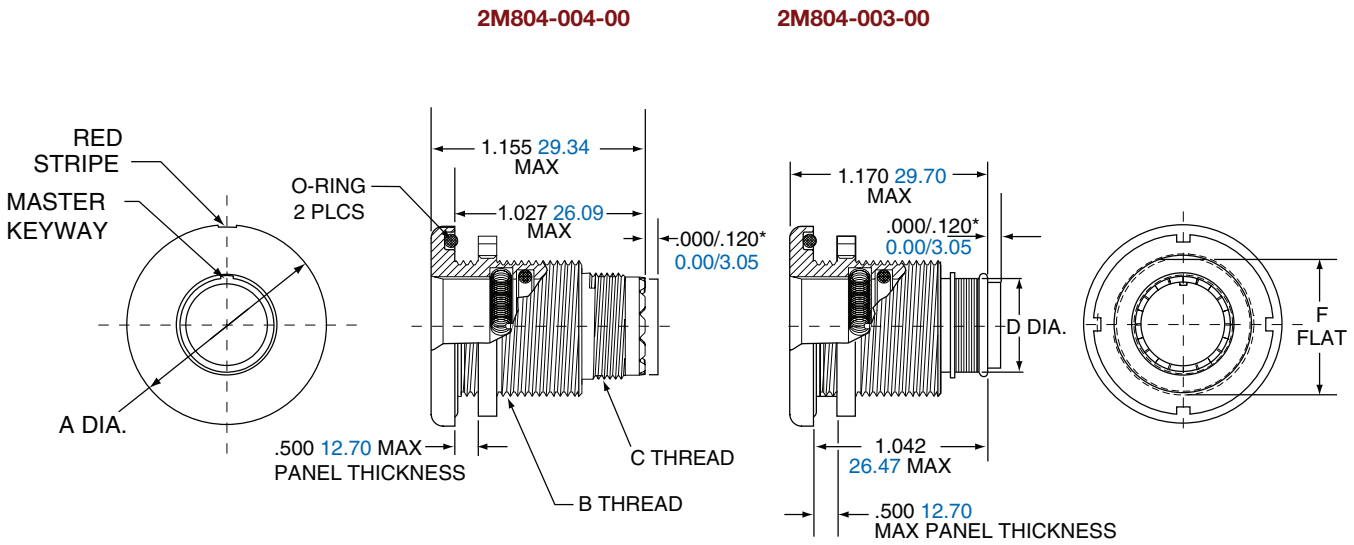

*Grommet protrudes for power/combo arrangements

Shell Size	A Dia.		B Thread UN-2A	C Thread UNEF-2A	D Dia.		F Flat.	
	in.	mm			in.	mm.	in.	mm.
5	.830	21.08	.5000-32	.2500-32	.248	6.30	.470	11.94
6	.884	22.45	.5625-32	.3125-32	.293	7.44	.529	13.44
7	.994	25.25	.6875-28	.4375-28	.388	9.86	.663	16.84
8	.994	25.25	.6875-28	.5000-28	.448	11.38	.663	16.84
9	1.073	27.25	.7500-28	.5625-24	.503	12.78	.719	18.26
10	1.138	28.91	.8125-28	.6250-24	.563	14.30	.778	19.76
12	1.338	33.96	1.0000-28	.6875-24	.653	16.59	.969	24.61
14	1.388	35.26	1.0625-20	.9375-20	.803	20.40	1.019	25.88
15	1.453	36.91	1.1250-28	.9375-20	.853	21.67	1.113	28.27

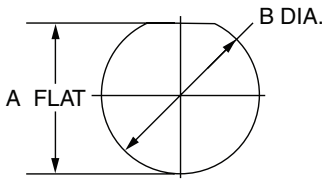

PANEL CUTOUT				
	A Flat		B Dia.	
Shell Size	in. ±.002	mm. ± 0.05	in. ±.005	mm. ± 0.13
5	.477	12.12	.510	12.95
6	.537	13.64	.573	14.55
7	.670	17.02	.698	17.73
8	.670	17.02	.698	17.73
9	.727	18.47	.760	19.30
10	.787	20.19	.823	20.90
12	.977	24.82	1.010	25.65
14	1.027	26.09	1.073	27.25
15	1.121	28.47	1.135	28.83

2M804 Push-Pull In-Line Receptacle

2M804-003-01 and 2M804-004-01

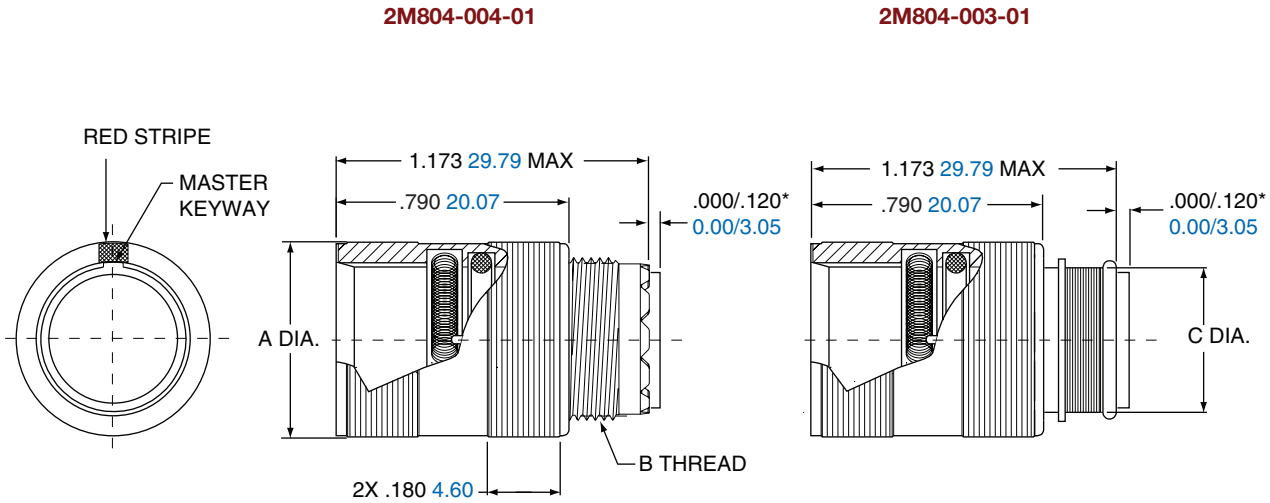

*Grommet protrudes for power/combo arrangements

Shell Size	A Dia.		B Thread UNEF-2A	C Dia.	
	in.	mm		in.	mm.
5	.453	11.51	.2500-32	.248	6.30
6	.523	13.28	.3125-32	.293	7.44
7	.583	14.81	.4375-28	.388	9.86
8	.606	15.39	.5000-28	.448	11.38
9	.698	17.73	.5625-24	.503	12.78
10	.738	18.75	.6250-24	.563	14.30
12	.883	22.43	.6875-24	.653	16.59
14	1.013	25.73	.9375-20	.803	20.40
15	1.061	26.95	.9375-20	.853	21.67

2M804 PCB/ Solder Rear Panel Jam Nut Recpt.

2M804-005-07 and 2M804-020-07

2M804-005-07
2M804-020-07

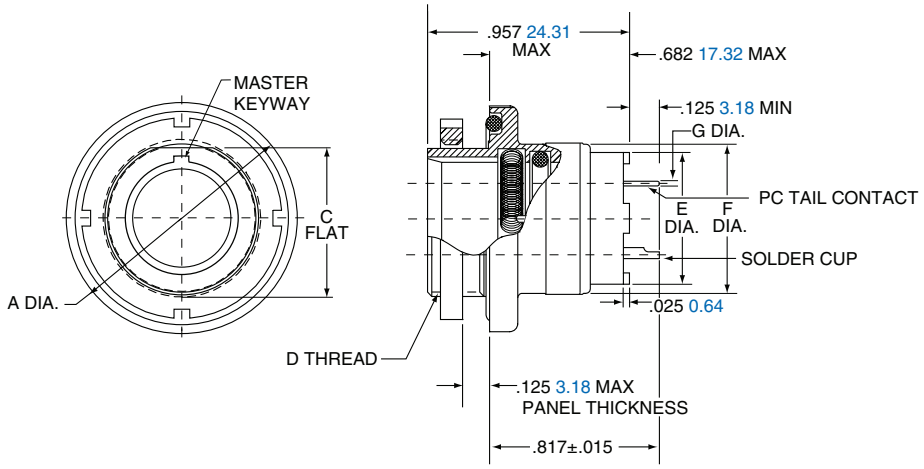

Shell Size	A Dia.		C Flat		D Thread UN-2A	E Dia.		F Dia.		G PC Tail Dia.
	in.	mm.	in.	mm.		in.	mm.	in.	mm.	
5	.773	19.63	.414	10.52	.4375-32	.274	6.96	.448	11.38	**#23** .018/.022 0.46/0.56
6	.833	21.16	.468	11.89	.5000-32	.329	8.36	.513	13.03	
7	.903	22.94	.593	15.06	.6250-28	.431	10.95	.573	14.55	**#20/20HD** .025/.027 0.64/0.69
8	.958	24.33	.593	15.06	.6250-28	.493	12.52	.596	15.14	
9	.998	25.35	.653	16.59	.6875-28	.551	14.00	.691	17.55	**#16** .060/.064 1.52/1.63
10	1.083	27.51	.721	18.31	.7500-28	.619	15.72	.728	18.49	
12	1.183	30.05	.843	21.41	.8750-28	.703	17.86	.883	22.43	
14	1.323	33.60	.968	24.59	1.0000-28	.863	21.92	1.003	25.48	**#12** .092/.096 2.34/2.44
15	1.373	34.87	1.036	26.31	1.0625-20	.913	23.19	1.063	27.00	

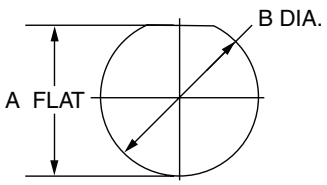

JAM NUT PANEL CUTOUT

Shell Size	A Flat		B Dia.	
	in. ±.002	mm. ± 0.05	in. ±.005	mm. ± 0.13
5	.423	10.74	.448	11.38
6	.475	12.07	.510	12.95
7	.602	15.29	.635	16.13
8	.602	15.29	.635	16.13
9	.663	16.84	.698	17.73
10	.729	18.82	.760	19.30
12	.851	21.62	.885	22.48
14	.976	24.79	1.010	25.65
15	1.043	26.49	1.073	27.25

2M804 PCB/ Solder Cup Jam Nut Front Panel

2M804-005-00 and 2M804-020-00

Micro38999

2M804-005-00
2M804-020-00

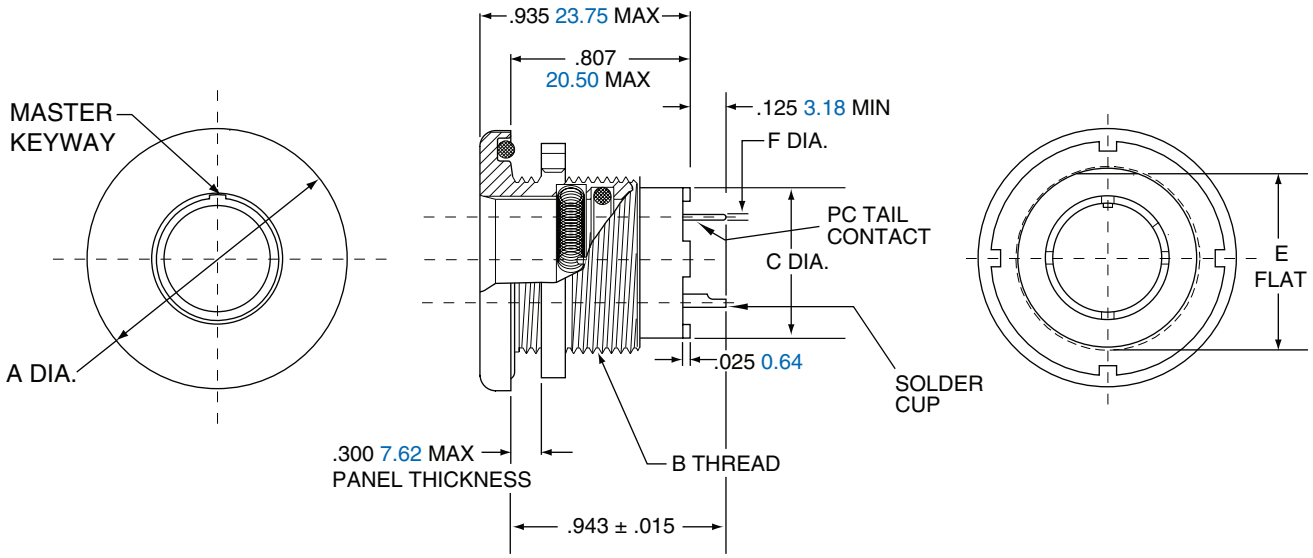

Shell Size	A Dia.		B Thread UN-2A	C Dia.		E Flat.		F Dia. Tail Dia.
	in.	mm.		in.	mm.	in.	mm.	
5	.830	21.08	.5000-32	.274	6.96	.470	11.94	**#23** .018/.022 0.46/0.56
6	.884	22.45	.5625-28	.329	8.36	.529	13.44	
7	.994	25.25	.6875-28	.431	10.95	.663	16.84	**#20/20HD** .025/.027 0.64/0.69
8	.994	25.25	.6875-28	.493	12.52	.663	16.84	
9	1.073	27.25	.7500-28	.551	14.00	.719	18.26	**#16** .060/.064 1.52/1.63
10	1.138	28.91	.8125-28	.619	15.72	.778	19.76	
12	1.338	33.99	1.0000-28	.703	17.86	.969	24.61	**#12** .092/.096 2.34/2.44
14	1.388	35.26	1.0625-20	.863	21.92	1.019	25.88	
15	1.453	36.91	1.1250-28	.913	23.19	1.113	28.27	

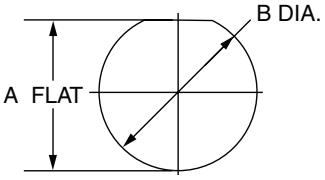

JAM NUT PANEL CUTOUT

Shell Size	A Flat		B Dia.	
	in. ±.002	mm. ± 0.05	in. ±.005	mm. ± 0.13
5	.477	12.12	.510	12.95
6	.537	13.64	.573	14.55
7	.670	17.02	.698	17.73
8	.670	17.02	.698	17.73
9	.727	18.47	.760	19.30
10	.787	20.00	.823	20.90
12	.977	24.82	1.010	25.65
14	1.027	26.10	1.073	27.75
15	1.121	28.47	1.135	28.83

2M804 Push-Pull Jam Nut Panel Mount Plug

2M804-009-07 and 2M804-021-07

2M804-009-07
2M804-021-07

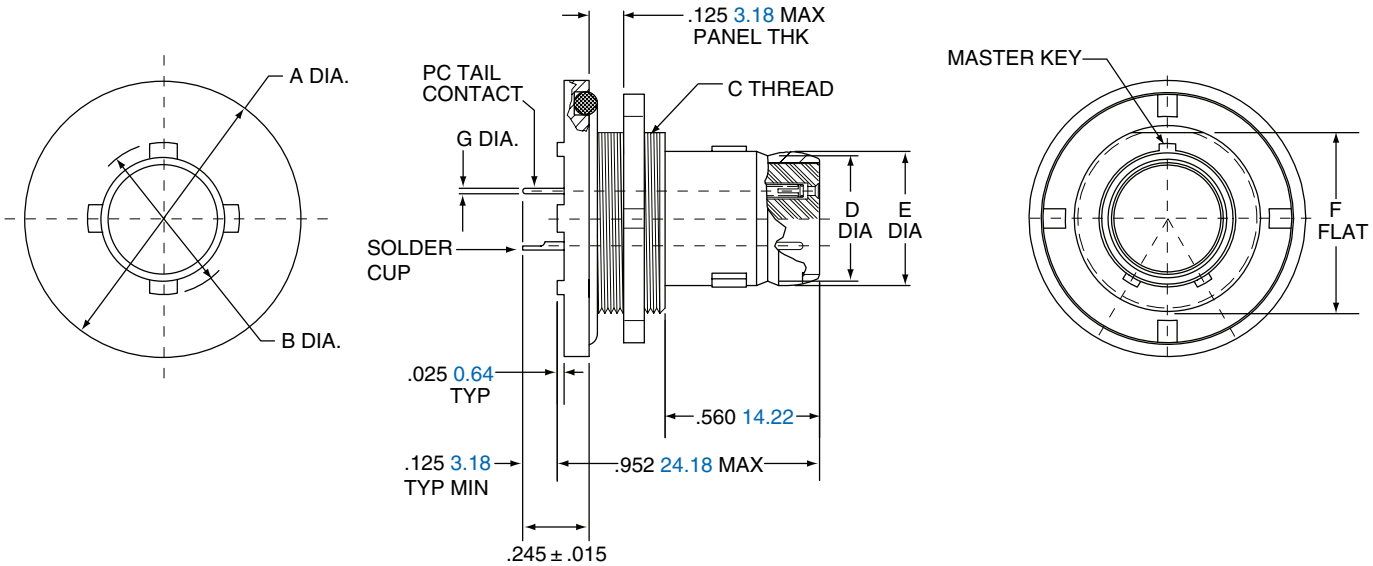

Shell Size	A Dia.		B Dia.		C Thread UN-2A	D Dia.		E Dia.		F Flat.		G PC Tail Dia.
	in.	mm.	in.	mm.		in.	mm.	in.	mm.	in.	mm.	
5	.773	19.63	.244	6.20	.4375-32	.218	5.54	.245	6.22	.414	10.52	**#23** .018/.022 0.46/0.56
6	.833	21.16	.330	8.38	.5000-32	.275	6.99	.310	7.87	.468	11.89	
7	.903	22.94	.432	10.97	.6250-28	.350	8.89	.378	9.60	.593	15.06	**#20/20HD** .025/.027 0.64/0.69
8	.958	24.33	.493	12.52	.6250-28	.395	10.03	.426	10.82	.593	15.06	
9	.998	25.35	.551	14.00	.6875-28	.450	11.43	.482	12.24	.653	16.59	**#16** .060/.064 1.52/1.63
10	1.083	27.51	.620	15.75	.7500-28	.525	13.34	.555	14.10	.721	18.31	
12	1.183	30.05	.703	17.86	.8750-28	.642	16.31	.672	17.07	.843	21.41	**#12** .092/.096 2.34/2.44
14	1.323	33.60	.863	21.92	1.0000-28	.761	19.33	.795	20.19	.968	24.59	

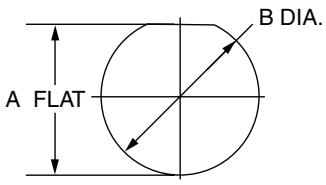

JAM NUT PANEL CUTOUT

Shell Size	A Flat in. ±.002	A Flat mm. ± 0.05	B Dia. in. ±.005	B Dia. mm. ± 0.13
5	.423	10.74	.448	11.38
6	.475	12.07	.510	12.95
7	.602	15.29	.635	16.13
8	.602	15.29	.635	16.13
9	.663	16.84	.698	17.73
10	.729	18.82	.760	19.30
12	.851	21.62	.885	22.48
14	.976	24.79	1.010	25.65

2M804 Push-Pull Jam Nut Front Panel Mount Plug

2M804-009-00 and 2M804-021-00

Micro38999

2M804-009-00
2M804-021-00

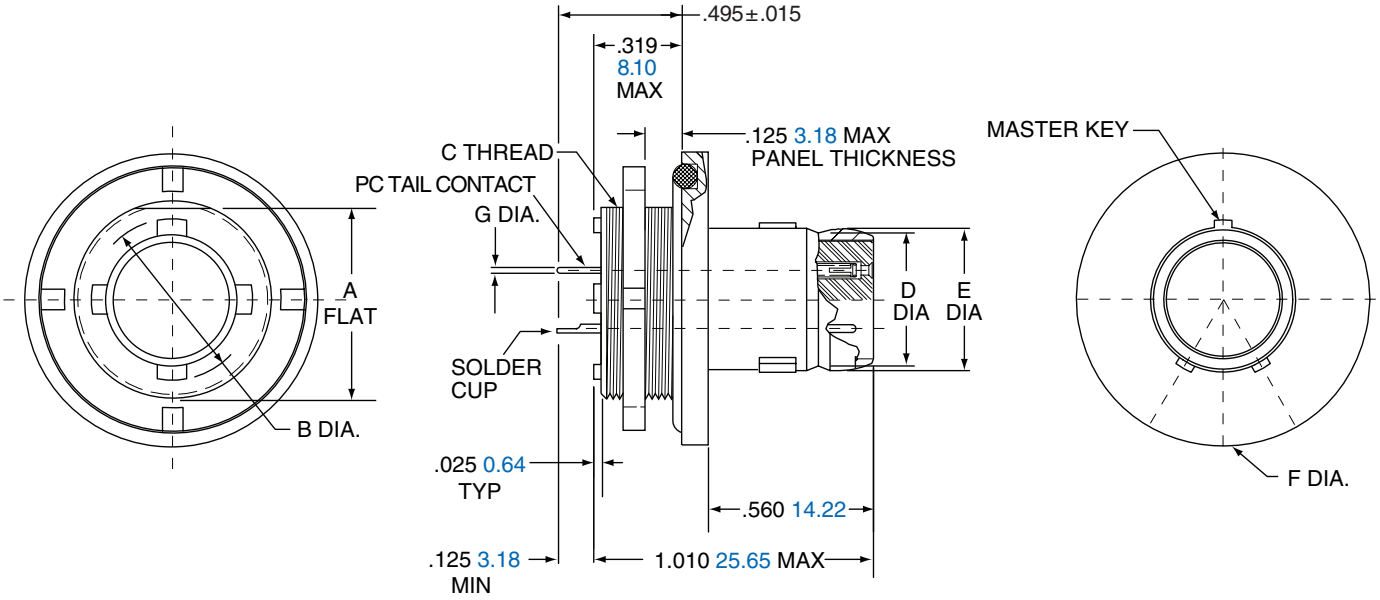

Shell Size	A Flat.		B Dia.		C Thread UN-2A	D Dia.		E Dia.		F Dia.		G PC Tail Dia.
	in.	mm.	in.	mm.		in.	mm.	in.	mm.	in.	mm.	
5	.414	10.52	.244	6.20	.4375-32	.218	5.54	.245	6.22	.773	19.63	**#23** .018/.022 0.46/0.56
6	.468	11.89	.330	8.38	.5000-32	.275	6.99	.310	7.87	.833	21.16	
7	.593	15.06	.432	10.97	.6250-28	.350	8.89	.378	9.60	.903	22.94	**#20/20HD** .025/.027 0.64/0.69
8	.593	15.06	.493	12.52	.6250-28	.395	10.03	.426	10.82	.958	24.33	
9	.653	16.59	.551	14.00	.6875-28	.450	11.43	.482	12.24	.998	25.35	**#16** .060/.064 1.52/1.63
10	.721	18.31	.620	15.75	.7500-28	.525	13.34	.555	14.10	1.083	27.51	
12	.843	21.41	.703	17.86	.8750-28	.642	16.31	.672	17.07	1.183	30.05	**#12** .092/.096 2.34/2.44
14	.968	24.59	.863	21.92	1.0000-28	.761	19.33	.795	20.19	1.323	33.60	

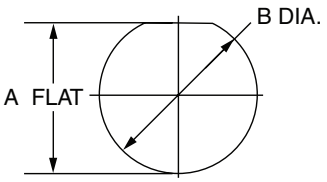

JAM NUT PANEL CUTOUT

Shell Size	A Flat		B Dia.	
	in. ±.002	mm. ± 0.05	in. ±.005	mm. ± 0.13
5	.423	10.74	.448	11.38
6	.475	12.07	.510	12.95
7	.602	15.29	.635	16.13
8	.602	15.29	.635	16.13
9	.663	16.84	.698	17.73
10	.729	18.82	.760	19.30
12	.851	21.62	.885	22.48
14	.976	24.79	1.010	25.65

2M804 Push-Pull Flange Panel Mount Plug

2M804-009-02 and 2M804-021-02

2M804-009-02
2M804-021-02

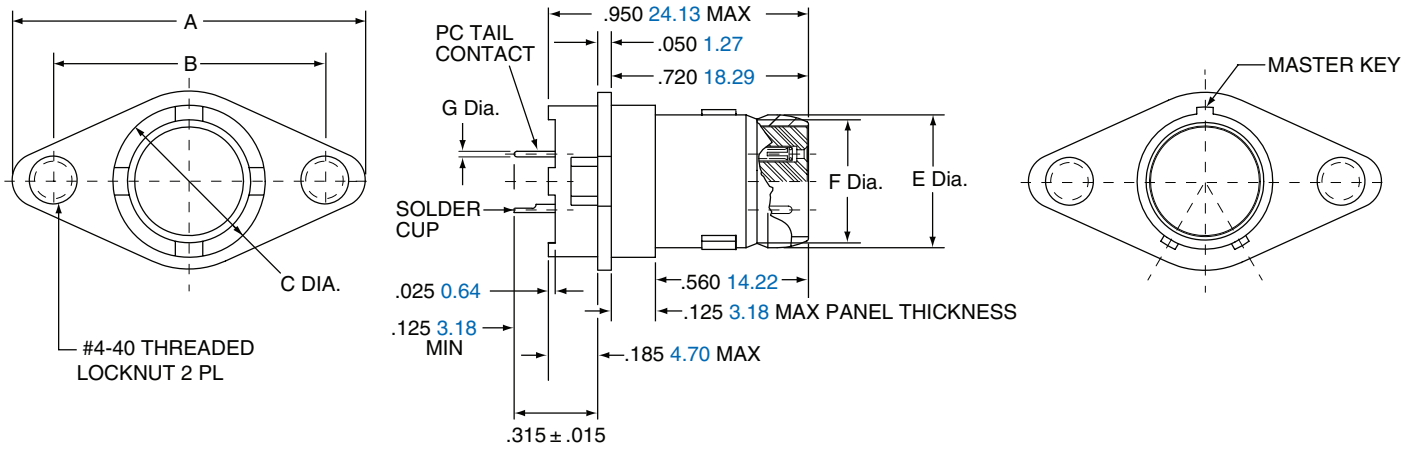

Shell Size	A		B		C Dia.		E Dia.		F Dia		G PC Tail Dia.
	in.	mm.	in. ± .005	mm. ± 0.13	in.	mm.	in.	mm.	in.	mm.	
5	1.055	26.80	.755	19.18	.323	8.20	.245	6.22	.218	5.54	**#23** .018/.022 0.46/0.56
6	1.120	28.45	.820	20.83	.388	9.86	.310	7.87	.275	6.99	
7	1.185	30.10	.885	22.48	.453	11.51	.378	9.60	.350	8.89	**#20/20HD** .025/.027 0.64/0.69
8	1.230	31.24	.930	23.62	.498	12.65	.425	10.80	.395	10.03	
9	1.290	32.77	.990	25.15	.558	14.17	.482	12.24	.450	11.43	**#16** .060/.064 1.52/1.63
10	1.360	34.54	1.060	26.92	.628	15.95	.555	14.10	.525	13.34	
12	1.485	37.72	1.185	30.10	.753	19.13	.672	17.07	.642	16.31	**#12** .092/.096 2.34/2.44
14	1.600	40.64	1.300	33.02	.868	22.05	.795	20.19	.761	19.33	

2M804 Jam Nut, Rear Panel Mount Double Flange

2M804-025-07

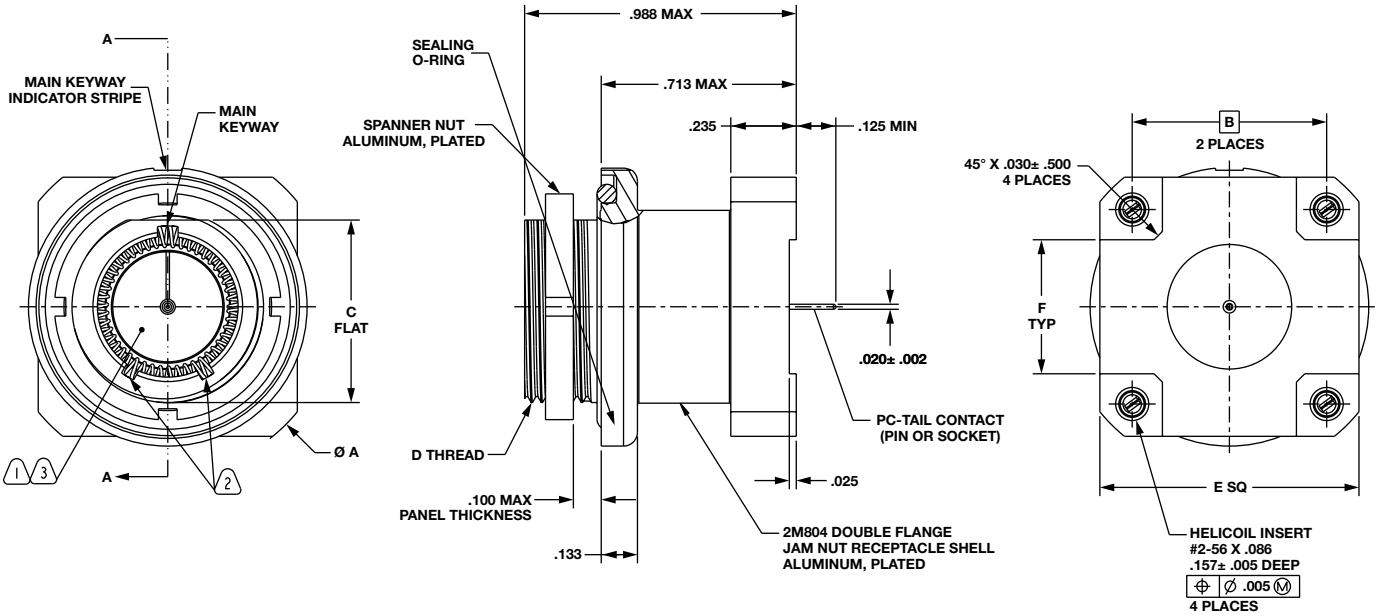

Shell Size	A Flat.		B		C Flat		D Thread UN-2A	F Type	
	in.	mm.	in.	mm.	in.	mm.		in.	mm.
5	.973	24.71	.496	12.59	.415	10.54	.4375-32	.273	6.93
6	1.033	26.24	.540	13.72	.467	11.86	.5000-32	.318	8.07
7	1.110	28.19	.611	15.52	.594	15.09	.6250-28	.388	9.85
8	1.155	29.34	.630	16.00	.594	15.09	.6250-28	.408	10.36
9	1.200	30.48	.698	17.73	.655	16.63	.6875-28	.475	12.06
10	1.285	32.63	.750	19.05	.721	18.31	.7500-28	.528	13.41
12	1.390	35.30	.815	20.70	.843	21.41	.8750-28	.593	15.06
14	1.525	38.73	.925	23.49	.968	24.59	1.0000-28	.702	17.83
1	1.573	39.95	.964	24.48	1.036	26.31	1.0625-20	.742	18.85

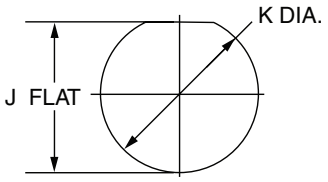

REAR MOUNT PANEL CUTOUT

Shell Size	K DIA.		J FLAT	
	in. ±.002	mm. ± 0.05	in. ±.005	mm. ± 0.13
5	.448	11.37	.425	10.79
6	.510	12.95	.477	12.11
7	.635	16.13	.604	15.34
8	.635	16.13	.604	15.34
9	.695	17.65	.665	16.89
10	.760	19.30	.731	18.56
12	.885	22.48	.853	21.66
14	1.010	25.65	.978	24.84
15	1.073	27.25	1.046	26.56

2M804 Push-Pull Receptacles Protection Caps

Ordering Guide for 2M667-202

2M804 Push-Pull Protective Caps are available in plug and receptacle versions. Protective caps keep the connector interface dry and clean while not in use. Caps come in a variety of materials, lanyard styles and lengths to accommodate specific design requirements.

1. SERIES	2. SERVICE CLASS	3. SHELL SIZE	4. ATTACH-MENT TYPE	5. ATTACHMENT LENGTH IN INCHES	6. ATTACHMENT CODE	7. PULL RING OPTION
2M667-202	-M	9	-G	-5	04	R

1. SERIES

Part #	Description
2M667-202	Protection Caps 2M804 Receptacles

4. ATTACHMENT TYPE

	Part #	Description
	-G	Nylon Rope
	-H	Stainless Steel Wire Rope, Teflon® Jacket
	-N	No Attachment
	-S	Stainless Steel Sash Chain
	-SK	Nylon Rope With Slip Knot
	-T	Stainless Steel Wire Rope, No Jacket
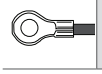	-U	Stainless Steel Wire Rope, Polyurethane Jacket

5. ATTACHMENT LENGTH IN INCHES

-5	Inch Length

Omit for attachment Type N (No Attachment) Example "-5" equals five inch length

2. SERVICE CLASS

Material	Part #	Description	RoHS
Aluminum	-C	Black Anodized (Non-conductive)	✓
	-M	Electroless Nickel	✓
	-NF	Olive Drab Cadmium	
	-MT	Durmalon (Ni PTFE)	✓
	-ZN	Olive Drab Zinc Nickel	✓
	-ZNU	Black Zinc Nickel	✓
Stainless Steel	-Z1	Passivated	✓
	-ZL	Electrolytic Nickel	✓

6. ATTACHMENT CODE

Omit for attachment Types N (No Attachment) and SK (Slip Knot)

	Small Ring	01 –.126 (3.20) I.D.
		02 –.145 (3.68) I.D.
		04 –.188 (4.78) I.D.
		06 –.197 (5.00) I.D.
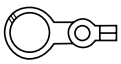	Large Ring	14 –.385 (9.78) I.D.
		15 –.445 (11.30) I.D.
		16 –.570 (14.48) I.D.
		17 –.635 (16.13) I.D.
		18 –.695 (17.65) I.D.
		19 –.885 (22.48) I.D.
		20 –1.070 (27.17) I.D.
		21 –1.135 (28.83) I.D.
		25 –1.530 (38.86) I.D.
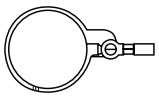	Split Ring	50 –.420 (10.67) I.D.
		52 –.480 (12.19) I.D.
		54 –.635 (16.13) I.D.
		56 –.745 (18.92) I.D.
		58 –.885 (22.48) I.D.
		60 –1.010 (25.65) I.D.
		64 –1.125 (28.58) I.D.
		68 –1.345 (34.16) I.D.

3. SHELL SIZE

5
6
7
8
9
10
12
14

7. PULL RING OPTION

R	Supplied with Pull Ring
	Omit for None

Assembly Instructions for Protection Cap, see page 100.

2M804 Push-Pull Plug Protection Caps

Ordering Guide for 2M809-198

1. SERIES	2. SERVICE CLASS	3. SHELL SIZE	4. ATTACHMENT TYPE	5. ATTACHMENT LENGTH IN INCHES	6. ATTACHMENT CODE
2M809-198	-M	9	-G	-5	04

1. SERIES

Part #	Description
2M809-198	Protection Caps 2M804 Plug

2. SERVICE CLASS

Material	Part #	Description	RoHS
Aluminum	-C	Black Anodized (Non-conductive)	✓
	-M	Electroless Nickel	✓
	-NF	Olive Drab Cadmium	
	-MT	Durmalon (Ni PTFE)	✓
	-ZN	Olive Drab Zinc Nickel	✓
	-ZNU	Black Zinc Nickel	✓
Stainless Steel	-Z1	Passivated	✓
	-ZL	Electrolytic Nickel	✓

3. SHELL SIZE

5
6
7
8
9
10
12
14

4. ATTACHMENT TYPE

	Part #	Description
	-G	Nylon Rope
	-H	Stainless Steel Wire Rope, Tef-lon® Jacket
	-N	No Attachment
	-S	Stainless Steel Sash Chain
	-SK	Nylon Rope With Slip Knot
	-T	Stainless Steel Wire Rope, No Jacket
	-U	Stain-less Steel Wire Rope, Polyurethane Jacket

5. ATTACHMENT LENGTH IN INCHES

-5	Inch Length

Omit for attachment Type N (No Attachment) Example "-5" equals five inch length

6. ATTACHMENT CODE

	Omit for attachment Types N (No Attachment) and SK (SlipKnot)	For Shell Size
Small Ring	01 –.126 (3.20) I.D.	
	02 –.145 (3.68) I.D.	
	04 –.188 (4.78) I.D.	
	06 –.197 (5.00) I.D.	
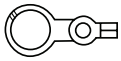 Large Ring	16 –.570 (14.48) I.D.	5
	17 –.635 (16.13) I.D.	6
	18 –.695 (17.65) I.D.	7,8
	19 –.885 (22.48) I.D.	9
	20 –1.070 (27.17) I.D.	10,12
	21 –1.135 (28.83) I.D.	14,15
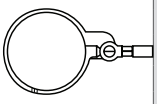 Split Ring	50 –.420 (10.67) I.D.	
	52 –.480 (12.19) I.D.	
	54 –.635 (16.13) I.D.	
	56 –.745 (18.92) I.D.	
	58 –.885 (22.48) I.D.	
	60 –1.010 (25.65) I.D.	
	64 –1.125 (28.58) I.D.	
	68 –1.345 (34.16) I.D.	

6. ADDITIONAL ATTACHMENT CODE

Omit for attachment Types N (No Attachment) and SK (Slip Knot)

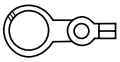 Large Ring	14 –.385 (9.78) I.D.
	15 –.445 (11.30) I.D.
	22 –1.210 (11.30) I.D.
	23 –1.275 (11.30) I.D.
	24 –1.375 (20.8) I.D.
	25 –1.530 (38.86) I.D.

Assembly Instructions for Protection Cap, see page 100.

2M804 Push-Pull Protection Cap

Metal Protection Cap 2M809-198 and 2M667-202

2M809-198

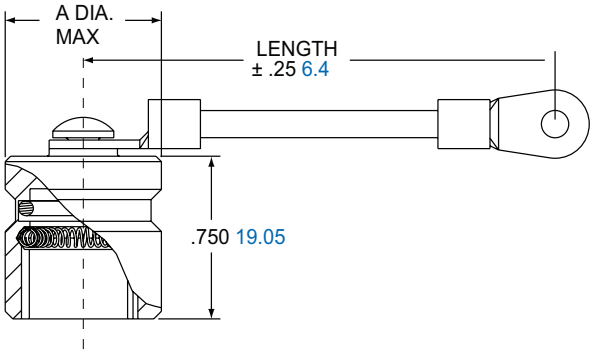

2M667-202

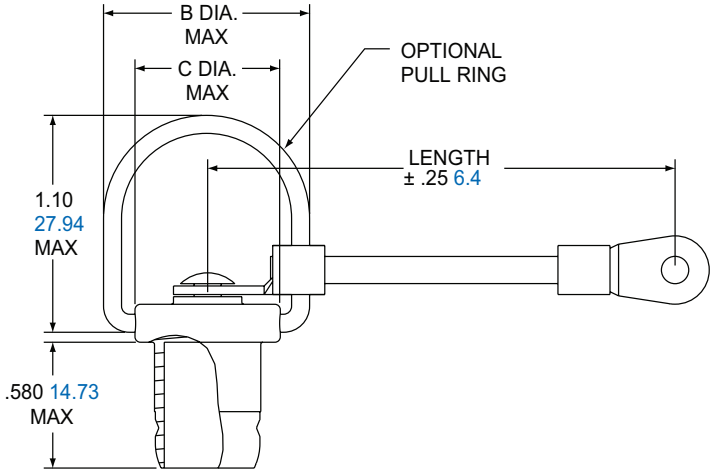

Shell Size	A Max.		B Max.		C Max.	
	in.	mm.	in.	mm.	in.	mm.
5	.483	12.27	.720	18.29	.498	12.65
6	.533	13.54	.720	18.29	.503	12.78
7	.633	16.08	.800	20.32	.578	14.68
8	.658	16.71	.850	21.59	.627	15.93
9	.708	17.98	.900	22.86	.678	17.22
10	.783	19.89	1.010	25.65	.791	20.09
12	.908	23.06	1.090	27.69	.868	22.05
14	1.033	26.24	1.210	30.73	.988	25.10
15	1.083	27.51	1.260	32.00	1.038	26.37

MATERIALS AND FINISHES	
Cover	Aluminum alloy or stainless steel
O-Ring	Fluorosilicone rubber
Wire, Hardware	Stainless steel, passivated

2M804 Push-Pull Plug Rubber Caps

Ordering Guide for 2M809-083 and 2M809-087

Micro38999

Push-Pull Rubber Protective Caps can be used on the 2M804 push-pull plugs and receptacles. These molded rubber covers are ideal for a protective splash-proof option.

1.	2.	3.	4.	5.	6.
SERIES	**SHELL SIZE**	**ATTACH-MENT TYPE**	**LANYARD LENGTH**	**ATTACHMENT CODE**	**CONDUCTIVE RUBBER**
2M809-083	**-6**	**G**	**5**	**-04**	**C**

1. SERIES

Part #	Description
2M809-083	Protection Caps 2M804 Plug
2M809-087	Protection Caps 2M804 Receptacles

2. SHELL SIZE

-5
-6
-7
-8
-9
-10
-12
-14

3. ATTACHMENT TYPE

G	Nylon Rope
N	No Attachment

4. LANYARD LENGTH

5	Inch length
Example "-5" equals five inch length	

5. ATTACHMENT CODE

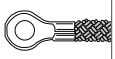		**-WS**	Nylon Cable tie, 1.77 Inch (45mm) Maximum Wire Bundle Diameter
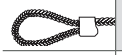		**-SK**	Slip Knot
		-00	Lanyard with no attachment (fused End)
	SMALL RING	**-01**	–.147 (3.73) I.D.
		-02	–.147 (3.73) I.D.
		-04	–.173 (3.94) I.D.
		-06	–.197 (5.00) I.D.

				For Shell Size
	LARGE RING	**-16**	–.570 (14.48) I.D.	5
		-17	–.635 (16.13) I.D.	6
		-18	–.695 (17.65) I.D.	7,8
		-19	–.885 (22.48) I.D.	9
		-20	–1.070 (27.18) I.D.	10,12
		-21	–1.135 (28.83) I.D.	14,15

5. ADDITIONAL ATTACHMENT CODE

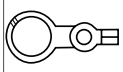	**Large Ring**	**-07**	–.385 (9.78) I.D.
		-08	–.510 (13.11) I.D.
		-09	–.583 (14.81) I.D.
		-10	–.766 (19.4) I.D.
		-11	–.896 (25.76) I.D.
		-12	–1.015 (25.78) I.D.
		-14	–.385 (9.78) I.D.
		-15	–.445 (11.30) I.D.
		-22	–1.210 (11.30) I.D.
		-23	–1.275 (11.30) I.D.
		-24	–1.375 (20.8) I.D.

6. CONDUCTIVE RUBBER

Omit for Standard Neoprene

C	Conductive Rubber

Assembly Instructions for Protection Cap, see page 100.

2M804 Push-Pull Plug Rubber Caps

Rubber Caps 2M809-083 and 2M809-087

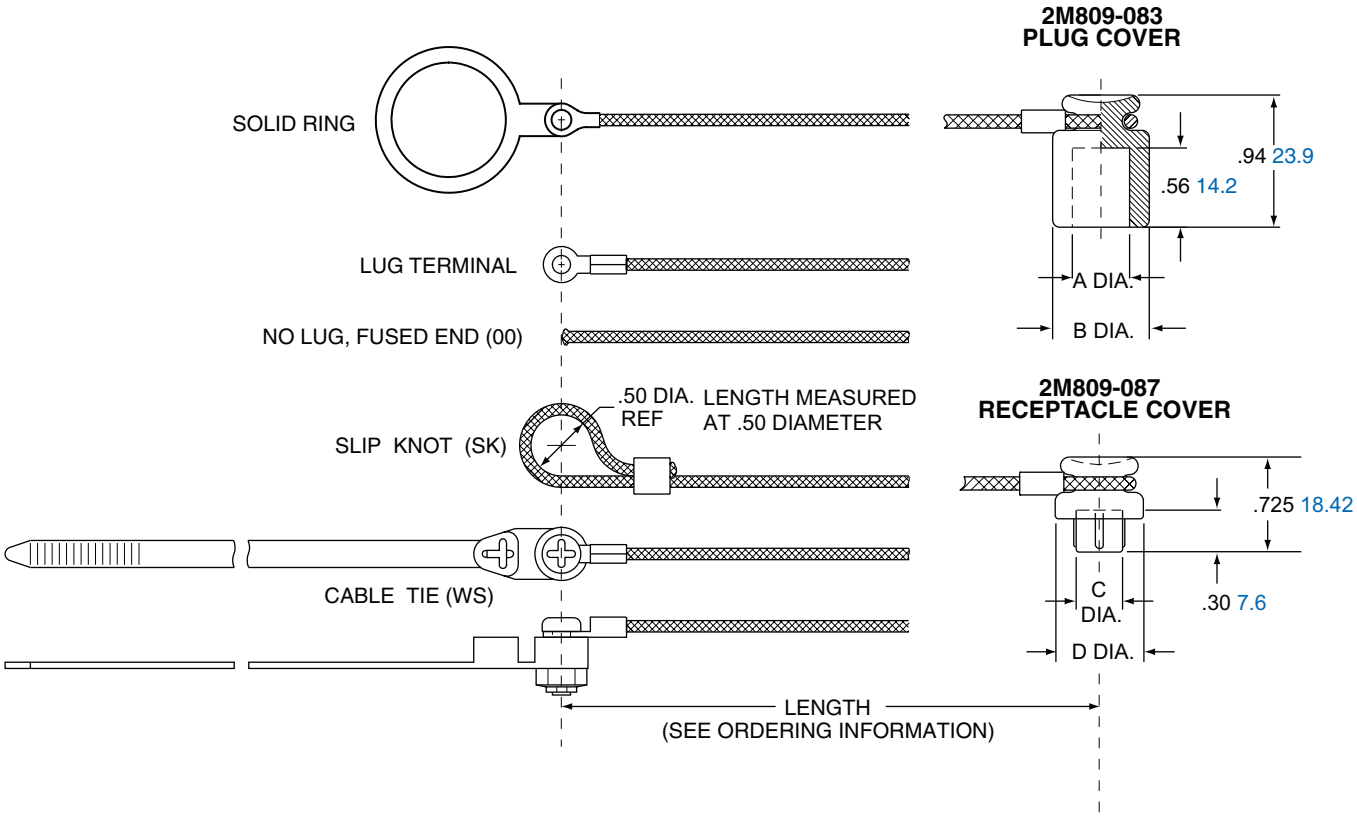

Shell Size	A Dia.		B Dia.		C Dia.		D Dia.	
	in.	mm.	in. ± .005	mm. ± 0.13	in.	mm.	in.	mm.
5	.230	5.84	.560	14.22	.293	7.44	.638	16.21
6	.290	7.37	.560	14.22	.358	9.09	.700	17.78
7	.360	9.14	.560	14.22	.418	10.62	.825	20.96
8	.410	10.41	.680	17.27	.473	12.01	.825	20.96
9	.460	11.68	.680	17.27	.526	13.36	.888	22.56
10	.540	13.72	.790	20.07	.603	15.32	.950	24.13
12	.650	16.51	.790	20.07	.724	18.39	1.075	27.31
14	.780	19.81	1.110	28.19	.845	21.46	1.200	30.48
15	.845	21.46	1.110	28.19	.900	22.86	1.325	33.66

MATERIALS	
Cover	Neoprene rubber blend, black
Lanyard	.062" (1.57) diameter nylon cord, black
Cable Tie	6/6 nylon, black SST locking tab
Ring	Stainless steel

2M803 1/4 Turn Bayonet Coupling

Introduction and Specifications

Micro38999

Page Guide

Order E-59
Weight E-60
Plugs E-61
Jam Nut E-62
Flange Mount E-63
In-Line E-64
PCB/ Flange Mt. & Jam Nut E-65
Protection Caps E-66-67

Amphenol's 2M Micro38999 Connector Series… The New Aerospace Standard

Averaging less than half the size and weight of their 38999 ancestors, Amphenol's 2M Micro38999 series are an easy and inexpensive way to take weight out of your system. 2M meet or exceed most environmental and performance requirements listed in MIL-DTL-38999, so modernizing your equipment doesn't mean sacrificing ruggedness. With almost 2,000,000 configurations in every termination style and a full complement of accessories available right out of the catalog, customization has never been easier. Smarter, faster and smaller: Amphenol's 2M… the only connector you'll ever need.

2M803 Features

- Bayonet Coupling
- Quickest turn-mating of the 2M series
- 1,000 mating cycles
- Lightest of the 2M series

Why 2M803?

2M803 connectors are very light; and their fast, sure-mate bayonet coupling make them the perfect choice for light duty applications that require frequent disconnect. Their small size and easy decoupling also make them the connector of choice for customers who have hard-to-reach panels. Unlike their other 2M counterparts, 2M803 connectors are not rated for immersion, and are recommended for general purpose connections that will not be exposed to the elements for very long.

2M803 VS 38999

SPECIFICATION	2M803	MIL-DTL-38999 SERIES II
Signal Count	1 to 55	1 to 187
Insulation Resistance	5,000 megaohms min	5,000 megaohms min
Operating Temperature	-65°C to +175°C	-65°C to +175°C
Shock	300 G ± 15	300 G ± 15
Vibration	"37.0 G Random 30.0 G Sine"	N/A
Shielding Effectiveness	"40 dB min. from 100 MHz to 1000 MHz"	"45 dB min. from 100 MHz to 1000 MHz"
Durability	2,000 mating cycles min.	500 mating cycles
Shell to Shell Conductivity	100 mV drop max	200 mV drop max
Contacts	Per AS39029	Per AS39029

2M803 MATERIALS AND FINISHES

Shells	Aluminum Alloy or Stainless Steel
Contacts	Copper Alloy, gold plated
Insulators	Polyphenylene Sulfide (PPS)
Contact Retention	Beryllium Copper Alloy
Grommet, Interfacial Seal, O-Ring	Fluorosilicone Rubber

2M803 1/4 Turn Bayonet Coupling

Ordering Guide for 2M803 Crimp Receptacles & Plugs

1. SERIES	2. SHELL STYLE	3. SERVICE CLASS	4. SHELL SIZE-INSERT AGGMT	5. CONTACTS	6. KEYING
2M803-00X	-06	NF	6-7	P	N

1. SERIES

Type	PartPCB	Description
CRIMP	**PLUGS**	
	2M803-001	Plug with Integral Backshell
	2M803-002	Plug with Accessory Threads
	RECEPTACLE	
	2M803-003	Receptacle with Integral Backshell
	2M803-004	Receptacle with Accessory Threads
PCB/SOLDER RECEPTACLES		
PCB/ SOLDER	2M803-005	Receptacle for Solder Cup or PCB Termination, with Standard Epoxy Potting
	2M803-015	Receptacle with Solder Cup or PCB Termination with Special Sealing for Open Face (unmated) Water Immersion Requirements. 100% Leak Tested. To maintain a helium leak rate of $1x10^{-4}$ cc/sec. pressure differential from -65°C to 175°C.

2. SHELL STYLE

Part #	Desciption
PLUGS	
-06	Anti-Decoupling
RECEPTACLES	
-07	Jam Nut*
-01	In-Line
-02	Flange Mount
PCB/SOLDER RECEPTACLES	
-02	Flange Mount
-07	Jam Nut*

*add "-501" as a suffix to the Jam Nut Part number to include a Hex Nut instead of a Spanner Nut.

3. SERVICE CLASS

Material	Part #	Description	RoHS
ALUMINUM	C	Anodized (Non-conductive)	✓
	M	Electroless Nickel	✓
	NF	Olive Drab Cadmium	
	MT	Durmalon (Ni PTFE)	✓
	ZN	Olive Drab Zinc Nickel	✓
	ZNU	Black Zinc Nickel	✓
	BEN	Black Electroless Nickel	✓
STAINLESS STEEL	Z1	Passivated	✓
	ZL	Electrolytic Nickel	✓

4. SHELL SIZE-INSERT ARRANGEMENT

See Table on pages 7-20

5. CONTACTS

Style	Part #	Description
CRIMP	P	Pin
	S	Socket
	A	Pin-Less Contacts
	B	Socket-Less Contacts
PCB/SOLDER RECEPTACLES		
PCB/ SOLDER	P	Pin-PCB
	S	Socket-PCB
	E	Pin-Solder Cup
	F	Socket-Solder Cup

6. KEYING

Part #	A°	B°
N	150°	210°
X	75°	210°
Y	95°	230°
Z	140°	275°

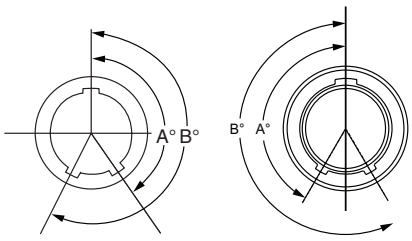

Receptacle View Plug View

For additional assistance building a part number and for 3D models, please visit www.amphenol-aerospace.com to access our 2M configurator.

2M803 1/4 Turn Bayonet Coupling

Weights

SERIES 2M803 MAXIMUM CONNECTOR WEIGHT IN GRAMS					
Insert Arrangements	Cable Plug	Jam Nut Receptacle Crimp	Jam Nut Receptacle PCB	Flange Receptacle Crimp	Flange Receptacle PCB
5-3P	3.6	3.6	3.9	2.9	3.3
5-3S	3.7	3.7	4.0	3.1	3.4
6-1P	4.4	4.4	4.6	3.1	3.5
6-1S	4.5	4.5	4.7	3.2	3.6
6-4P	4.7	3.7	4.1	3.1	3.6
6-4S	4.7	4.0	4.2	3.2	3.7
6-7P	5.1	4.8	5.3	3.3	4.4
6-7S	5.1	5.1	5.5	3.6	4.4
7-1P	5.7	5.9	5.8	4.4	4.7
7-1S	5.9	6.2	5.9	4.7	5.1
7-10P	6.9	7.4	8.1	5.0	6.5
7-10S	7.4	7.8	8.4	5.4	6.6
8-2P	8.6	8.9	9.9	6.6	8.6
8-2S	9.4	9.7	10.7	7.4	9.4
8-13P	7.9	8.3	9.2	5.9	7.9
8-13S	8.7	8.9	9.7	6.6	8.1
8-200P	8.9	9.2	10.2	6.9	8.9
8-200S	9.6	9.9	10.9	6.9	9.6
9-4P	9.2	9.6	10.6	6.6	9.2
9-4S	9.6	9.9	10.9	6.9	9.6
9-19P	9.2	9.1	10.6	7.0	9.9
9-19S	10.2	10.1	11.2	8.1	10.2
9-200P	9.1	9.5	10.5	7.2	9.1
9-200S	10.2	10.6	11.6	8.3	10.2
9-201P	9.2	9.6	10.6	7.3	10.3
9-201S	9.8	10.1	11.7	8.4	10.3
10-5P	13.4	14.1	15.0	10.6	13.9
10-5S	14.9	15.5	17.5	12.0	15.3
10-26P	11.7	12.3	14.3	8.8	12.8
10-26S	13.4	13.6	15.1	10.1	13.1
10-200P	12.5	13.2	15.2	9.7	13.0
10-200S	14.0	14.6	16.6	11.1	14.4
10-201P	12.9	13.5	15.5	10.0	13.3
10-201S	14.4	15.1	17.1	11.6	14.9
10-202P	12.4	13.1	15.1	9.6	11.8
10-202S	14.0	14.6	16.6	11.1	14.4
12-2P	15.5	16.4	19.1	11.4	16.9
12-2S	17.2	18.0	20.8	13.1	18.6
12-3P	16.5	17.4	20.1	12.4	17.9
12-3S	18.3	19.1	21.9	14.2	19.7
12-7P	16.7	17.6	20.4	12.7	18.2
12-7S	19.4	20.2	23.0	15.3	20.8
12-37P	15.0	15.8	18.6	10.9	16.4
12-37S	16.6	17.5	19.6	12.4	16.7
12-200P	15.6	16.5	19.3	11.6	17.1
12-200S	17.9	18.8	21.6	13.9	19.4
12-201P	15.7	16.6	19.4	11.7	17.2
12-201S	18.2	19.0	21.8	14.1	19.6
14-5P	22.2	23.5	27.7	17.3	25.5
14-5S	24.8	26.1	29.3	19.8	25.1
14-55P	19.6	20.9	25.1	14.6	22.9
14-55S	22.6	23.9	27.1	14.6	23.9

2M803 1/4 Turn Bayonet Coupling Plug

2M803-001-06 and 2M803-002-06

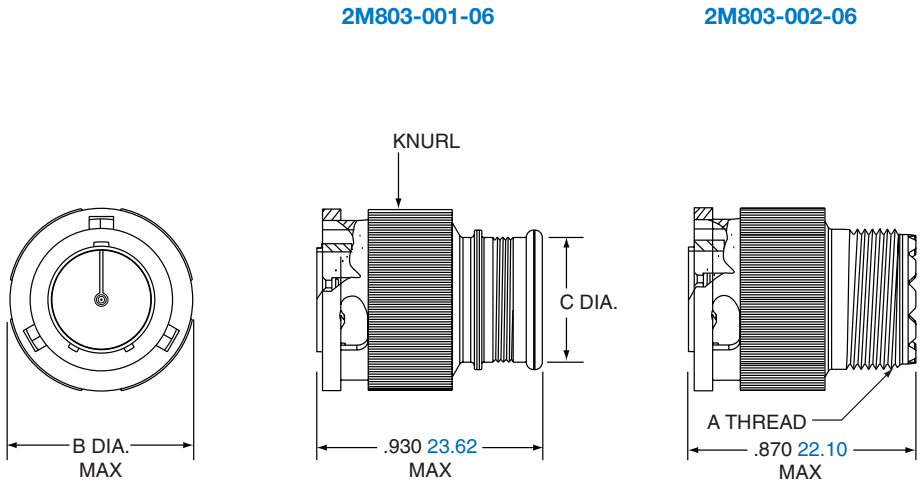

Shell Size	A Thread UNEF-2A	B Dia. Max		C Dia.	
		in.	mm.	in.	mm.
5	.2500-32	.475	12.07	.245	6.22
6	.3125-32	.540	13.72	.290	7.37
7	.4375-28	.620	15.75	.390	9.91
8	.5000-28	.675	17.15	.450	11.43
9	.5625-24	.745	18.92	.500	12.70
10	.6250-24	.812	20.63	.562	14.28
12	.6875-24	.894	22.71	.650	16.51
14	.9375-20	1.060	26.92	.800	20.32
15	.9375-20	1.120	28.45	1.035	26.29

2M803 1/4 Turn Bayonet Coupling Jam Nut

2M803-003-07 and 2M803-004-07

Micro38999

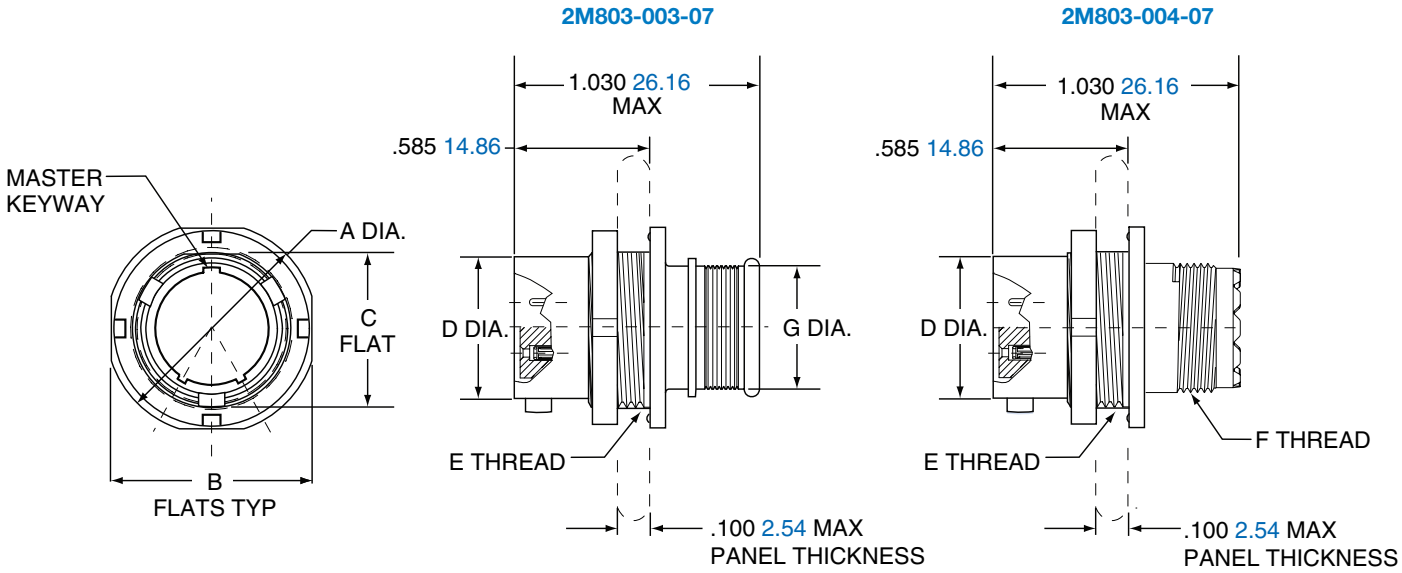

Shell Size	A Dia.		B Flat		C Flat		D Dia.		E Thread	F Thread	G Dia.	
	in.	mm	in.	mm.	in.	mm	in.	mm.			in.	mm.
5	.575	14.61	.545	13.84	.350	8.89	.300	7.62	.3750-32 UNEF-2A	.2500-32 UNEF-2A	.245	6.30
6	.635	16.13	.595	15.11	.410	10.41	.362	9.19	.4375-28 UNEF-2A	.3125-32 UNEF-2A	.290	7.44
7	.755	19.18	.723	18.36	.536	13.61	.436	11.07	.5625-32 UN-2A	.4375-28 UNEF-2A	.390	9.86
8	.830	21.08	.790	20.11	.593	15.10	.498	12.65	.6250-28 UN-2A	.5000-28 UNEF-2A	.450	11.38
9	.830	21.08	.790	20.07	.596	15.14	.561	14.25	.6250-28 UN-2A	.5625-24 UNEF-2A	.500	12.78
10	.955	24.26	.925	23.51	.721	18.31	.635	16.13	.7500-28 UN-2A	.6250-24 UNEF-2A	.562	14.30
12	1.078	27.38	1.044	26.52	.845	21.46	.714	18.14	.8750-28 UN-2A	.6875-24 UNEF-2A	.650	16.71
14	1.264	32.11	1.230	31.24	1.022	25.96	.865	21.97	1.0625-20 UN-2A	.9375-20 UNEF-2A	.805	20.40
15	1.322	33.58	1.287	32.69	1.093	27.76	.924	23.47	1.1250-28 UN-2A	.9375-20 UNEF-2A	.850	21.67

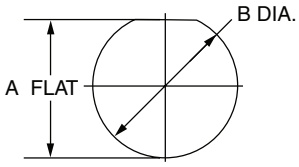

PANEL CUTOUT FOR JAM NUT RECEPTACLE

Shell Size	A Flat		B Dia	
	in. ±.002	mm. ± 0.05	in.	mm.
5	.355	9.02	.382	9.70
6	.415	10.54	.445	11.30
7	.541	13.74	.572	14.53
8	.601	15.27	.635	16.13
9	.601	15.27	.643	16.33
10	.729	18.52	.760	18.29
12	.850	21.59	.885	22.48
14	1.031	23.19	1.072	27.23

2M803 Bayonet Coupling Flange Mount

2M803-003-02 and 2M803-004-02

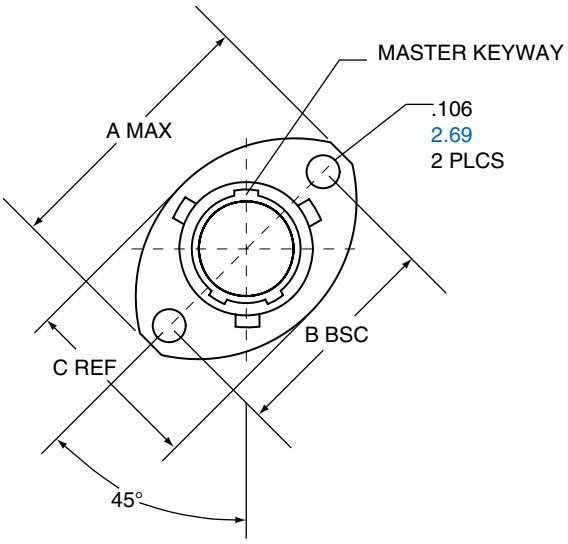

2M803-003-02

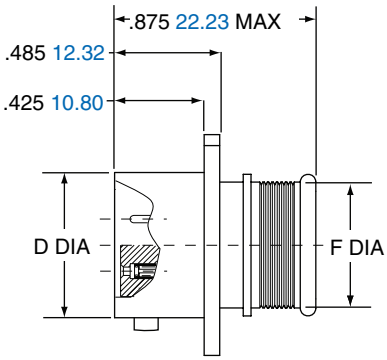

2M803-004-02

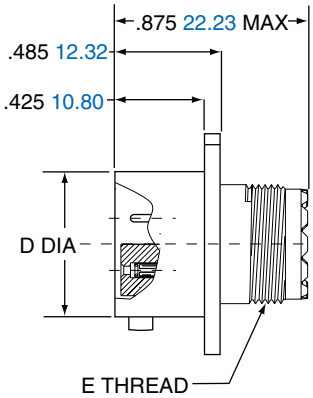

Shell Size	A Max.		B BSC.		C Ref.		D Dia.		E Thread UNEF-2A	F Dia.	
	in.	mm	in.	mm.	in.	mm	in.	mm.		in.	mm.
5	.710	18.03	.513	13.03	.460	11.68	.300	7.62	.2500-32	.245	6.30
6	.788	20.02	.598	15.19	.522	13.26	.362	9.19	.3125-32	.290	7.44
7	.895	22.73	.708	17.98	.590	14.99	.436	11.07	.4375-28	.390	9.86
8	1.154	29.31	.964	24.49	.668	16.97	.500	12.70	.5000-28	.450	11.38
9	1.210	30.73	1.017	25.83	.721	18.31	.561	14.25	.5625-24	.500	12.78
10	1.291	32.79	1.101	27.97	.795	20.19	.635	16.13	.6250-24	.562	14.30
12	1.395	35.43	1.204	30.58	.874	22.20	.714	18.14	.6875-24	.650	16.71
14	1.550	39.37	1.280	32.51	1.050	26.67	.865	21.97	.9375-20	.805	20.40

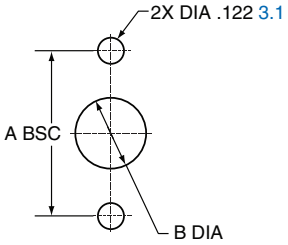

FLANGE MOUNT PANEL CUTOUTS

Shell Size	A BSC		B Dia	
	in.	mm.	in.	mm.
5	.513	13.03	.365	9.25
6	.598	15.19	.430	10.92
7	.708	17.98	.520	13.21
8	.964	17.98	.592	15.04
9	1.017	25.83	.645	16.38
10	1.101	27.97	.726	18.44
12	1.204	30.58	.832	21.13
14	1.280	32.51	.945	24.00

2M803 1/4 Turn Bayonet Coupling In-Line

2M803-003-01 and 2M803-004-01

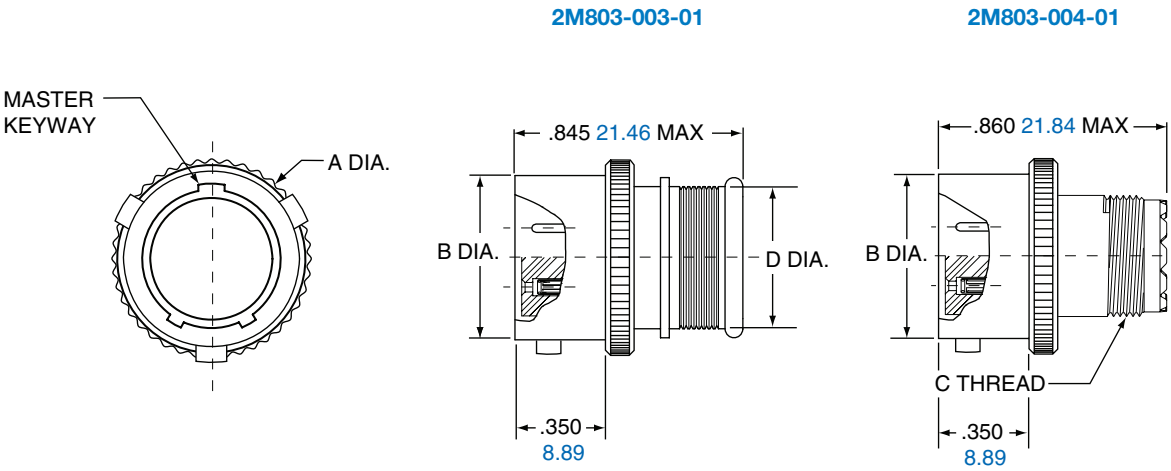

Shell Size	A Max.		B Dia.		C Thread UNEF-2A	D Dia.	
	in.	mm.	in.	mm.		in.	mm.
5	.385	9.78	.300	7.62	.2500-32	.245	6.30
6	.465	11.81	.362	9.19	.3125-32	.290	7.44
7	.485	12.32	.438	11.13	.4375-28	.390	9.86
8	.566	14.38	.498	12.65	.5000-28	.450	11.38
9	.658	16.71	.564	14.33	.5625-24	.500	12.78
10	.720	18.29	.636	16.15	.6250-24	.562	14.30
12	.810	20.57	.713	18.11	.6875-24	.650	16.71
14	1.027	26.09	.865	21.97	.9375-20	.805	20.40
15	1.027	26.09	.924	23.47	.9375-20	.850	21.67

2M803 1/4 Turn PCB Bayonet Coupling

Flange Mount & Jam Nut Receptacle 2M803-005-02 and 07

2M803-005-02

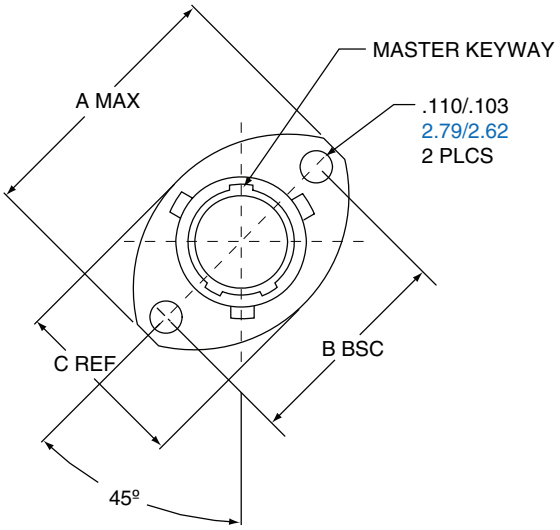

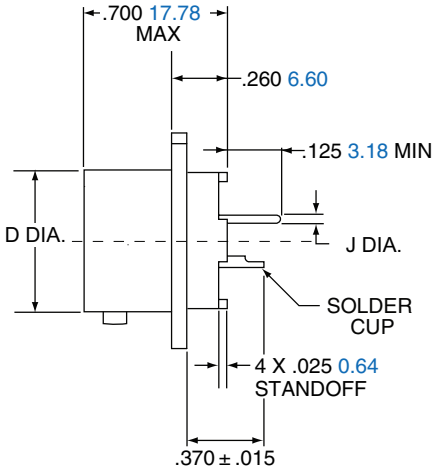

2M803-005-07

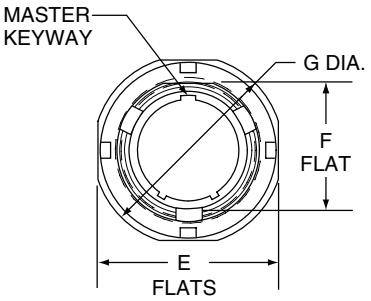

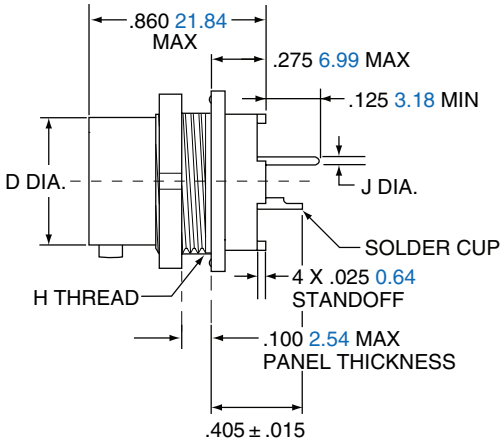

Shell Size	A Max.		B BSC.		C Ref.		D Dia.		E Flats		F Flats		G Dia.		H Thread	J Dia. Tail Dia.
	in.	mm	in.	mm.	in.	mm	in.	mm.	in.	mm.	in.	mm.	in.	mm.		
5	.710	18.03	.513	13.03	.460	11.68	.300	7.62	.545	13.84	.350	8.89	.575	14.61	.3750-32 UNEF-2A	**#23** .018/.022 0.46/0.56
6	.788	20.02	.598	15.19	.522	13.26	.362	9.19	.595	15.11	.410	10.42	.635	16.13	.4375-28 UNEF-2A	
7	.895	22.73	.708	17.98	.590	14.99	.436	11.07	.723	18.36	.536	13.61	.755	19.18	.5625-32 UN-2A	**#20/20HD** .025/.027 0.64/0.69
8	1.154	29.31	.964	24.49	.665	16.97	.500	12.70	.790	20.07	.593	15.10	.830	21.08	.6250-28 UN-2A	
9	1.210	30.73	1.017	25.83	.721	18.31	.561	14.25	.790	20.07	.596	15.14	.830	21.08	.6250-28 UN-2A	**#16** .060/.064 1.52/1.63
10	1.291	32.79	1.101	27.97	.795	20.19	.635	16.13	.925	23.51	.721	23.49	.955	24.26	.7500-28 UN-2A	
12	1.395	35.43	1.204	30.58	.874	22.20	.714	18.14	1.044	26.52	.845	21.46	1.078	27.38	.8750-28 UN-2A	
14	1.550	39.37	1.280	32.51	1.050	26.67	.865	21.97	1.230	31.24	1.022	25.96	1.264	32.11	1.0625-20 UN-2A	**#12** .092/.096 2.34/2.44
15	N/A	N/A	N/A	N/A	N/A	N/A	.924	23.47	1.287	32.69	1.093	27.76	1.322	33.58	1.1250-28 UN-2A	

2M803 Protection Caps

Ordering Guide for Protection Caps 2M660-082 and 2M660-083

Micro38999

2M803 ¼ Turn Bayonet Protective Caps are available in plug and receptacle versions. Protective caps keep the connector interface dry and clean while not in use. Caps come in a variety of materials, lanyard styles and lengths to accommodate specific design requirements.

2M803 FEATURES INCLUDE:

- Aluminum or Stainless Steel Bodies
- Rubber Gaskets for Environmental Sealing
- Stainless Steel Fittings
- Variety of attachments

1.	2.	3.	4.	5.	6.
SERIES	SERVICE CLASS	ATTACHMENT TYPE	SHELL SIZE	ATTACHMENT CODE	ATTACHMENT LENGTH IN INCHES
2M660-08X	-M	-G	6	04	-5

1. SERIES

Part #	Description
2M660-082	Protection Caps 2M803 Plugs
2M660-083	Protection Caps 2M803 Receptacles

2. SERVICE CLASS

Material	Part #	Description	RoHS
ALUMINUM	-C	Black Anodized (Non-conductive)	✓
	-M	Electroless Nickel	✓
	-NF	Olive Drab Cadmium	
	-MT	Durmalon (Ni PTFE)	✓
	-ZN	Olive Drab Zinc Nickel	✓
	-ZNU	Black Zinc Nickel	✓
STAINLESS STEEL	-Z1	Passivated	✓
	-ZL	Electrolytic Nickel	✓

3. ATTACHMENT TYPE

	Part #	Description
	-G	Nylon Rope
	-H	Stainless Steel Wire Rope, Tef-lon® Jacket
	-N	No Attachment
	-S	Stainless Steel Sash Chain
	-SK	Nylon Rope With Slip Knot
	-T	Stainless Steel Wire Rope, No Jacket
	-U	Stainless Steel Wire Rope, Polyurethane Jacket

4. SHELL SIZE

Part #
5
6
7
8
9
10
12
14
15

5. ATTACHMENT CODE

		Omit for attachment Types N (No Attachment) and SK (Slip Knot)	For Shell Size
	Small Ring	01 –.126 (3.20) I.D.	
		02 –.145 (3.68) I.D.	
		04 –.188 (4.78) I.D.	
		06 –.197 (5.00) I.D.	
	Large Ring	14 – .385 (9.78) I.D.	5
		15 – .445 (11.30) I.D.	6
		16 – .570 (14.48) I.D.	7
		17 – .635 (16.13) I.D.	8, 9
		19 – .885 (22.48) I.D.	10, 12
		20 –1.070 (27.17) I.D.	14
		22 –1.210 (32.38) I.D.	15
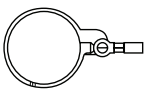	Split Ring	50 –.420 (10.67) I.D.	
		52 –.480 (12.19) I.D.	
		54 –.635 (16.13) I.D.	
		56 –.745 (18.92) I.D.	
		58 –.885 (22.48) I.D.	
		60 –1.010 (25.65) I.D.	
		64 –1.125 (28.58) I.D.	
		68 –1.345 (34.16) I.D.	

6. ATTACHMENT LENGTH IN INCHES

-5	Inch Length

Omit for attachment Type N (No Attachment)
Example "-5" equals five inch length

5. ADDITIONAL ATTACHMENT CODE

Omit for attachment Types N (No Attachment) and SK (Slip Knot)

	Large Ring	18 – .695 (17.65) I.D.
		21 – .885 (22.48) I.D.
		23 –1.275 (32.38) I.D.
		24 –1.375 (34.92) I.D.
		25 –1.530 (38.86) I.D.

Assembly Instructions for Protection Cap, see page 100.

2M803 1/4 Turn Bayonet Coupling

Protective Cap 2M660-082 and 2M660-083

2M660-082

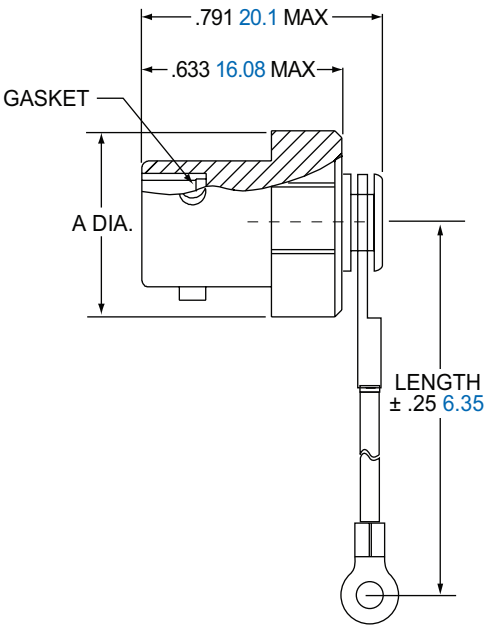

2M660-083

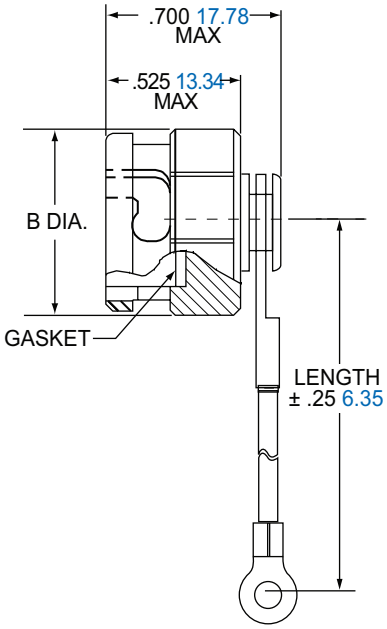

Shell Size	A Max.	
	in.	mm.
5	.620	15.75
6	.620	15.75
7	.620	15.75
8	.690	17.53
9	.760	19.30
10	.850	21.59
12	.940	23.88
14	1.170	29.72
15	1.230	31.24

Shell Size	B Max.	
	in.	mm.
6	.541	13.74
7	.618	15.70
9	.743	18.87
12	.892	22.66

MATERIALS	
Cover	Aluminum alloy or stainless steel
Gasket	Fluorosilicone rubber
Wire, Hardware	Stainless steel, passivated

2M Series 801 Dual-Start Acme Threads

General Information

Micro38999

Page Guide

Order F-69
Weight F-70
Plugs F-71
Jam Nut F-72
Square Flange F-73
In-Line F-74
Jam Nut &
Sq. Flange F-75
PCB Right Angle
Jam Nut F-76
PCB Double Flange .. F-77
Protection Caps F-78-80

Amphenol's 2M Micro38999 Connector Series… The New Aerospace Standard

Averaging less than half the size and weight of their 38999 ancestors, Amphenol's 2M Micro38999 series are an easy and inexpensive way to take weight out of your system. 2M meet or exceed most environmental and performance requirements listed in MIL-DTL-38999, so modernizing your equipment doesn't mean sacrificing ruggedness. With almost 2,000,000 configurations in every termination style and a full complement of accessories available right out of the catalog, customization has never been easier. Smarter, faster and smaller: Amphenol's 2M… the only connector you'll ever need.

2M801 Features

- Heavy Dual-Start ACME Thread
- Most durable of the 2M series
- Up to 2,000 mating cycles
- Two Plug Styles
- Ratcheting Anti-Decoupling Plug
- Free-Spinning Plug

Why 2M801?

2M801 is generally considered a legacy series and is mostly inactive for new designs. Its successor, the 2M805 series, has a number of important improvements, including a triple-start thread (which reduces the number of turns it takes to fully mate the connectors) and an EMI band (which increases shell-to-shell conductivity and greatly improves signal shielding). You should choose 2M801 if you're looking to maintain compatibility or interoperability with existing technology or cables.

2M VS 38999

SPECIFICATION	2M801	MIL-DTL 38999
Signal Count	1 to 130	1 to 187
Insulation Resistance	5,000 megaohms min	5,000 megaohms min
Operating Temperature	-65°C to +175°C	-65°C to +175°C
Shock	300 G ± 15	300 G ± 15
Vibration	"43.9 G Random 60.0 G Sine"	"43.9 G Random 60.0 G Sine"
Shielding Effectiveness	"55 dB min. from 100 MHz to 1000 MHz"	"50 dB min. from 100 MHz to 1000 MHz"
Durability	500 mating cycles	500 mating cycles
Shell to Shell Conductivity	2.5 mV drop max	2.5 mV drop max
Contacts	Per AS39029	Per AS39029

2M801 MATERIALS AND FINISHES

Shells	Aluminum Alloy or Stainless Steel
Contacts	Copper Alloy, gold plated
Insulators	Polyphenylene Sulfide (PPS)
Contact Retention	Beryllium Copper Alloy
Grommet, Interfacial Seal, O-Ring	Fluorosilicone Rubber

2M801 Dual-Start ACME Threads

Ordering Guide for 2M801

1.	2.	3.	4.	5.	6.
SERIES	SHELL STYLE	SERVICE CLASS	SHELL SIZE-INSERT AGGMT	CONTACTS	KEYING
2M801-007	-01	C	5-3	P	A

1. SERIES

Type	Part #	Description
CRIMP	**PLUG**	
	2M801-007	Plug with Integral Backshell
	2M801-008	Plug with Accessory Threads
	RECEPTACLE	
	2M801-009	Receptacle with Banding Platform
	2M801-010	Receptacle with Accessory Threads
	PCB/SOLDER	
PCB/ SOLDER	2M801-011	Receptacle for Solder Cup or PCB Termination with Epoxy Potting
	2M801-033	Receptacle with Solder Cup or PCB Termination with Special Sealing for Open Face (unmated) Water Immersion Requirements. 100% Leak Tested. To maintain a helium leak rate of $1\text{-}10^{-4}$ cc/sec. pressure differential from -55°C to 175° C.
	2M801-075	Receptacle with Standoff Flange for Mechanical PCB Strain Relief
	RIGHT ANGLE PCB	
	2M801-023	Receptacle w/ Right Angle PCB

2. SHELL STYLE

Part #	Desciption
PLUG	
-16	Anti-Decoupling
-26	Self-Locking Ratchet
RECEPTACLE	
-01	In-Line**
-02	Square Flange
-07	Jam Nut
PCB/SOLDER	
-02	Square Flange
-07	Jam Nut*
-12	Square Flange w/non-locking Clinch Nuts
-22	Square Flange w/ locking Clinch Nuts
RIGHT ANGLE PCB	
-07	Jam Nut*

*add "-501" as a suffix to the Jam Nut Part number to include a Hex Nut instead of a Spanner Nut.

3. SERVICE CLASS

Material	Part #	Description	RoHS
ALUMINUM	C	Anodized (Non-conductive)	✓
	M	Electroless Nickel	✓
	NF	Olive Drab Cadmium	
	MT	Durmalon (Ni PTFE)	✓
	ZN	Olive Drab Zinc Nickel	✓
	ZNU	Black Zinc Nickel	✓
	BEN	Black Electroless Nickel	✓
STAINLESS STEEL	Z1	Passivated	✓
	ZL	Electrolytic Nickel	✓

4. SHELL SIZE-INSERT ARRANGEMENT

See Table on pages 7-20

5. CONTACTS

Style	Part #	Description
CRIMP	P	Pin
	S	Socket
	A	Pin-Less Contacts
	B	Socket-Less Contacts
PCB/SOLDER		
PCB/SOLDER	P	Pin-PCB
	S	Socket-PCB
	E	Pin-Solder Cup
	F	Socket-Solder Cup

6. KEYING

Part #	A°	B°
A	150°	210°
B	75°	210°
C	95°	230°
D	140°	275°
E	75°	275°
F	95°	210°

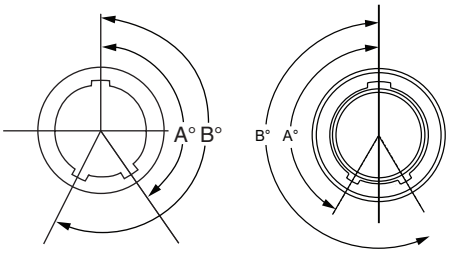

Receptacle View Plug View

For additional assistance building a part number and for 3D models, please visit www.amphenol-aerospace.com to access our 2M configurator.

2M801 High Speed Dual-Start ACME Threads

Ordering Guide for High Speed 2M801

Micro38999

The 2M801 High Speed Series of connectors is ideal for use in USB 2.0, eSATA and other high speed databus applications. These connectors utilize Teflon-based inserts that are optimized for high speed capability. Multiple standard insert arrangements are available. Ideal for applications where space is limited and a high speed interconnect is needed. This series features plugs with or without anti-decoupling mechanisms and a Dual-Start ACME thread that provides full mating in 1 1/2 turns. Plugs and receptacles are provided in two different shell styles to accommodate the attachment of backshell with rear accessory threads or with integral banding platform. The integral banding platform allows for use of EMI shielding attachments and/or overmolding. Contact termination styles include Crimp, PC Tail and Solder Cup.

1.	2.	3.	4.	5.	6.
SERIES	SHELL STYLE	SERVICE CLASS	SHELL SIZE-INSERT AGGMT	CONTACTS	KEYING
2M801-037	-01	M	7-10	P	A

1. SERIES

Type	Part #	Description
CRIMP	**PLUG**	
	2M801-036	Plug with Integral Backshell
	2M801-039	Plug with Accessory Threads
	RECEPTACLE	
	2M801-037	Receptacle with Banding Platform
	2M801-040	Receptacle with Accessory Threads
PCB/SOLDER		
PCB/ SOLDER	2M801-038	Receptacle for Solder Cup or PCB Termination with Epoxy Potting

2. SHELL STYLE

Part #	Desciption
PLUG	
-16	Anti-Decoupling
-26	Self-Locking Ratchet
RECEPTACLE	
-01	In-Line**
-02	Square Flange
-07	Jam Nut

*add "-501" as a suffix to the Jam Nut Part number to include a Hex Nut instead of a Spanner Nut.

3. SERVICE CLASS

Material	Part #	Description	RoHS
ALUMINUM	M	Electroless Nickel	✓
	NF	Olive Drab Cadmium	
	MT	Durmalon (Ni PTFE)	✓
	ZN	Olive Drab Zinc Nickel	✓
	ZNU	Black Zinc Nickel	✓
STAINLESS STEEL	Z1	Passivated	✓

4. SHELL SIZE-INSERT ARRANGEMENT

7-10	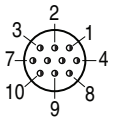
9-19	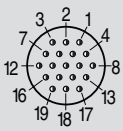
10-26	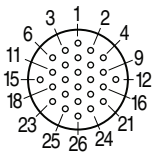

5. CONTACTS

Style	Part #	Description
CRIMP	P	Pin
	S	Socket
	A	Pin-Less Contacts
	B	Socket-Less Contacts

6. KEYING

Part #	A°	B°
A	150°	210°
B	75°	210°
C	95°	230°
D	140°	275°
E	75°	275°
F	95°	210°

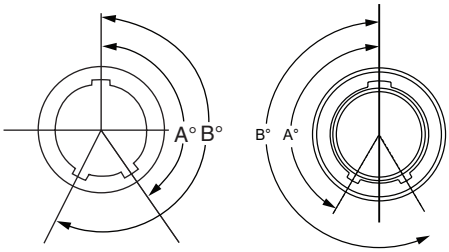

Receptacle View Plug View

For additional assistance building a part number and for 3D models, please visit www.amphenol-aerospace.com to access our 2M configurator.

2M Series 801 Dual-Start Acme Threads

Connector Weights

SERIES 2M801 MAXIMUM CONNECTOR WEIGHT IN GRAMS

Insert Arrg.	Plug	Jam Nut Recept. Crimp	Jam Nut Recept. PCB	Sq. Flange Recept. Crimp	Sq. Flange Recept. PCB
5-3P	4.4	3.4	3.6	2.0	2.2
5-3S	4.5	3.5	3.7	2.0	2.4
6-1P	5.6	4.3	4.6	2.7	2.9
6-1S	5.9	4.6	4.9	3.0	3.2
6-4P	5.6	4.3	4.6	2.7	2.9
6-4S	5.8	4.5	4.7	2.8	3.0
6-7P	5.4	4.1	4.6	2.9	3.4
6-7S	5.6	4.4	4.7	3.2	3.5
7-1P	7.8	6.5	7.2	4.5	5.2
7-1S	8.3	7.0	7.7	5.0	5.7
7-10P	7.6	6.3	7.7	4.3	5.0
7-10S	8.0	6.7	7.0	4.7	5.2
8-2P	8.9	7.7	7.2	5.6	6.8
8-2S	9.6	8.4	8.7	6.3	7.5
8-13P	8.3	7.1	9.4	5.0	6.2
8-13S	8.9	7.6	8.1	5.6	6.5
8-200P	9.2	8.0	8.5	5.9	7.1
8-200S	9.8	8.6	9.0	6.5	7.7
9-4P	10.9	8.7	10.7	7.6	8.6
9-4S	11.8	10.6	11.6	8.5	9.5
9-19P	10.1	7.9	9.2	5.8	7.1
9-19S	10.9	8.7	9.7	6.6	7.6
9-200P	10.4	9.2	10.2	7.1	8.1
9-200S	11.4	10.2	11.2	8.1	9.1
9-201P	9.6	8.4	9.4	6.6	7.6
9-201S	11.5	10.3	11.3	8.2	9.2
10-5P	15.8	12.6	13.5	14.1	12.8
10-5S	17.1	13.9	14.8	15.4	14.1
10-26P	14.2	11.0	11.9	12.5	8.7
10-26S	15.3	12.1	12.5	16.7	9.2
10-200P	15.0	11.8	12.7	13.3	10.0
10-200S	16.3	13.1	14.0	14.6	11.3
10-201P	15.3	12.1	13.3	13.6	10.3

Insert Arrg.	Plug	Jam Nut Recept. Crimp	Jam Nut Recept. PCB	Sq. Flange Recept. Crimp	Sq. Flange Recept. PCB
10-201S	16.7	13.5	14.4	15.0	11.7
10-202P	14.9	11.7	12.6	13.2	9.9
10-202S	16.3	13.1	14.0	14.6	11.3
13-2P	18.9	17.2	17.2	17.2	15.1
13-2S	20.4	18.7	18.7	18.7	16.6
13-3P	19.8	18.1	18.1	18.1	16.0
13-3S	21.4	19.7	19.7	19.7	17.6
13-7P	20.0	18.3	18.3	18.3	16.2
13-7S	22.4	20.7	20.7	20.7	18.6
13-37P	18.4	16.7	16.7	16.7	14.6
13-37S	19.9	17.6	17.6	17.6	15.5
13-200P	19.0	17.3	17.3	17.3	15.2
13-200S	21.1	19.4	19.4	19.4	17.3
13-201P	19.1	17.4	174	17.4	15.3
13-201S	21.3	19.6	19.6	19.6	17.5
16-5P	28.5	22.6	24.4	25.4	23.0
16-5S	31.2	25.3	28.1	28.1	25.7
16-12P	29.2	23.3	26.1	26.1	23.7
16-12S	32.5	26.6	29.4	29.4	27.0
16-55P	26.5	20.6	24.3	24.3	21.9
16-55S	29.2	23.3	26.1	26.1	23.7
17-7P	29.8	27.0	29.4	29.4	25.2
17-7S	33.0	30.2	32.6	32.6	28.4
17-14P	32.6	29.8	32.2	32.2	28.0
17-14S	32.3	29.5	31.9	31.9	27.7
17-85P	28.1	23.2	29.0	29.0	25.3
17-85S	31.0	26.2	30.6	30.6	26.4
21-12P	35.0	31.4	34.4	26.4	31.4
21-12S	39.6	36.0	39.0	31.0	36.0
21-22P	37.3	33.7	36.7	28.7	33.7
21-22S	43.6	40.0	43.0	35.0	40.0
21-130P	32.9	29.3	32.3	24.3	29.3
21-130S	39.4	35.8	38.8	30.8	35.8

2M801 Dual-Start ACME Threads Plug

2M801-007 and 2M801-008

Micro38999

2M801-007-16
2M801-007-26

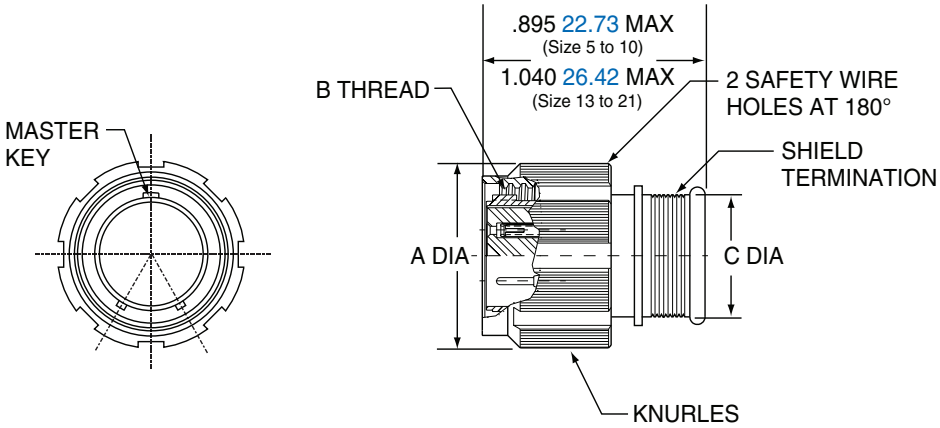

2M801-008-16
2M801-008-26

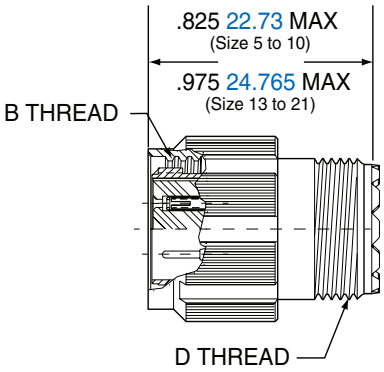

Shell Size	Style 16 A Dia. in.	Style 16 A Dia. mm.	Style 26 A Dia. in.	Style 26 A Dia. mm.	B Thread	C Dia. in.	C Dia. mm.	D Thread UNEF-2A
5	.545	13.84	.660	16.76	.3125-.05P-.1L-2B	.245	6.22	.2500-32
6	.610	15.49	.710	18.03	.3750-.05P-.1L-2B	.290	7.37	.3125-32
7	.695	17.65	.790	20.07	.4375-.05P-.1L-2B	.390	9.91	.4375-28
8	.750	19.05	.860	21.84	.5000-.05P-.1L-2B	.445	11.30	.5000-28
9	.810	20.57	.920	23.37	.5625-.05P-.1L-2B	.500	12.70	.5625-24
10	.890	22.61	.985	25.02	.6250-.05P-.1L-2B	.560	14.22	.6250-24
13	1.060	26.92	1.150	29.21	.8125-.1P-.2L-2B	.650	16.51	.6875-24
16	1.250	31.75	1.345	34.16	1.0000-.1P-.2L-2B	.805	20.45	.9375-20
17	1.310	33.27	1.400	35.56	1.0625-.1P-.2L-2B	.850	21.59	.9375-20
21	1.560	39.62	1.660	42.16	1.3125-.1P-.2L-2B	1.135	28.83	1.1875-18

2M801 Dual-Start ACME Threads Jam Nut

2M801-009-07 and 2M801-010-07

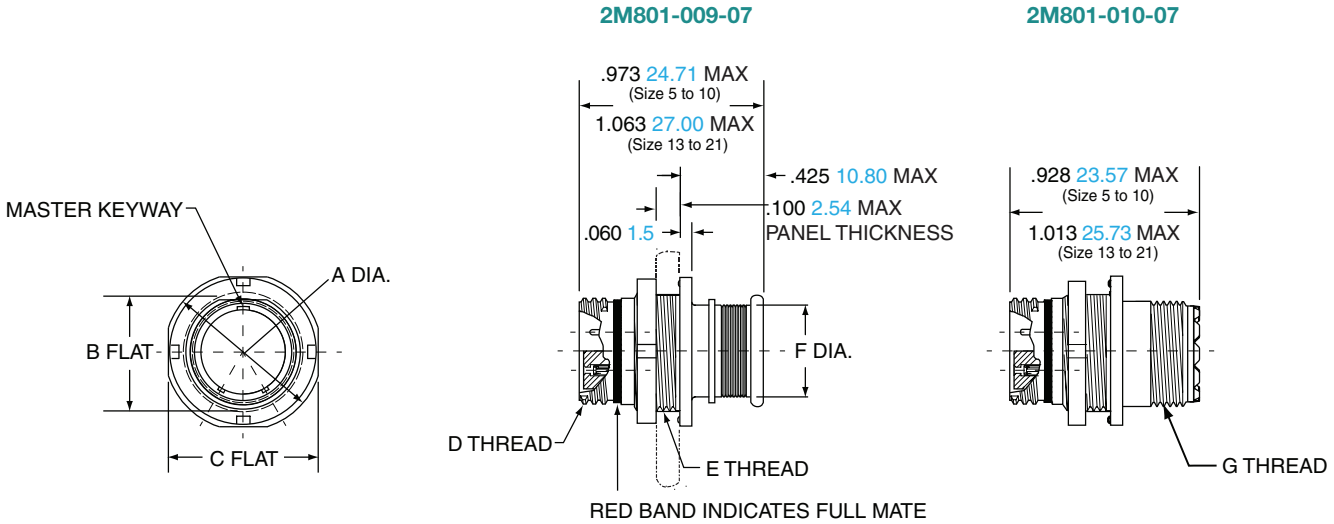

Shell Size	A Dia.		B Flat		C Flat		D Thread	E Thread	F Dia.		G Thread UNEF-2A
	in.	mm.	in.	mm.	in.	mm.			in.	mm.	
5	.575	14.61	.350	8.89	.545	13.84	.3125-.05P-.1L-2A	.3750-28 UN-2A	.245	6.22	.2500-32
6	.635	16.13	.410	10.41	.595	15.11	.3750-.05P-.1L-2A	.4375-28 UNEF-2A	.290	7.37	.3125-32
7	.755	19.18	.536	13.61	.723	18.36	.4375-.05P-.1L-2A	.5625-32 UN-2A	.390	9.91	.4375-28
8	.755	19.18	.536	13.61	.723	18.36	.5000-.05P-.1L-2A	.5625-32 UN-2A	.445	11.30	.5000-28
9	.830	21.08	.596	15.14	.790	20.07	.5625-.05P-.1L-2A	.6250-28 UN-2A	.500	12.70	.5625-24
10	.890	22.61	.658	16.71	.855	21.72	.6250-.05P-.1L-2A	.6875-28 UN-2A	.560	14.22	.6250-24
13	1.078	27.38	.845	21.46	1.044	26.52	.8125-.1P-.2L-2A	.8750-28 UN-2A	.650	16.51	.6875-24
16	1.264	32.11	1.022	25.96	1.230	31.24	1.0000-.1P-.2L-2A	1.0625-20 UN-2A	.805	20.45	.9375-20
17	1.325	33.66	1.096	27.84	1.290	32.77	1.0625-.1P-.2L-2A	1.125-28 UN-2A	.850	21.59	.9375-20
21	1.625	41.28	1.347	34.16	1.577	40.06	1.3125-.1P-.2L-2A	1.375-28 UN-2A	1.135	28.83	1.1875-18

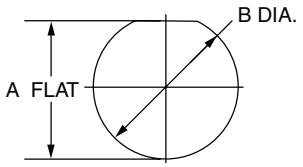

JAM NUT PANEL CUTOUT				
	A Flat		B Dia.	
Shell Size	in. ± .002	mm. ± 0.05	in. ± .002	mm. ± 0.05
5	.356	9.04	.385	9.78
6	.416	10.57	.447	11.35
7	.542	13.77	.572	14.53
8	.542	13.77	.572	14.53
9	.602	15.29	.635	16.13
10	.666	16.62	.697	17.70
13	.851	21.62	.885	22.48
16	1.028	26.11	1.075	27.31
17	1.102	27.99	1.135	28.83
21	1.354	34.39	1.385	35.18

2M801 Dual-Start ACME Threads Square Flange

Receptacle 2M801-009-02 and 2M801-010-02

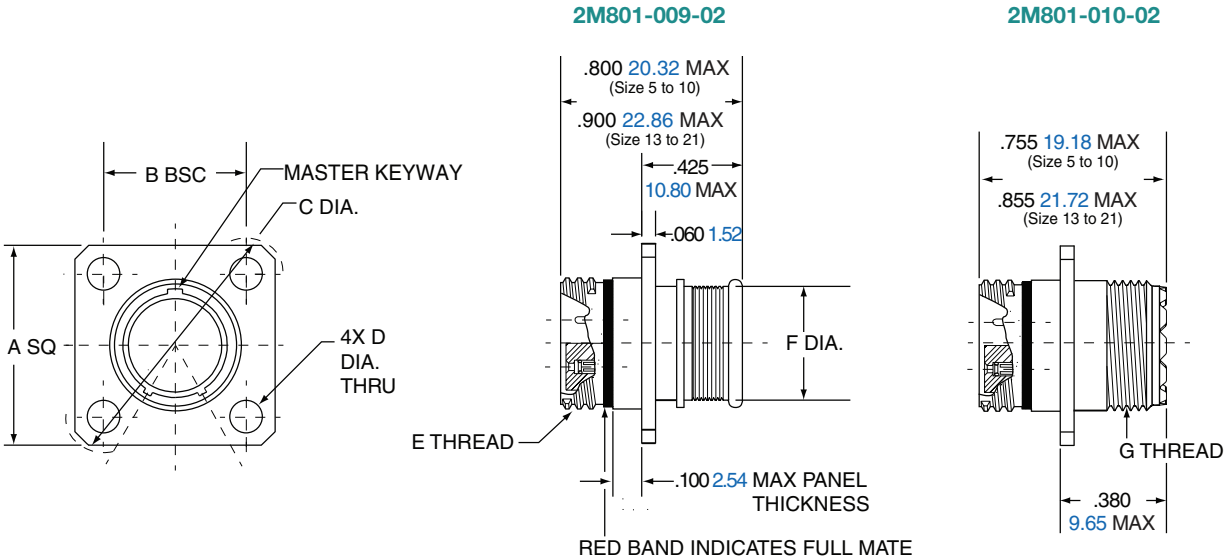

Shell Size	A		B BSC		C Dia.		D Dia.		E Thread	F Dia.		G Thread UNEF-2A
	in.	mm.	in.	mm.	in.	mm.	in. ± .003	mm. ± .08		in.	mm.	
5	.530	13.46	.363	9.22	.680	17.27	.093	2.36	.3125-.05P-.1L-2A	.245	6.22	.2500-32
6	.590	14.99	.423	10.74	.750	19.05	.093	2.36	.3750-.05P-.1L-2A	.290	7.37	.3125-32
7	.650	16.51	.483	12.27	.850	21.59	.093	2.36	.4375-.05P-.1L-2A	.390	9.91	.4375-28
8	.712	18.08	.545	13.84	.940	23.88	.093	2.36	.5000-.05P-.1L-2A	.445	11.30	.5000-28
9	.850	21.59	.607	15.42	1.125	28.58	.128	3.25	.5625-.05P-.1L-2A	.500	12.70	.5625-24
10	.890	22.61	.670	17.02	1.190	30.23	.128	3.25	.6250-.05P-.1L-2A	.560	14.22	.6250-24
13	1.030	26.16	.812	20.62	1.375	34.93	.128	3.25	.8125-.1P-.2L-2A	.650	16.51	.6875-24
16	1.219	30.96	.981	24.92	1.625	41.28	.128	3.25	1.0000-.1P-.2L-2A	.805	20.45	.9375-20
17	1.280	32.51	1.060	26.92	1.700	43.18	.128	3.25	1.0625-.1P-.2L-2A	.850	21.59	.9375-20
21	1.430	36.32	1.205	30.61	1.940	49.28	.128	3.25	1.3125-.1P-.2L-2A	1.135	28.83	1.1875-18

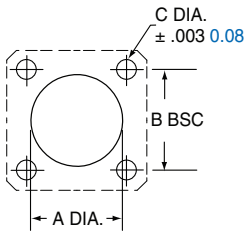

PANEL CUTOUT

Shell Size	A Dia.		B Dia.		C Dia.	
	in.	mm.	in.	mm.	in.	mm.
5	.330	8.38	.363	9.22	.093	2.36
6	.390	9.91	.423	10.74	.093	2.36
7	.450	11.43	.483	12.27	.093	2.36
8	.510	12.95	.545	13.84	.093	2.36
9	.575	14.61	.607	15.42	.128	3.25
10	.640	16.26	.670	17.02	.128	3.25
13	.825	20.96	.812	20.65	.128	3.25
16	1.015	25.78	.981	24.92	.128	3.25
17	1.075	27.31	1.060	26.92	.128	3.25
21	1.325	33.66	1.205	30.61	.128	3.25

2M801 Dual-Start ACME Threads In-Line

2M801-009-01 and 2M801-010-01

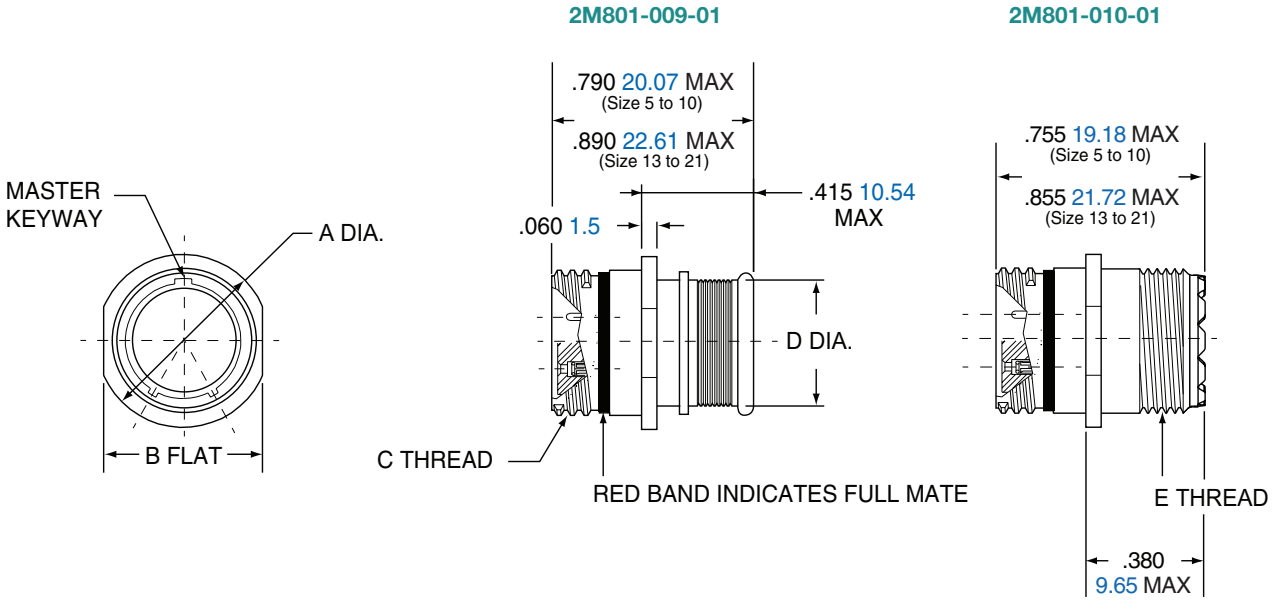

Shell Size	A Dia.		B Flat		C Thread	D Dia.		E Thread UNEF-2A
	in.	mm.	in.	mm.		in.	mm.	
5	.355	9.02	.325	8.13	.3125-.05P-.1L-2A	.245	6.22	.2500-32
6	.415	10.54	.385	9.78	.3750-.05P-.1L-2A	.290	7.37	.3125-32
7	.480	12.19	.445	11.30	.4375-.05P-.1L-2A	.390	9.91	.4375-28
8	.540	13.72	.510	12.95	.5000-.05P-.1L-2A	.445	11.30	.5000-28
9	.605	15.37	.575	14.61	.5625-.05P-.1L-2A	.500	12.70	.5625-24
10	.665	16.89	.635	16.13	.6250-.05P-.1L-2A	.560	14.22	.6250-24
13	.855	21.72	.825	20.96	.8125-.1P-.2L-2A	.650	16.51	.6875-24
16	1.040	26.42	1.010	25.65	1.0000-.1P-.2L-2A	.805	20.44	.9375-20
17	1.110	28.19	1.070	27.18	1.0625-.1P-.2L-2A	.850	21.59	.9375-20
21	1.405	35.69	1.385	35.18	1.3125-.1P-2L-2A	1.135	28.83	1.1875-18

2M801 Dual-Start ACME Threads

Jam Nut and Square Flange 2M801-011 and 2M801-033

Micro38999

2M801-011-07
2M801-033-07

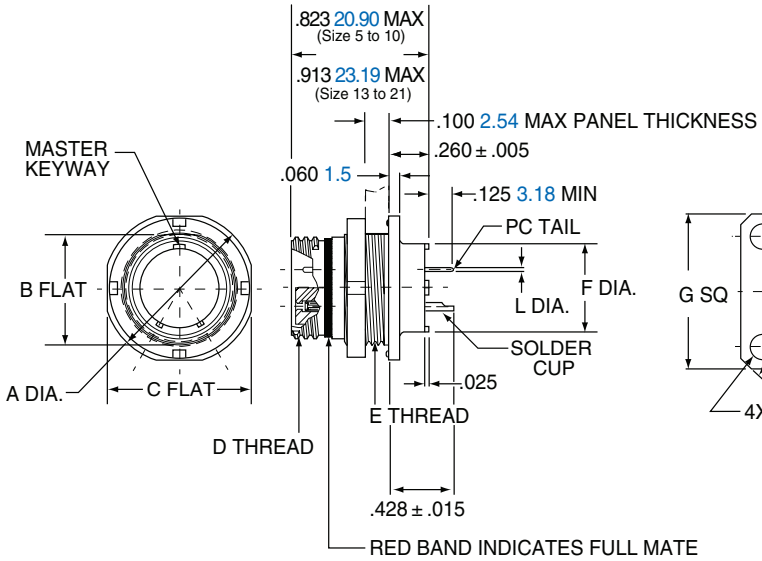

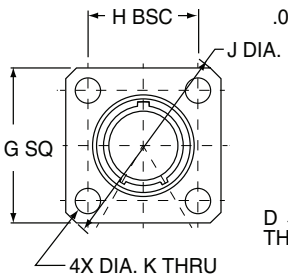

2M801-011-02
2M801-033-02

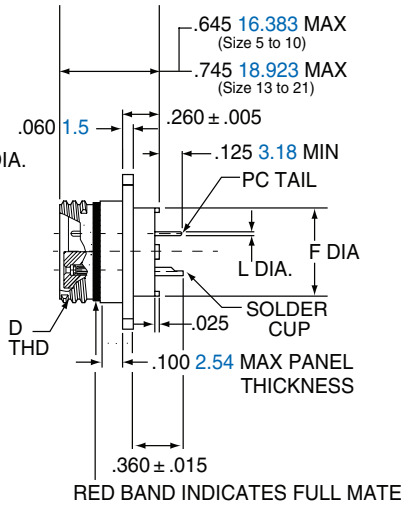

Shell Size	A Dia.		B Flat		C Flat		D Thread	E Thread	F Dia.		G Sq.		H BSC		J Dia.	
	in.	mm.	in.	mm.	in.	mm.			in.	mm.	in.	mm.	in.	mm.	in.	mm.
5	.575	14.61	.350	8.89	.545	13.84	.3125-.05P-.1L-2A	.3750-28	.244	6.20	.530	13.46	.363	9.22	.680	17.27
6	.635	16.13	.410	10.41	.595	15.11	.3750-.05P-.1L-2A	.4375-28	.330	8.38	.590	14.99	.423	10.74	.750	19.05
7	.755	19.18	.536	13.61	.723	18.36	.4375-.05P-.1L-2A	.5625-32	.432	10.97	.650	16.51	.483	12.27	.850	21.59
8	.755	19.18	.536	13.61	.723	18.36	.5000-.05P-.1L-2A	.5625-32	.493	12.52	.712	18.08	.545	13.84	.938	23.88
9	.830	21.08	.596	15.14	.790	20.07	.5625-.05P-.1L-2A	.6250-28	.551	14.00	.850	21.56	.607	15.42	1.125	28.58
10	.890	22.61	.658	16.71	.855	21.72	.6250-.05P-.1L-2A	.6875-28	.620	15.75	.890	22.61	.670	17.02	1.188	30.23
13	1.078	27.38	.845	21.46	1.044	26.52	.8125-.1P-.2L-2A	.8750-28	.703	17.86	1.030	26.16	.812	20.62	1.375	34.93
16	1.264	32.11	1.022	25.96	1.230	31.24	1.0000-.1P-.2L-2A	1.0625-20	.863	21.92	1.219	30.96	.981	24.92	1.625	41.28
17	1.325	33.66	1.096	27.84	1.290	32.77	1.0625-.1P-.2L-2A	1.1250-28	.912	23.16	1.280	32.51	1.060	26.92	1.700	43.18
21	1.625	41.28	1.345	34.16	1.577	40.06	1.3125-.1P-.2L-2A	1.3750-28	1.170	29.72	1.565	36.32	1.322	33.58	2.100	49.28

Shell Size	K Dia.		L Dia. Tail Dia.
	in.	mm.	
5	.093	2.36	**#23** .018/.022 0.46/0.56
6	.093	2.36	
7	.093	2.36	**#20/20HD** .025/.027 0.64/0.69
8	.093	2.36	
9	.128	3.25	**#16** .060/.064 1.52/1.63
10	.128	3.25	
13	.128	3.25	
16	.128	3.25	**#12** .092/.096 2.34/2.44
17	.128	3.25	
21	.128	3.25	

JAM NUT 07

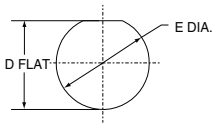

SQUARE FLANGE 02

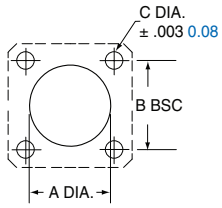

PANEL CUTOUT

Shell Size	A Dia.		B Dia.		C Dia.		D Flat		E Dia.	
	in.	mm.	in.	mm.	in.	mm.	in. ±.002	mm. ± 0.05	in. ±.002	mm. ± 0.05
5	.330	8.38	.363	9.22	.093	2.36	.356	9.04	.385	9.78
6	.390	9.91	.423	10.74	.093	2.36	.416	10.57	.447	11.35
7	.450	11.43	.483	12.27	.093	2.36	.542	13.77	.572	14.53
8	.510	12.95	.545	13.84	.093	2.36	.542	13.77	.572	14.53
9	.575	14.61	.607	15.42	.128	3.25	.602	15.29	.635	16.13
10	.640	16.26	.670	17.02	.128	3.25	.666	16.92	.697	17.70
13	.825	20.96	.812	20.65	.128	3.25	.851	21.62	.885	22.48
16	1.015	25.78	.981	24.92	.128	3.25	1.028	26.11	1.075	27.31
17	1.075	27.31	1.060	26.92	.128	3.25	1.102	27.99	1.135	28.83
21	1.330	33.78	1.322	33.58	.128	3.25	1.354	34.39	1.385	35.18

2M801 Dual-Start Right Angle PCB

Jam Nut Connector 2M801-023-07

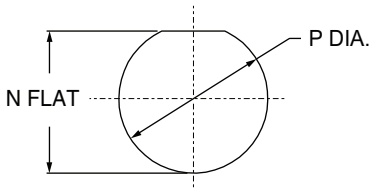

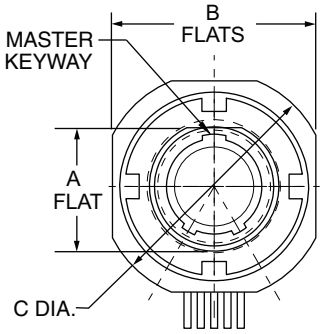

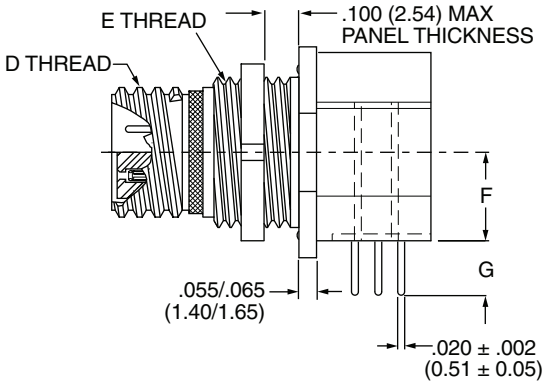

MASTER KEYWAY IS LOCATED AT TOP DEAD CENTER FOR ALL ARRANGEMENTS EXCEPT FOR THE 8-13.

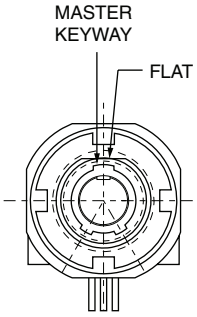

5-3, 6-4, 6-7, 7-10, AND 9-19
MASTER KEYWAY LOCATION

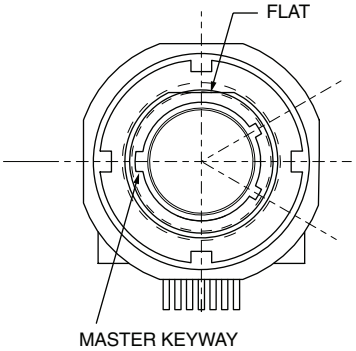

8-13
MASTER KEYWAY LOCATION

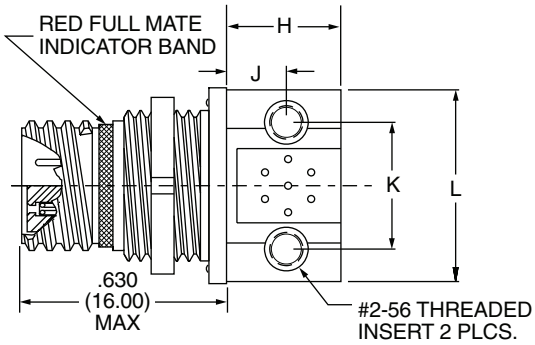

Shell Size	A		B		C Dia.		D Thread	E Thread	F		G		H	
	in. ±.005	mm. ±.0.13	in.	mm.	in.	mm.			in.	mm.	in. ±.035	mm. ±0.89	in.	mm.
5-3	.350	8.89	.548	13.92	.575	14.61	.3125-.05P-.1L-2A	.3750-28 UN-2A	.225	5.72	.275	6.99	.260	6.60
6-4	.410	10.41	.598	15.19	.635	16.13	.3750-.05P-.1L-2A	.4375-28 UNEF-2A	.225	5.72	.265	6.73	.345	8.76
6-7	.410	10.41	.598	15.19	.635	16.13	.3750-.05P-.1L-2A	.4375-28 UNEF-2A	.225	5.72	.265	6.73	.345	8.76
7-10	.536	13.61	.726	18.44	.755	19.18	.4375-.05P-.1L-2A	.5625-32 UN-2A	.296	7.52	.273	6.93	.345	8.76
8-2	.538	13.67	.728	18.49	.758	19.25	.5000-.05P-.1L-2A	.5625-32 UN-2A	.319	8.10	.316	.803	.490	12.45
8-13	.538	13.67	.728	18.49	.758	19.25	.5000-.05P-.1L-2A	.5625-32 UN-2A	.319	8.10	.316	8.03	.490	12.45
9-19	.596	15.14	.793	20.14	.833	21.16	.5625-.05P-.1L-2A	.6250-28 UN-2A	.360	9.14	.275	6.99	.490	12.45

Shell Size	J		K		L		N		P	
	in.	mm.	in.	mm.	in.	mm.	in. ±.002	mm. ±.0.05	in. ±.005	mm. ±0.13
5-3	.165	4.19	.310	7.87	.490	14.45	.357	9.07	.385	9.78
6-4	.187	4.75	.408	10.36	.589	15.19	.418	10.62	.448	11.37
6-7	.187	4.75	.408	10.36	.589	15.19	.418	10.62	.448	11.37
7-10	.170	4.32	.452	11.48	.710	18.03	.544	13.82	.573	14.55
8-2	.230	5.84	.490	4.31	.710	18.03	.544	13.82	.573	14.55
8-13	.230	5.84	.490	12.45	.710	18.03	.544	13.82	.573	14.55
9-19	.342	8.69	.600	15.24	.800	20.32	.603	15.32	.635	16.13

PANEL CUTOUT

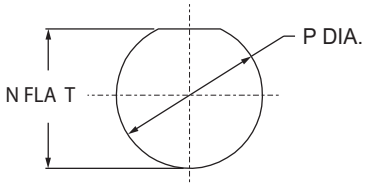

2M801 Dual-Start PCB Jam Nut, Double Flange

Receptacle 2M801-075

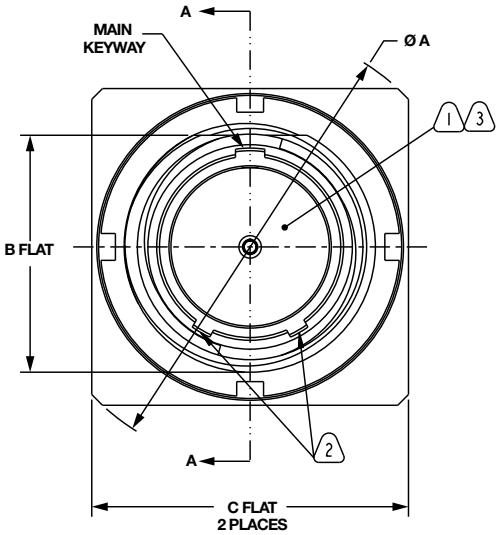

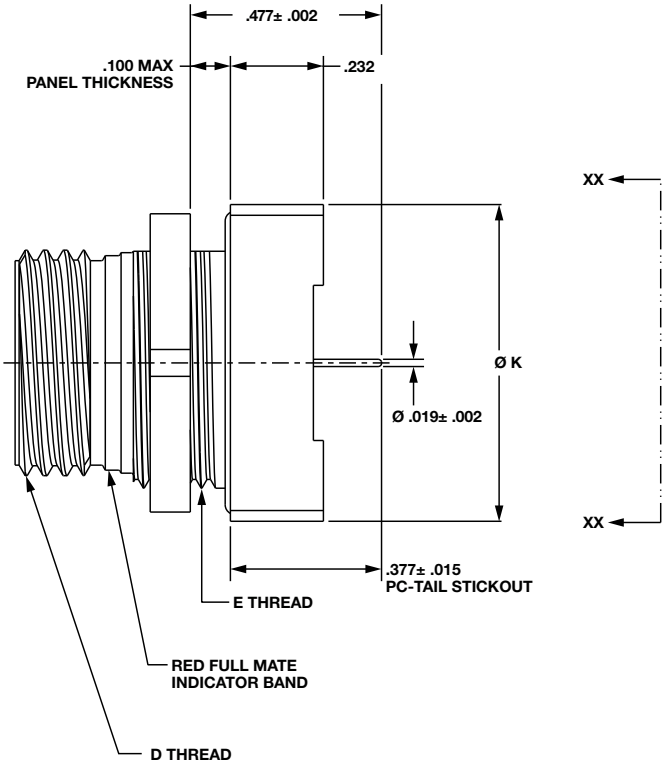

Shell Size	A Dia.		B Flat		C Flat		D Thread	E Thread	K Dia.	
	in.	mm.	in.	mm.	in.	mm.			in.	mm.
5	.575	14.61	.350	8.89	.545	13.84	.3125-.05P-.1L-2A	.3750-28	.844	21.43
6	.635	16.13	.410	10.41	.595	15.11	.3750-.05P-.1L-2A	.4375-28	.900	22.86
7	.755	19.18	.536	13.61	.723	18.36	.4375-.05P-.1L-2A	.5625-32	NA	NA
8	.755	19.18	.536	13.61	.723	18.36	.5000-.05P-.1L-2A	.5625-32	NA	NA
9	.830	21.08	.596	15.14	.790	20.07	.5625-.05P-.1L-2A	.6250-28	1.000	25.4
10	.890	22.61	.658	16.71	.855	21.72	.6250-.05P-.1L-2A	.6875-28	NA	NA
13	1.078	27.38	.845	21.46	1.044	26.52	.8125-.1P-.2L-2A	.8750-28	NA	NA
16	1.264	32.11	1.022	25.96	1.230	31.24	1.0000-.1P-.2L-2A	1.0625-20	NA	NA
17	1.325	33.66	1.096	27.84	1.290	32.77	1.0625-.1P-.2L-2A	1.1250-28	NA	NA
21	1.625	41.28	1.345	34.16	1.577	40.06	1.3125-.1P-.2L-2A	1.3750-28	NA	NA

2M801 Protection Caps

Ordering Guide for Metal Protection Cap 2M667-217 and 218

2M801 Double Start Protective Caps are available in plug and receptacle versions. Protective caps keep the connector interface dry and clean while not in use. Caps come in a variety of materials, lanyard styles and lengths to accommodate specific design requirements.

2M801 FEATURES INCLUDE:

- Aluminum or Stainless Steel Bodies
- Rubber Gaskets for Environmental Sealing
- Stainless Steel Fittings
- Variety of attachments

1. SERIES	2. SERVICE CLASS	3. ATTACHMENT TYPE	4. CONNECTOR SHELL SIZE	5. ATTACHMENT CODE	6. ATTACHMENT LENGTH IN INCHES
2M667-21X	-NF	-S	5	04	-5

1. SERIES

Part #	Description
2M667-217	Protection Caps 2M801 Plugs
2M667-218	Protection Caps 2M801 Receptacles

2. SERVICE CLASS

Material	Part #	Description	RoHS
ALUMINUM	-C	Black Anodized (Non-conductive)	✓
	-M	Electroless Nickel	✓
	-NF	Olive Drab Cadmium	
	-MT	Durmalon (Ni PTFE)	✓
	-ZN	Olive Drab Zinc Nickel	✓
	-ZNU	Black Zinc Nickel	✓
STAIN-LESS STEEL	-Z1	Passivated	✓
	-ZL	Electrolytic Nickel	✓

3. ATTACHMENT TYPE

	Part #	Description
	-G	Nylon Rope
	-H	Stainless Steel Wire Rope, Tef-lon® Jacket
	-N	No Attachment
	-S	Stainless Steel Sash Chain
	-SK	Nylon Rope With Slip Knot
	-T	Stainless Steel Wire Rope, No Jacket
	-U	Stainless Steel Wire Rope, Polyurethane Jacket

4. CONNECTOR SHELL SIZE

Part #
5
6
7
8
9
10
13
16
17
21

5. ATTACHMENT CODE

	Omit for attachment Types N (No Attachment) and SK (Slip Knot)		
	Small Ring	01 –.126 (3.20) I.D.	
		02 –.145 (3.68) I.D.	
		04 –.188 (4.78) I.D.	
		06 –.197 (5.00) I.D.	
			For Shell Size
	Large Ring	14 –.385 (9.78) I.D.	5
		15 –.445 (11.30) I.D.	6
		16 –.570 (14.48) I.D.	7, 8
		17 –.635 (16.13) I.D.	9
		18 –.695 (17.65) I.D.	10
		19 –.885 (22.48) I.D.	13
		20 –1.070 (27.17) I.D.	16
		21 –1.135 (28.83) I.D.	17
		24 –1.375 (34.94) I.D.	21
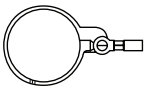	Split Ring	50 –.420 (10.67) I.D	
		52 –.480 (12.19) I.D.	
		54 –.635 (16.13) I.D.	
		56 –.745 (18.92) I.D.	
		58 –.885 (22.48) I.D.	
		60 –1.010 (25.65) I.D.	
		64 –1.125 (28.58) I.D.	
		68 –1.345 (34.16) I.D.	

5. ADDITIONAL ATTACHMENT CODE

	Large Ring	22 –1.210 (30.73) I.D. 25 –1.530 (38.86) I.D. 23 –1.275 (32.39) I.D.

6. ATTACHMENT LENGTH IN INCHES

-5	Inch Length

Omit for attachment Type N (No Attachment)
Example "-5" equals five inch length

Assembly Instructions for Protection Cap, see page 100.

Metal Protective Cap 2M667-217

2M667-217 (PLUG)

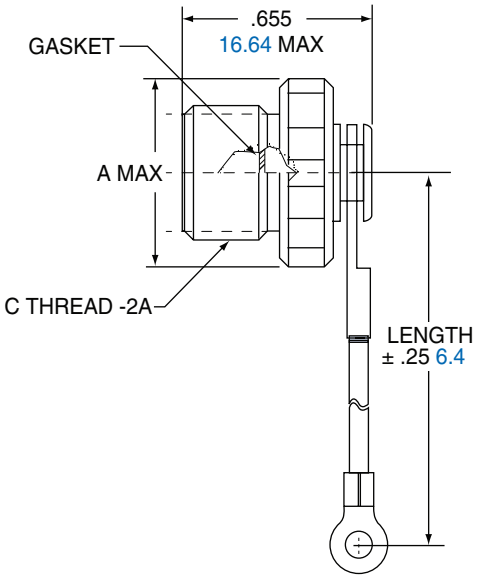

Shell Size	A Max.		B Max.		C
	in.	mm.	in.	mm.	
5	.463	11.76	.550	13.97	.3125-.05P-1L
6	.523	13.28	.613	15.57	.3750-.05P-1L
7	.588	14.94	.700	17.78	.4375-.05P-1L
8	.648	16.46	.758	19.25	.5000-.05-.1L
9	.713	18.11	.813	20.65	.5625-.05P-.1L
10	.773	19.63	.893	22.68	.6250-.05P-1L
13	.963	24.46	1.063	27.00	.8125-.1P-.2L
16	1.148	29.16	1.257	31.93	1.0000-.1P-.2L
17	1.213	30.81	1.313	33.35	1.0625-.1P-.2L
21	1.473	37.41	1.563	39.70	1.3125-.1P-.2L

MATERIALS	
Cover	Aluminum alloy or stainless steel
Gasket	Silicone rubber
Wire, Hardware	Stainless steel, passivated

2M801 Dual-Start ACME Threads

Metal Protective Cap 2M667-218

2M667-218 (RECEPTACLE)

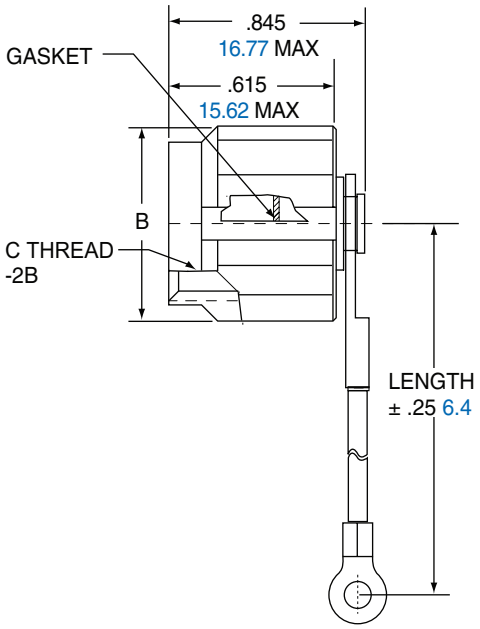

Shell Size	A Max.		B Max.		C
	in.	mm.	in.	mm.	
5	.463	11.76	.550	13.97	.3125-.05P-1L
6	.523	13.28	.613	15.57	.3750-.05P-1L
7	.588	14.94	.700	17.78	.4375-.05P-1L
8	.648	16.46	.758	19.25	.5000-.05-.1L
9	.713	18.11	.813	20.65	.5625-.05P-.1L
10	.773	19.63	.893	22.68	.6250-.05P-1L
13	.963	24.46	1.063	27.00	.8125-.1P-.2L
16	1.148	29.16	1.257	31.93	1.0000-.1P-.2L
17	1.213	30.81	1.313	33.35	1.0625-.1P-.2L
21	1.473	37.41	1.563	39.70	1.3125-.1P-.2L

MATERIALS	
Cover	Aluminum alloy or stainless steel
Gasket	Silicone rubber
Wire, Hardware	Stainless steel, passivated

Amphenol's 2M Micro38999 Connector Series… The New Aerospace Standard

Averaging less than half the size and weight of their 38999 ancestors, Amphenol's 2M Micro38999 series are an easy and inexpensive way to take weight out of your system. 2M meet or exceed most environmental and performance requirements listed in MIL-DTL-38999, so modernizing your equipment doesn't mean sacrificing ruggedness. With almost 2,000,000 configurations in every termination style and a full complement of accessories available right out of the catalog, customization has never been easier. Smarter, faster and smaller: Amphenol's 2M… the only connector you'll ever need.

Page Guide

2M805
Order G-82
Flange Mount..... G-83
Solder Mount..... G-84
Jam Nut..... G-85

2M804
Order G-86
Rear Panel Jam G-87
Front Panel Jam..... G-88

2M803
Order G-89
Flange Mt. / Jam G-90

2M801
Order G-91
Jam Nut..... G-92
Square Flange G-93
Weld Mount G-94

Why 2M Hermetic?

2M Series of Hermetic Receptacles provide superior sealing of 1x10-7 cc/second helium leak rate and are 100% tested prior to shipping. This superior sealing is accomplished through the use of glass insulator fused to stainless steel shells and nickel iron alloy contacts.

2M805 Tri-Start Hermetic Receptacle

Ordering Guide for 2M805-006

2M805 Series of Hermetic Receptacles provide superior sealing of 1x10-8 cc/second helium leak rate and are 100% tested prior to shipping. This superior sealing is accomplished through the use of glass insulator fused to stainless steel shells and iron alloy contacts.

2M805 FEATURES INCLUDE:

- Low profile shells for minimum box protrusion
- Shell Standoffs for PC Board washout
- Non-removable PC and/or Solder cup contacts
- Hermetic Sealing

1.	2.	3.	4.	5.	6.
SERIES	**SHELL SIZE**	**SERVICE CLASS**	**SHELL SIZE-INSERT AGGMT**	**CONTACTS**	**KEYING**
2M805-006	**-07**	**Z1**	**12-26**	**C**	**A**

Example Part Number

1. SERIES

Part #	Description
2M805-006	Hermetic Receptacle

2. SHELL SIZE

Part #	Desciption
-02	Square Flange
-03	Weld Mount (only available in Z1 Finish)
-07	Jam Nut for Rear Panel Mounting Receptacle

3. SERVICE CLASS

Material	Part #	Description	RoHS
STAINLESS STEEL	**Z1**	Passivated	
	ZL	Electrolytic Nickel	

4. SHELL SIZE-INSERT ARRANGEMENT

See Table on pages 7-20

5. CONTACTS

Part #	Description
P	Pin- Solder Cup
C	Pin-PC Tail
H	Pin, Solder Cup- Without Interfacial Seal
Y	Pin, PC Tail- Without Interfacial Seal

6. KEYING

Part #	A°	B°
A	150°	210°
B	75°	210°
C	95°	230°
D	140°	275°

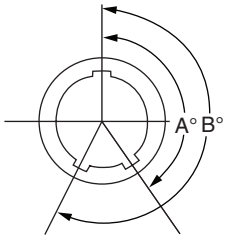

Receptacle View

Note: Please contact the factory directly for a listing of tooled interfacial seals for the hermetically sealed connectors.

Please note, Amphenol standard 2M hermetic connector are provided less the interfacial seal. Please contact the factory for availability on the interfacial seal.

2M805 Tri-Start Flange Mount Hermetic

2M805-006-02

Micro38999

2M805-006-02

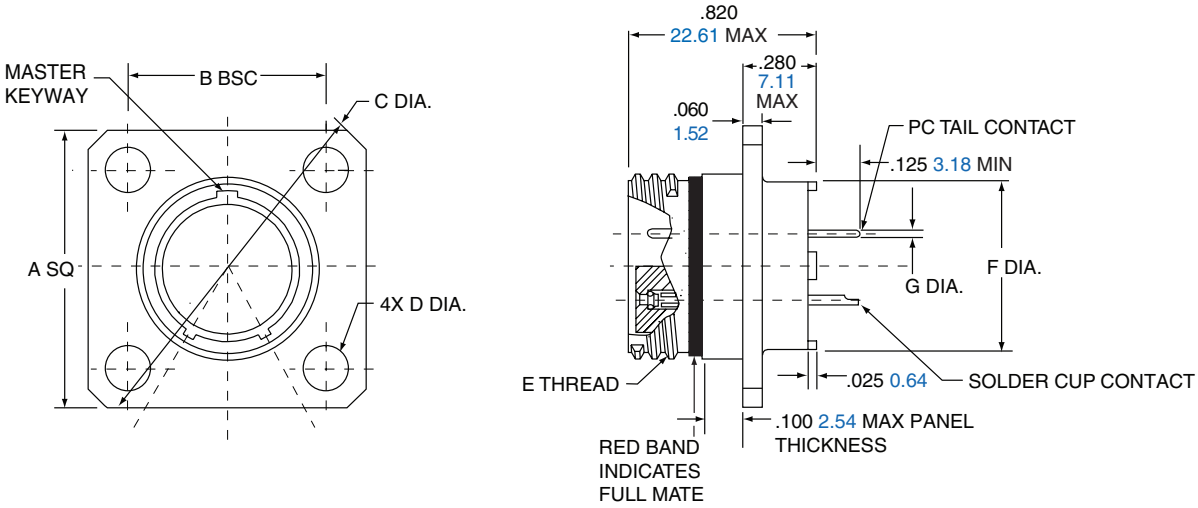

Shell Size	A Sq.		B BSC.		C Dia.		D Dia.		E Threads	F Dia.		G PC Tail Dia.
	in.	mm.	in.	mm.	in.	mm.	in. ±.003	mm. ±.08		in.	mm.	
8	.853	21.67	.660	16.76	1.153	29.29	.091	2.31	.5000-.1P-.3L-TS-2A	.330	8.38	**#23** .018/.022 0.46/0.56
9	.916	23.27	.723	18.36	1.233	31.32	.091	2.31	.5625-.1P-.3L-TS-2A	.432	10.97	
10	.978	24.84	.785	19.94	1.333	33.86	.091	2.31	.6250-.1P-.3L-TS-2A	.493	12.52	**#20/20HD** .024/.028 0.64/0.69
11	1.042	26.47	.848	21.54	1.413	35.89	.091	2.31	.6875-.1P-.3L-TS-2A	.551	14.00	
12	1.102	27.99	.909	23.09	1.503	38.18	.091	2.31	.7500-.1P-.3L-TS-2A	.622	15.80	**#16** .060/.064 1.521/1.63
15	1.291	32.79	1.058	26.87	1.753	44.53	.125	3.18	.9375-.1P-.3L-TS-2A	.703	17.86	
18	1.478	37.54	1.255	31.88	2.003	50.88	.125	3.18	1.1250-.1P-.3L-TS-2A	.863	21.92	**#12** .092/.096 2.34/2.44
19	1.540	39.12	1.327	33.71	2.097	53.26	.125	3.18	1.1875-.1P-.3L-TS-2A	.912	23.16	
23	1.790	45.47	1.570	39.88	2.443	62.05	.125	3.18	1.4375-.1P-.3L-TS-2A	1.163	29.54	

2M805 Tri-Start Solder Mount Hermetic

2M805-006-03

2M805-006-03

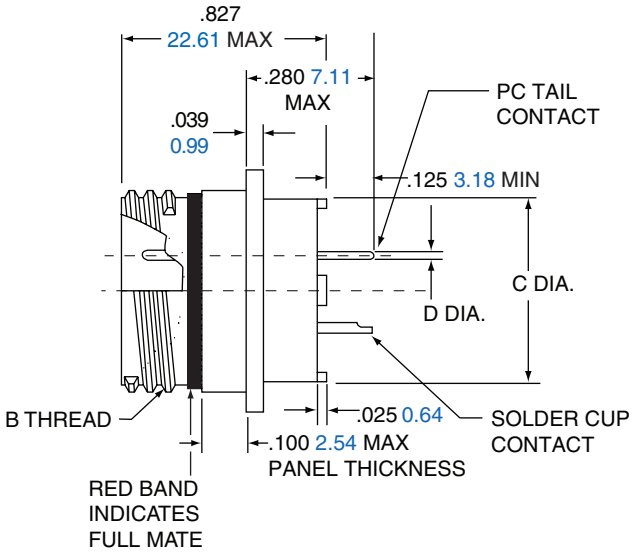

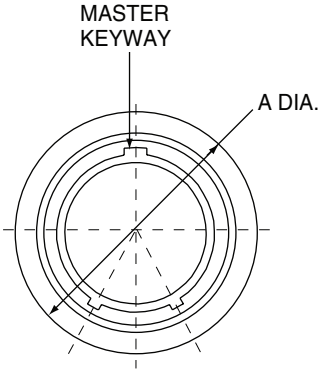

Shell Size	A Dia.		B Threads	C Dia.		D PC Tail Dia.
	in.	mm.		in.	mm.	
8	.625	15.88	.5000-.1P-.3L-TS-2A	.330	8.38	**#23** .018/.022 0.46/0.56
9	.688	17.48	.5625-.1P-.3L-TS-2A	.432	10.97	
10	.750	19.75	.6250-.1P-.3L-TS-2A	.493	12.52	**#20/20HD** .025/.027 0.64/0.69
11	.812	20.62	.6875-.1P-.3L-TS-2A	.551	14.00	
12	.875	22.23	.7500-.1P-.3L-TS-2A	.620	15.78	**#16** .060/.064 1.521/1.63
15	1.062	26.97	.9375-.1P-.3L-TS-2A	.703	17.86	
18	1.250	31.75	1.1250-.1P-.3L-TS-2A	.863	21.92	**#12** .092/.096 2.34/2.44
19	1.312	33.32	1.1875-.1P-.3L-TS-2A	.912	23.16	
23	1.563	39.70	1.4375-.1P-.3L-TS-2A	1.162	29.51	

2M805 Tri-Start Jam Nut Hermetic

2M805-006-07

Micro38999

2M805-006-07

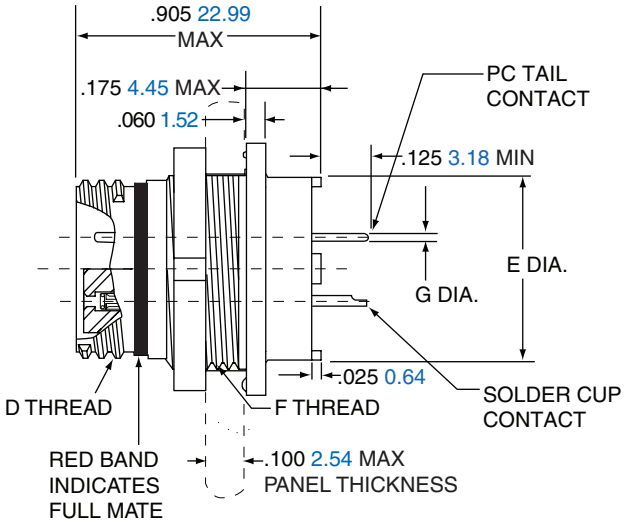

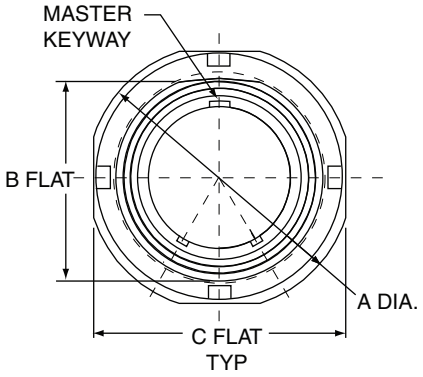

Shell Size	A Dia.		B Flat		C Flat		D Threads	E Dia.		F Threads	G PC Tail Dia.
	in.	mm.	in.	mm.	in.	mm.		in.	mm.		
8	.760	19.30	.535	13.59	.730	18.54	.5000-.1P-.3L-TS-2A	.330	8.38	.5625-28 UN-2A	**#23** .018/.022 0.46/0.56
9	.880	22.35	.661	16.79	.850	21.59	.5625-.1P-.3L-TS-2A	.432	10.97	.6875-28 UN-2A	
10	.880	22.35	.661	16.79	.850	21.59	.6250-.1P-.3L-TS-2A	.493	12.52	.6875-28 UN-2A	**#20/20HD** .024/.028 0.64/0.69
11	.955	24.26	.721	18.31	.925	23.50	.6875-.1P-.3L-TS-2A	.551	14.00	.7500-28 UN-2A	
12	1.060	26.92	.784	19.91	1.035	26.29	.7500-.1P-.3L-TS-2A	.620	15.78	.8125-28 UN-2A	**#16** .060/.064 1 .521/1.63
15	1.203	30.56	.970	24.64	1.173	29.79	.9375-.1P-.3L-TS-2A	.703	17.86	1.0000-28 UN-2A	
18	1.389	35.28	1.147	29.13	1.359	34.52	1.1250-.1P-.3L-TS-2A	.863	21.92	1.1875-28 UN-2A	**#12** .092/.096 2.34/2.44
19	1.450	36.83	1.221	31.01	1.420	36.07	1.1875-.1P-.3L-TS-2A	.912	23.16	1.2500-28 UN-2A	
23	1.705	43.31	1.470	37.34	1.675	42.55	1.4375-.1P-.3L-TS-2A	1.162	29.51	1.5000-28 UN-2A	

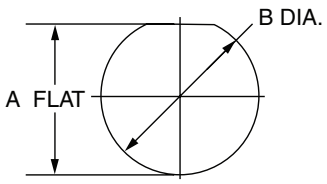

PANEL CUTOUT FOR JAM NUT

Shell Size	A Flat		B Dia	
	in. ±.002	mm. ± 0.05	in. ±.005	mm. ± 0.13
8	.543	13.79	.572	14.53
9	.669	16.99	.698	17.73
10	.669	16.99	.698	17.73
11	.729	18.51	.760	19.30
12	.792	20.17	.822	20.88
15	.978	24.84	1.010	25.65
18	1.155	29.34	1.198	30.43
19	1.231	31.27	1.260	32.00
23	1.480	37.59	1.510	38.35

2M804 Push-Pull Hermetic Receptacle

Ordering Guide for 2M804-006

2M804 Series of Hermetic Receptacles provide superior sealing of $1x10^{-8}$ cc/second helium leak rate and are 100% tested prior to shipping. This superior sealing is accomplished through the use of glass insulator fused to stainless steel shells and iron alloy contacts.

2M804 FEATURES INCLUDE:

- Low profile shells for minimum box protrusion
- Shell Standoffs for PC Board washout
- Non-removable PC and/or Solder cup contacts
- Hermetic Sealing

1.	2.	3.	4.	5.	6.
SERIES	SHELL SIZE	SERVICE CLASS	SHELL SIZE-INSERT AGGMT	CONTACTS	KEYING
2M804-006	-07	Z1	9-19	P	A

Example Part Number

1. SERIES

Part #	Description
2M804-006	Hermetic Receptacle with Printed Circuit Board Contacts or Solder Cup Contacts.

2. SHELL SIZE

Part #	Desciption
-00	Jam Nut for Front Panel Mounting
-07	Jam Nut for Rear Panel Mounting Receptacle

3. SERVICE CLASS

Material	Part #	Description	RoHS
STAINLESS STEEL	Z1	Passivated	
	ZL	Electrolytic Nickel	

4. SHELL SIZE-INSERT ARRANGEMENT

See Table pg 7-20

5. CONTACTS

Part #	Description
P	Pin- Solder Cup
C	Pin-PC Tail
H	Pin, Solder Cup- Without Interfacial Seal
Y	Pin, PC Tail- Without Interfacial Seal

6. KEYING

Part #	A°	B°
A	150°	210°
B	75°	210°
C	95°	230°
D	140°	275°

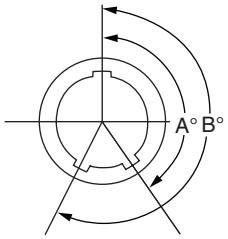

Receptacle View

Note: Please contact the factory directly for a listing of tooled interfacial seals for the hermetically sealed connectors.
Please note, Amphenol standard 2M hermetic connector are provided less the interfacial seal.
Please contact the factory for availability on the interfacial seal.

2M804 Push-Pull Rear Panel Jam Nut Hermetic

2M804-006-07

Micro38999

2M804-006-07

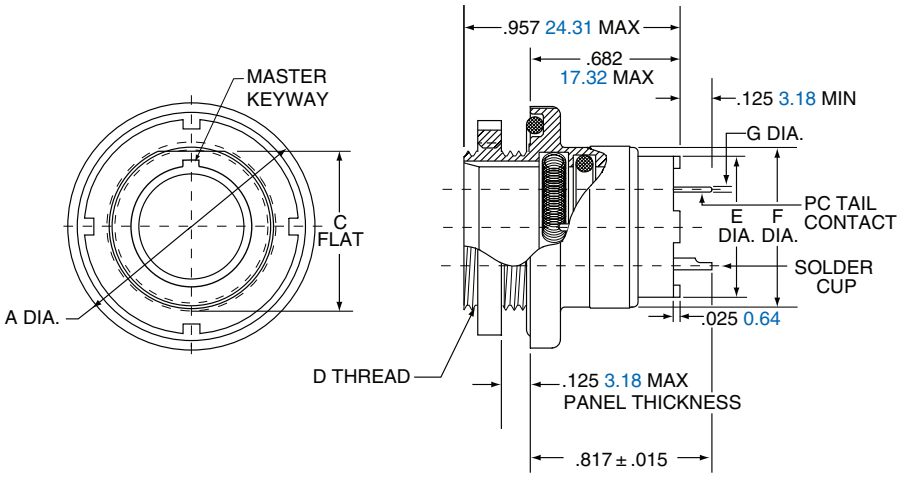

Shell Size	A Dia.		C Flat		D Thread UN-2A	E Dia.		F Dia.		G PC Tail Dia.
	in.	mm.	in.	mm.		in.	mm.	in.	mm.	
5	.773	19.63	.414	10.52	.4375-32	.274	6.96	.448	11.38	**#23** .018/.022 0.46/0.56
6	.833	21.16	.468	11.89	.5000-32	.329	8.36	.513	13.03	
7	.903	22.94	.593	15.06	.6250-28	.431	10.95	.573	14.55	**#20/20HD** .025/.027 0.64/0.69
8	.958	24.33	.593	15.06	.6250-28	.493	12.52	.596	15.14	
9	.998	25.35	.653	16.59	.6875-28	.551	14.00	.691	17.55	**#16** .060/.064 1.52/1.63
10	1.083	27.51	.721	18.31	.7500-28	.619	15.72	.728	18.49	
12	1.183	30.05	.843	21.41	.8750-28	.703	17.86	.883	22.43	**#12** .092/.096 2.34/2.44
14	1.323	33.60	.968	24.59	1.0000-28	.863	21.92	1.003	25.48	
15	1.373	34.87	1.036	26.31	1.0625-20	.913	23.19	1.063	27.00	

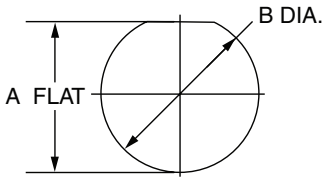

JAM NUT PANEL CUTOUT

Shell Size	A Flat		B Dia.	
	in. ±.002	mm. ± 0.05	in. ±.005	mm. ± 0.13
5	.423	10.74	.448	11.38
6	.475	12.07	.510	12.95
7	.602	15.29	.635	16.13
8	.602	15.29	.635	16.13
9	.663	16.84	.698	17.73
10	.729	18.82	.760	19.30
12	.851	21.62	.885	22.48
14	.976	24.79	1.010	25.65

2M804 Front Panel Jam Nut Hermetic

2M804-006-00

2M804-006-00

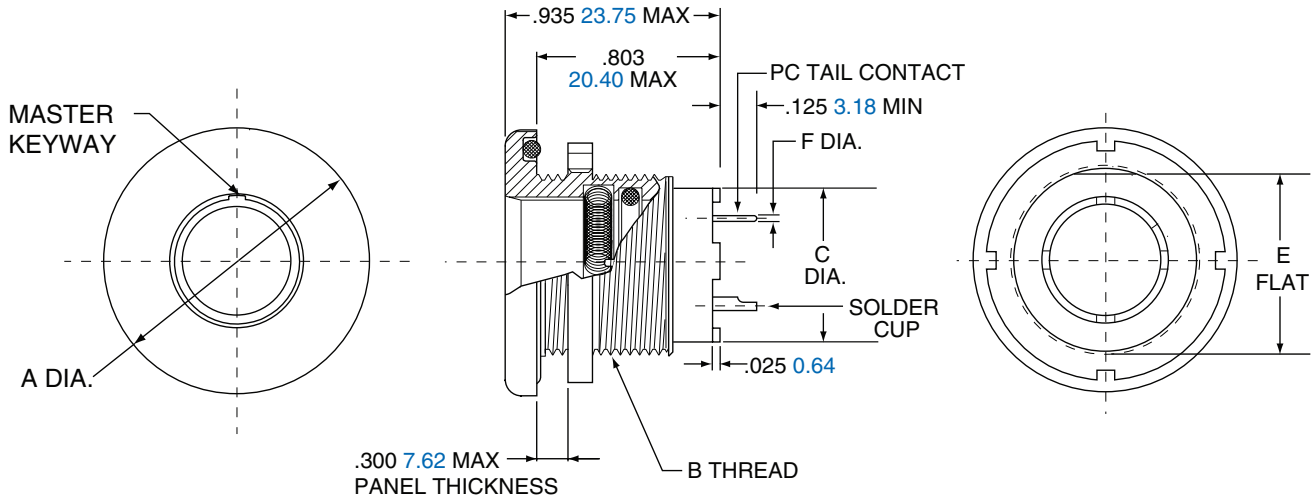

Shell Size	A Dia.		B Thread UN-2A	C Dia.		E Flat.		F PC Tail Dia.
	in.	mm.		in.	mm.	in.	mm.	
5	.830	21.08	.5000-32	.274	6.96	.470	11.94	**#23** .018/.022 0.46/0.56
6	.884	22.45	.5625-32	.329	8.36	.529	13.44	
7	.994	25.25	.6875-28	.431	10.95	.663	16.84	**#20/20HD** .025/.027 0.64/0.69
8	.994	25.25	.6875-28	.493	12.52	.663	16.84	
9	1.073	27.25	.7500-28	.551	14.00	.719	18.26	**#16** .060/.064 1.52/1.63
10	1.138	28.91	.8125-28	.619	15.72	.778	19.76	
12	1.338	33.99	1.0000-28	.703	17.86	.969	24.61	**#12** .092/.096 2.34/2.44
14	1.388	35.26	1.0625-20	.863	21.92	1.019	25.88	
15	1.453	36.91	1.1250-28	.913	23.19	1.113	28.27	

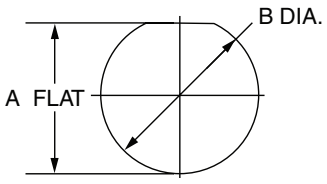

JAM NUT PANEL CUTOUT

Shell Size	A Flat		B Dia.	
	in. ±.002	mm. ± 0.05	in. ±.005	mm. ± 0.13
5	.477	12.12	.510	12.95
6	.537	13.64	.635	16.13
7	.670	17.02	.635	16.13
8	.670	17.02	.698	17.73
9	.727	18.47	.760	19.30
10	.787	19.81	.885	22.48
12	.977	24.82	1.010	25.65
14	1.027	26.09	1.073	27.25
15	1.120	28.45	1.135	28.83

2M803 Hermetic

Ordering Guide for 2M803-006 Receptacles

2M803 Series of Hermetic Receptacles provide superior sealing of 1x10-8 cc/second helium leak rate and are 100% tested prior to shipping. This superior sealing is accomplished through the use of glass insulator fused to stainless steel shells and iron alloy contacts.

2M803 FEATURES INCLUDE:

- Low profile shells for minimum box protrusion
- Shell Standoffs for PC Board washout
- Non-removable PC and/or Solder cup contacts
- Hermetic Sealing

1.	2.	3.	4.	5.	6.
SERIES	**SHELL SIZE**	**SERVICE CLASS**	**SHELL SIZE-INSERT AGGMT**	**CONTACTS**	**KEYING**
2M803-006	**-07**	**Z1**	**6-7**	**P**	**A**

Example Part Number

1. Series

Part #	Description
2M803-006	Hermetic Receptacles with PCB Contacts or Solder Cup Contacts

2. Shell Size

Part #	Desciption
-02	Flange Mount
-07	Jam Nut

3. Service Class

Material	Part #	Description	
STAINLESS STEEL	**Z1**	Passivated	
	ZL	Electrolytic Nickel	

4. Shell Size-Insert Arrangement

See Table pg 7-20

5. Contacts

Part #	Description
P	Pin- Solder Cup
C	Pin-PC Tail
H	Pin, Solder Cup- Without Interfacial Seal
Y	Pin, PC Tail- Without Interfacial Seal

6. Keying

Part #	A°	B°
N (NORMAL)	150°	210°
X	75°	210°
Y	95°	230°
Z	140°	275°

Note: Please contact the factory directly for a listing of tooled interfacial seals for the hermetically sealed connectors.

Please note, Amphenol standard 2M hermetic connector are provided less the interfacial seal. Please contact the factory for availability on the interfacial seal.

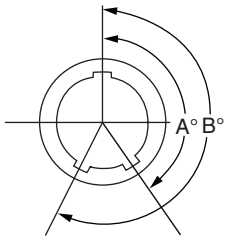

Receptacle View

2M803 Hermetic

Flange Mount and Jam Nut 2M803-006-02 and -07

2M803-006-02

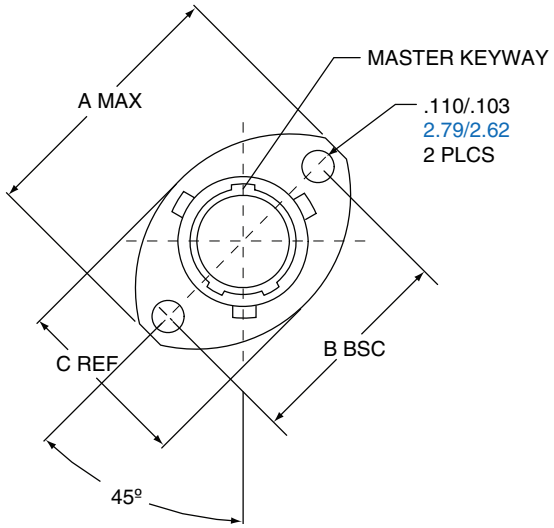

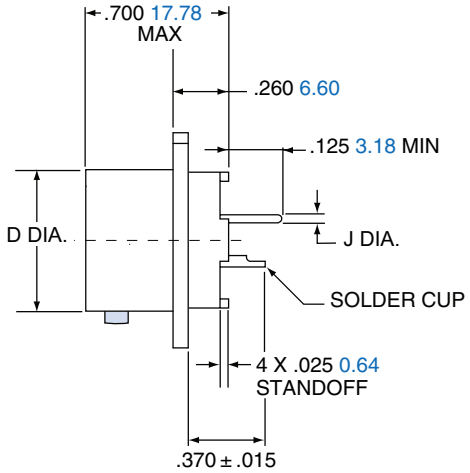

2M803-006-07

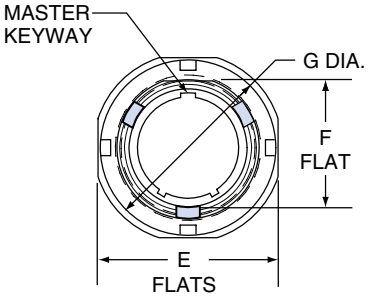

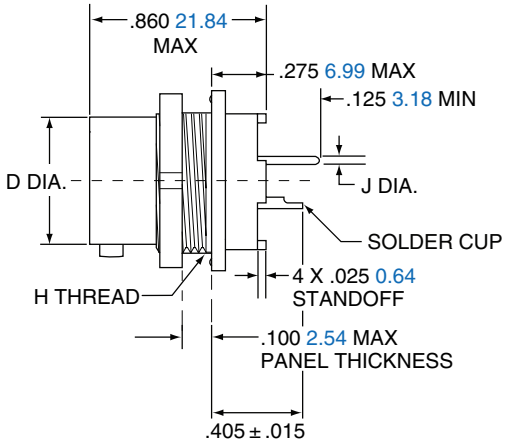

Shell Size	A Max.		B BSC.		C Ref.		D Dia.		E Flats		F Flat		G Dia.		H Thread	J PC Tail Dia.
	in.	mm	in.	mm.	in.	mm	in.	mm.	in.	mm.	in.	mm.	in.	mm.		
5	.710	18.03	.513	13.03	.460	11.68	.300	7.62	.545	13.84	.350	8.89	.575	14.61	.3750-32 UNEF-2A	**#23** .018/.022 0.46/0.56
6	.788	20.02	.598	15.19	.522	13.26	.362	9.19	.595	15.11	.410	10.42	.635	16.13	.4375-28 UNEF-2A	
7	.895	22.73	.708	17.98	.590	14.99	.436	11.07	.723	18.36	.536	13.61	.755	19.18	.5625-32 UN-2A	**#20/20HD** .025/.027 0.64/0.69
8	1.154	29.31	.964	24.49	.665	16.98	.500	12.70	.790	20.07	.593	15.10	.830	21.08	.6250-28 UN-2A	
9	1.210	30.73	1.017	25.83	.721	18.31	.561	14.25	.790	20.07	.596	15.14	.830	21.08	.6250-28 UN-2A	
10	1.291	32.79	1.101	27.97	.795	20.19	.635	16.13	.925	23.51	.721	.721	.955	24.26	.7500-28 UN-2A	**#16** .060/.064 1.52/1.63
12	1.395	35.43	1.204	30.58	.874	22.20	.714	18.14	1.044	26.52	.845	21.46	1.078	27.38	.8750-28 UN-2A	
14	1.550	39.37	1.280	32.51	1.050	26.67	.865	21.97	1.230	31.24	1.022	25.96	1.264	32.11	1.0625-20 UN-2A	**#12** .092/.096 2.34/2.44
15	N/A	N/A	N/A	N/A	N/A	N/A	.924	23.47	1.287	32.69	1.093	27.76	1.322	33.58	1.1250-28 UN-2A	

2M801 Hermetic

Ordering Guide for Hermetic Receptacle 2M801-012

2M801 Series of Hermetic Receptacles provide superior sealing of $1x10^{-8}$ cc/second helium leak rate and are 100% tested prior to shipping. This superior sealing is accomplished through the use of glass insulator fused to stainless steel shells and iron alloy contacts.

2M801 FEATURES INCLUDE:

- Low profile shells for minimum box protrusion
- Shell Standoffs for PC Board washout
- Non-removable PC and/or Solder cup contacts
- Hermetic Sealing

1.	2.	3.	4.	5.	6.
SERIES	**SHELL SIZE**	**SERVICE CLASS**	**SHELL SIZE-INSERT AGGMT**	**CONTACTS**	**KEYING**
2M801-012	**-02**	**Z1**	**6-7**	**P**	**A**

Example Part Number

1. SERIES

Part #	Description
2M801-012	Hermetic Receptacles with Printed Circuit Board Contacts or Solder cup contacts

2. SHELL SIZE

Part #	Desciption
-02	Flange Mount
-03	Weld Mount (only available is Z1 finish)
-07	Jam Nut

3. SERVICE CLASS

Material	Part #	Description	RoHS
STAINLESS STEEL	**Z1**	Passivated	✓
	ZL	Electrolytic Nickel	✓
	ZB	Stainless Steel with Olive Drab Cadmium Finish	

4. SHELL SIZE-INSERT ARRANGEMENT

See Table pg 7-20

5. CONTACTS

Part #	Description
P	Pin- Solder Cup
C	Pin-PC Tail
H	Pin, Solder Cup- Without Interfacial Seal
Y	Pin, PC Tail- Without Interfacial Seal

6. KEYING

Part #	A°	B°
A (NORMAL)	150°	210°
B	75°	210°
C	95°	230°
D	140°	275°
E	75°	275°
F	95°	210°

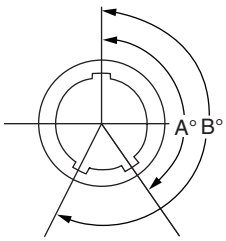

Receptacle View

Note: Please contact the factory directly for a listing of tooled interfacial seals for the hermetically sealed connectors.

2M801 Hermetic

Hermetic Jam Nut Connector 2M801-012-07

2M801-012-07

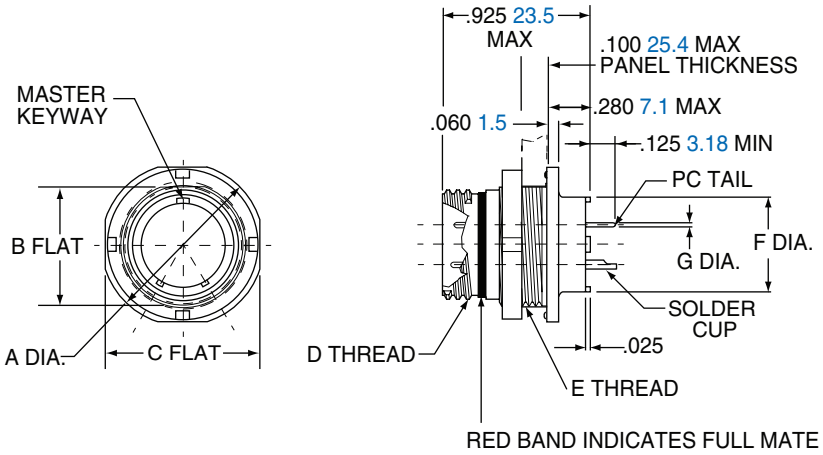

Shell Size	A Dia.		B Flat		C Flat		D Thread	UN-2A E Thread	F Dia.		G Dia. Tail Dia.
	in.	mm.	in.	mm.	in.	mm.			in.	mm.	
5	.575	14.61	.350	8.89	.545	13.84	.3125-.05P-.1L-2A	.3750-28	.244	6.20	**#23** .018/.022 0.46/0.56
6	.635	16.13	.410	10.41	.595	15.11	.3750-.05P-.1L-2A	.4375-28	.330	8.38	
7	.755	19.18	.536	13.61	.723	18.36	.4375-.05P-.1L-2A	.5625-32	.432	10.97	**#20/20HD** .024/.028 0.64/0.69
8	.755	19.18	.536	13.61	.723	18.36	.5000-.05P-.1L-2A	.5625-32	.493	12.52	
9	.830	21.08	.596	15.14	.790	20.07	.5625-.05P-.1L-2A	.6250-28	.551	14.00	
10	.890	22.61	.658	16.71	.855	21.72	.6250-.05P-.1L-2A	.6875-28	.620	15.75	**#16** .060/.064 1.52/1.63
13	1.078	27.38	.845	21.46	1.044	26.52	.8125-.1P-.2L-2A	.8750-28	.703	17.86	
16	1.264	32.11	1.022	25.96	1.230	31.24	1.0000-.1P-.2L-2A	1.0625-20	.863	21.92	**#12** .092/.096 2.34/2.44
17	1.325	33.66	1.096	27.84	1.290	32.77	1.0625-.1P-.2L-2A	1.125-28	.912	23.16	
21	1.625	41.28	1.345	34.16	1.577	40.06	1.3125-.1P-.2L-2A	1.375-28	1.170	29.72	

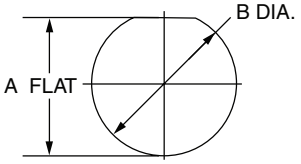

PANEL CUTOUT

Shell Size	A Flat		B Dia.	
	in. ±.002	mm. ± 0.05	in. ±.002	mm. ± 0.05
5	.356	9.04	.385	9.78
6	.416	10.57	.447	11.35
7	.542	13.77	.572	14.53
8	.542	13.77	.572	14.53
9	.602	15.29	.635	16.13
10	.666	16.92	.697	17.70
13	.851	21.62	.885	22.48
16	1.028	26.11	1.075	27.31
17	1.102	27.99	1.135	28.83
21	1.354	34.39	1.385	35.18

2M801 Dual-Start ACME Threads

Hermetic Square Flange Connector 2M801-012-02

2M801-012-02

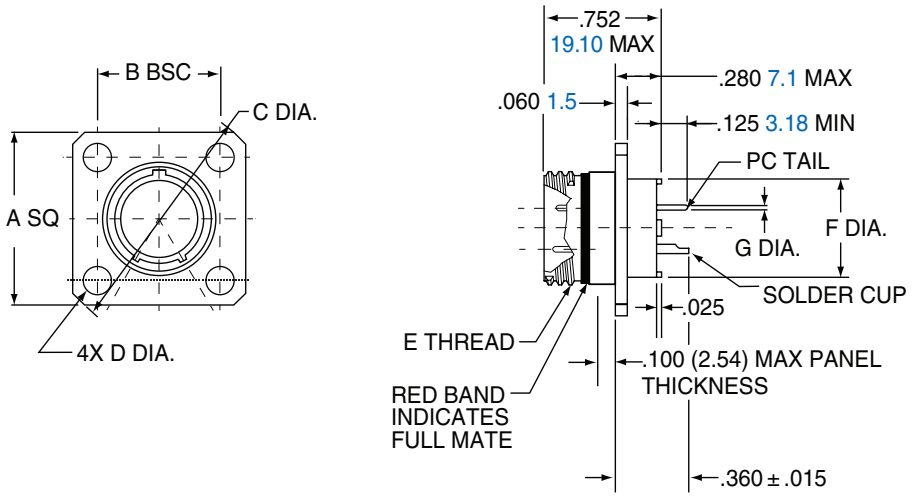

Shell Size	A SQ.		B BSC		C Dia.		D Dia.		E Thread	F Dia.		G. Dia. Tail Dia.
	in.	mm.	in.	mm.	in.	mm.	in. ±.003	mm. ± 0.08		in.	mm.	
5	.530	13.46	.363	9.22	.680	17.27	.093	2.36	.3125-.05P-.1L-2A	.244	6.20	**#23** .018/.022 0.46/0.56
6	.590	14.99	.423	10.74	.750	19.05	.093	2.36	.3750-.05P-.1L-2A	.330	8.38	
7	.650	16.51	.483	12.27	.850	21.59	.093	2.36	.4375-.05P-.1L-2A	.432	10.97	**#20/20HD** .025/.027 0.64/0.69
8	.712	18.08	.545	13.84	.938	23.83	.093	2.36	.5000-.05P-.1L-2A	.493	12.52	
9	.850	21.56	.607	15.42	1.125	28.58	.128	3.25	.5625-.05P-.1L-2A	.551	14.00	
10	.890	22.61	.670	17.02	1.188	30.18	.128	3.25	.6250-.05P-.1L-2A	.620	15.75	**#16** .060/.064 1.52/1.63
13	1.030	26.16	.812	20.62	1.375	34.93	.128	3.25	.8125-.1P-.2L-2A	.703	17.86	
16	1.219	31.96	.981	24.92	1.625	41.28	.128	3.25	1.0000-.1P-.2L-2A	.863	21.92	
17	1.280	32.51	1.060	26.92	1.700	43.18	.128	3.25	1.0625-.1P-.2L-2A	.912	23.16	**#12** .092/.096 2.34/2.44
21	1.430	36.32	1.205	30.61	1.940	49.28	.128	3.25	1.3125-.1P-.2L-2A	1.170	29.72	

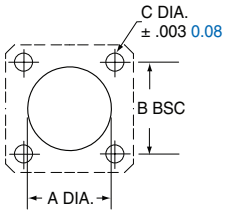

PANEL CUTOUT

Shell Size	A Dia.		B BSC		C Dia.	
	in.	mm.	in.	mm.	in.	mm.
5	.330	8.38	.363	9.22	.093	2.36
6	.390	9.91	.423	10.74	.093	2.36
7	.450	11.43	.483	12.27	.093	2.36
8	.510	12.95	.545	13.84	.093	2.36
9	.575	14.61	.607	15.42	.128	3.25
10	.640	16.26	.670	17.02	.128	3.25
13	.825	20.96	.812	20.65	.128	3.25
16	1.015	25.78	.981	24.92	.128	3.25
17	1.075	27.31	1.060	26.92	.128	3.25
21	1.325	33.66	1.205	30.61	.128	3.25

2M801 Dual-Start ACME Threads

Hermetic Weld Mount Connector 2M801-012-03

2M801-012-03

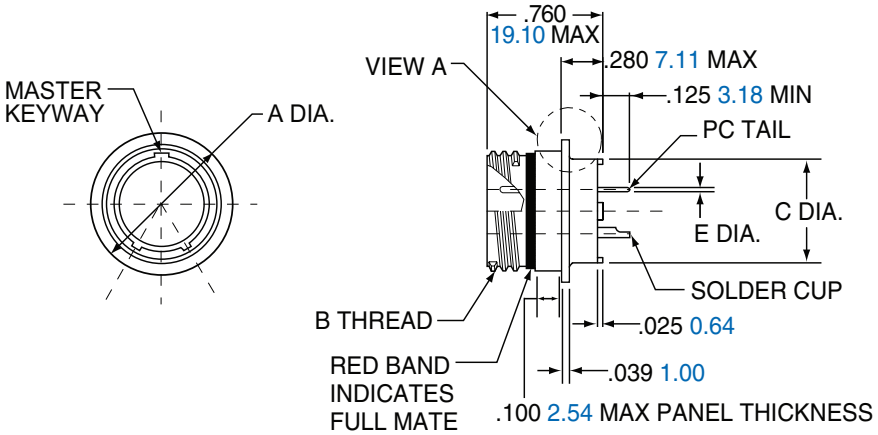

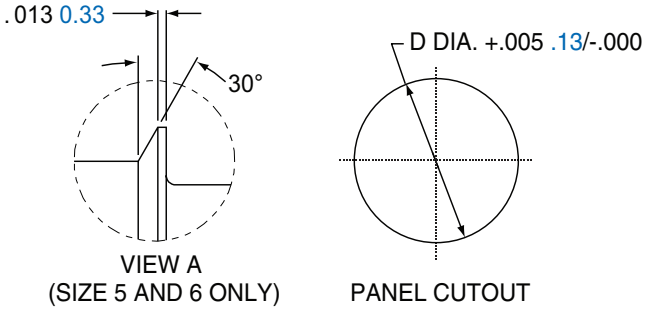

Shell Size	A Dia		B Thread	C Dia.		D Dia. Panel Cutout		G. PC Tail Dia.
	in.	mm.		in.	mm.	in.	mm.	
5	.395	10.03	.3125-.05P-.1L-2A	.244	6.20	.319	8.10	**#23** **.018/.022** 0.46/0.56
6	.455	11.56	.3750-.05P-.1L-2A	.330	8.38	.379	9.55	
7	.520	13.21	.4375-.05P-.1L-2A	.432	11.97	.438	11.13	
8	.580	14.73	.5000-.05P-.1L-2A	.493	12.52	.502	11.13	**#20/20HD** .024/.028 0.64/0.69
9	.645	16.38	.5625-.05P-.1L-2A	.551	14.00	.563	14.30	
10	.705	18.01	.6250-.05P-.1L-2A	.620	15.75	.627	11.13	**#16** .060/.064 1.52/1.63
13	.895	22.73	.8125-.1P-.2L-2A	.703	17.86	.814	20.68	
16	1.080	27.43	1.0000-.1P-.2L-2A	.863	21.92	1.007	25.58	**#12** .092/.096 2.34/2.44
17	1.145	29.08	1.0625-.1P-.2L-2A	.912	23.16	1.067	27.10	
21	1.395	35.43	1.3125-.1P-.2L-2A	1.170	29.72	1.320	33.53	

2M EMI/EMP Filtered Connectors

Advantages

For 2M Filtered High Density Connectors, Look to the leader...

Amphenol® EMI Protection Connectors have been designed and manufactured for over 45 years. Our EMI protection connectors offer the versatility of our standard 2M connectors with EMI protection to suit the demands of your application.

Advantages of Filter Connectors

- Reduction in overall weight and space with the elimination of external filtering
- Reduction in solder joints
- Fewer components equals a cost effective solution with increased reliability
- Eliminates radiated and conducted EMI from entering the box
- Perfect for retrofits or late design-in
- Can utilize standard connector packaging

Resources

Amphenol Aerospace Factory Direct: 607.563.5011
Filter Technical Support: FilterApps@Amphenol-aao.com

Quality

All filter connectors undergo extensive mechanical and electrical testing to ensure consistent, quality hardware.

Standard Electrical Tests

- 100% Insulation Resistance testing
- 100% Dielectric Withstanding Voltage testing
- 100% Capacitance testing at 1KHz

Special Tests/Processes Available

- Attenuation testing (through 100 MHz)
- Leakage inspection
- Thermal cycling/shock
- Burn-in
- De-gassing

AMPHENOL WILL WORK TO PROVIDE THE BEST SOLUTION IN STANDARD 2M PACKAGING FOR THE MOST COST EFFECTIVE SOLUTIONS AVAILABLE

Filtered 2M Attenuation Characteristics

Note: Below are typical capacitance values. Other capacitance values are available. Please consult Amphenol Aerospace for availability.

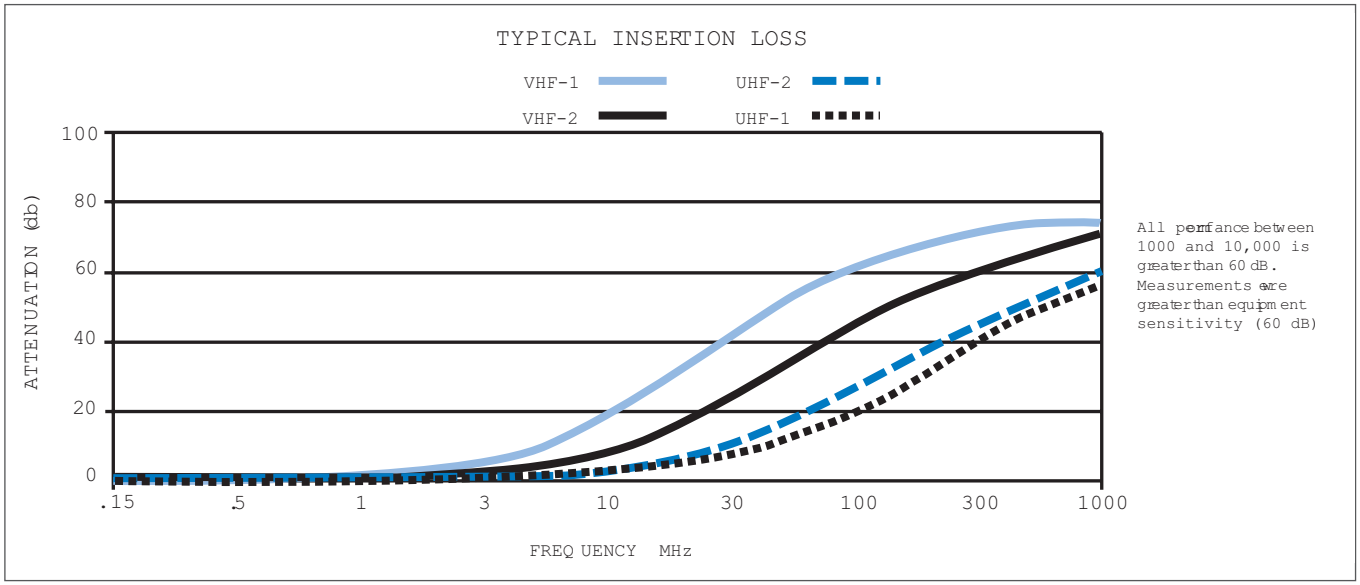

TYPICAL INSERTION LOSS (dB)
PER MIL-STD-220, 5 ADC, 25°C

Capacitance	1MHz	3MHz	10MHz	30MHz	100MHz	300MHz	1000MHz
375 pf UHF_1	0	0	1	8	16	–	–
750 pf UHF_2	0	0	3	10	19	–	–
2500 pf VHF_2	0	2	8	20	28	–	–
7000 pf VHF_1	5	9	17	23	40	–	–

Most filter attenuation curves and capacitance values are expressed at 25°C. However, temperature can affect the capacitance of a barium titanate filter element, affecting the insertion loss that the element will cause. In order to assist the user in anticipating the effect of various temperatures, the following charts applicable to Amphenol filter connectors utilizing VHF-1, VHF-2, UHF-1 and UHF-2 filters are provided. Please note that all insertion loss (attenuation) values given were measured with no load applied. The band designations refer to MIL-STD-2120.

VHF-1
Typical Capacitance = 7,000 pf Min. 4,900 pf Max. 12,000 pf
Band G, Type Pi

Temp.	Fco	1MHz	3MHz	10MHz	30MHz	100MHz	300MHz	1000MHz
–55°C	–	1	2	8	21	44	61	65
Room	1.27M	1	6	18	42	62	72	75
+125°C	–	0	2	9	24	45	62	64

Note: F_{co} = Cut-off Frequency

VHF-2
Typical Capacitance = 2,500 pf Min. 1,900 pf Max. 4,000 pf
Band E, Type Pi

Temp.	Fco	1MHz	3MHz	10MHz	30MHz	100MHz	300MHz	1000MHz
–55°C	–	0	2	7	17	40	58	71
Room	3.3M	0	2	8	24	46	61	71
+125°C	–	0	3	10	26	46	63	69

UHF-1
Typical Capacitance = 375 pf Min. 290 pf Max. 450 pf
Band B, Type Pi

Temp.	Fco	1MHz	3MHz	10MHz	30MHz	100MHz	300MHz	1000MHz
–55°C	–	0	0	1	6	21	43	58
Room	21.9M	0	0	1	8	18	42	56
+125°C	–	0	0	1	8	17	38	50

UHF-2
Typical Capacitance = 750 pf Min. 500 pf Max. 1,100 pf
Band C, Type Pi

Temp.	Fco	1MHz	3MHz	10MHz	30MHz	100MHz	300MHz	1000MHz
–55°C	–	0	0	3	9	25	46	61
Room	12.7M	0	0	3	10	28	46	61
+125°C	–	0	0	3	10	24	42	60

Please consult the Amphenol Circular Interconnects catalog 12-C Edition 4 for full Amphenol EMI/EMP Filter Protection information.

Micro38999

Page Guide

Contact/ Tools	J98
Assembly	J99-100
Plugs/ Tools	J101, 102
Strain Relief Clamp	J103, 104
Micro Band Adapter	J105-108
Enviromental Backshells	J109, 110
EMI Backshells	J111-114
Shortening Cap Backshell	J115, 116
Shrink Boots	J117, 118
Hex Jam Nut	J119
Flange Gasket	J120, 121
O Rings	J122

2M Accessories, Contacts, and tools

2M

2M Series Contacts and Tools

Crimp Contacts

Contact Size	Type	AMPS	Wire Size AWG	Part Number	Color Band 1st	Color Band 2nd	Color Band 3rd
#23	Pin	5	#22-#28	**2M809-001**	N/A	N/A	N/A
	Pin		#26-#30	**2M809-042***	Blue	N/A	N/A
	Socket		#22-#28	**2M809-002**	N/A	N/A	N/A
	Socket		#26-#30	**2M809-043***	Blue	N/A	N/A
#20HD	Pin	7.5	#20-#24	**2M809-204**	N/A	N/A	N/A
	Socket		#20-#24	**2M809-205**	N/A	N/A	N/A
#20	Pin	7.5	#20-#24	**M39029/58-363**	Orange	Blue	Orange
	Socket		#20-#24	**M39029/57-357**	Orange	Green	Violet
#16	Pin	13	#16-#20	**M39029/58-364**	Orange	Blue	Orange
	Socket		#16-#20	**M39029/57-358**	Orange	Green	Gray
#12	Pin	23	#12-#14	**M39029/58-365**	Orange	Blue	Green
	Socket		#12-#14	**M39029/57-359**	Orange	Green	White

*Special order please consult Amphenol-Aerospace for information.

Contact Tools

Contact Size	Tooling Part Numbers: Crimper	Positioner	Insertion/ Removal Number
#23	M22520/2-01	K1461-1* (Daniels)	DAK225-22* (Daniels Insertion Only)
			2M809-23R (Removal only)
#20HD	M22520/2-01	2M809-206	2M809-20HDR (Removal only)
#20	M22520/1-01	M22520/1-04	M81969/14-10
#16	M22520/1-01	M22520/1-04	M81969/14-03
#12	M22520/1-01	M22520/1-04	M81969/14-04

*Daniels Manufacturing Co. part number

Crimp Tensile Strength

Contact Size	Wire Gage	Silver or Tin Coated Copper Wire	Nickel Coated Copper Wire
#23, #20HD	#22	12	8
#23, #20HD	#24	8	6
#23	#26	5	3
#23	#28	3	2
#23	#30	1.5	1.5

Tensile Strength for size #23 and #20HD only
Values represent minimums and are in pounds

Series 2M Torque Values

Shell Size Series 2M801, 2M803	Shell Size Series 2M805	Coupling Torque In-LBs. Min.	Coupling Torque In-LBs. Max.	Coupling Torque N-m Min.	Coupling Torque N-m Max.	Jam Nut Tightening In-LBs. Min.	Jam Nut Tightening In-LBs. Max.	Jam Nut Tightening N-m Min.	Jam Nut Tightening N-m Max.	Backshell Tightening In-LBs. Min.	Backshell Tightening In-LBs. Max.	Backshell Tightening N-m Min.	Backshell Tightening N-m Max.
5	-	16	20	1.81	2.26	20	25	2.26	2.82	12	16	1.36	1.81
6	8	18	22	2.03	2.49	20	25	2.26	2.82	14	18	1.58	2.03
7	9	20	24	2.26	2.71	20	25	2.26	2.82	16	20	1.81	2.26
8	10	22	26	2.49	2.94	20	25	2.26	2.82	18	22	2.03	2.49
9	11	24	28	2.71	3.16	20	25	2.26	2.82	20	24	2.26	2.71
10 & 11	12 & 13	26	30	2.94	3.39	25	30	2.82	3.39	22	26	2.49	2.94
12 & 13	15	32	36	3.62	4.07	25	30	2.82	3.39	28	32	3.16	3.62
14 & 16	18	38	42	4.29	4.75	25	30	2.82	3.39	28	32	3.16	3.62
15 & 17	19 & 21	40	44	4.52	4.97	25	30	2.82	3.39	28	32	3.16	3.62
19 & 21	23	48	52	5.42	5.88	25	30	2.82	3.39	28	32	3.16	3.62

Wire Stripping

1. Strip wire to required length. (See Figure at right). When using hot wire stripping, do not wipe melted insulation material on wire strands; with mechanical strippers do not cut or nick strands.
2. See Table 1 for proper finished outside wire dimensions.
3. Twist strands together to form a firm bundle.
4. Insert stripped wire into contact applying slight pressure until wire insulation butts against wire well. Check inspection hole to see that wire strands are visible. If there are strayed wire strands, entire wire end should be re-twisted. When wire is stripped and properly installed into contact, the next step is to crimp the wire inside the contact by using the proper crimping tool.

Stripping Dimensions

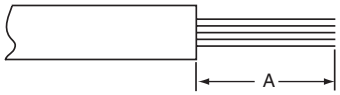

Wire Size	A
23	.115 (2.92)
20/20HD	.188 (4.77)
16	.188 (4.77)
12	.188 (4.77)

Table 1

Contact Size	Wire Dimension (inches)**	
	Min.	Max.
10	.135	.162
12	.097	.142
16	.065	.109
20/20HD	.040	.077
23	.025	.048

** Min. diameters to insure moisture proof assembly; max. diameters to permit use of metal removal tools.

Crimping

See table on preceding page for more information on crimp contacts, contact tools, and crimp tensile strength

1. Insert stripped wire into contact crimp pot. Wire must be visible through inspection hole.
2. Using correct crimp tool and locator, cycle the tool once to be sure the indentors are open, insert contact and wire into locator. Squeeze tool handles firmly and completely to insure a proper crimp. The tool will not release unless the crimp indentors in the tool head have been fully actuated.
3. Release crimped contact and wire from tool. Be certain the wire is visible through inspection hole in contact.

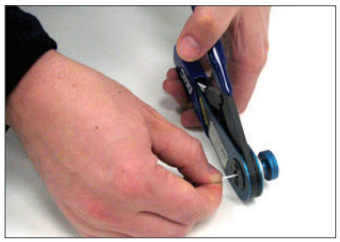

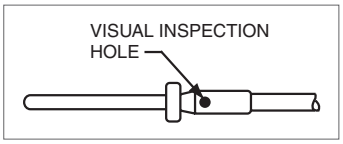

Examples of M22520 Series Crimping Tools:
Shown top: tool used for small size 23 contacts.
Shown bottom: tool used for size 20, 16 or 12 contacts and has a positioner that can be dialed for each contact size.

Contact Insertion

1. First remove hardware from the plug and receptacle and slide the hardware over wires in proper sequence.

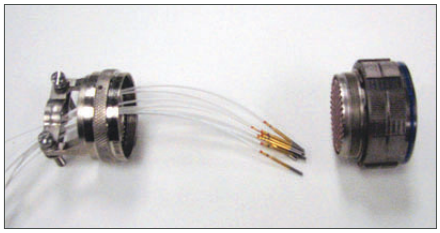

Note: All plastic tools are double-ended. The colored side is the insertion tool and the white side is the removal tool.

2. Use proper plastic or metal insertion tool for corresponding contact. (Consult Insertion Tool table on preceding page). Slide correct tool (with plastic tool use colored end) over wire insulation and slide forward until tool bottoms against rear contact shoulder.

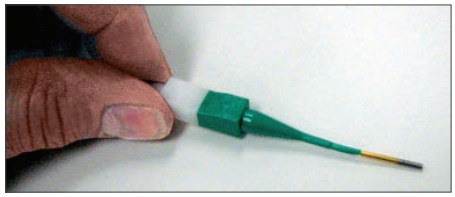

Plastic tool with contact in proper position.

Metal tool with contact.

3. Next align the tool and contact up to the properly identified cavity at rear of connector plug. Use firm, even pressure; do not use excessive pressure. It is recommended to start at the center cavity. Contact must be aligned with grommet hole and not inserted at an angle. Push forward until contact is felt to snap into position within insert.

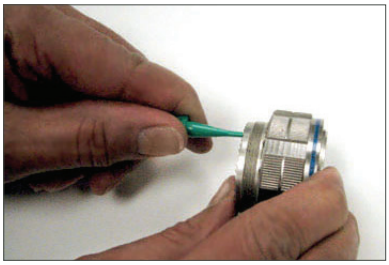

Continued on next page.

CONTACT INSERTION, CONT.

4. Remove tool and pull back lightly on wire, making sure contact stays properly seated and isn't dragged back with the tool. Repeat operation with remainder of contacts to be inserted, beginning with the center cavity and working outward in alternating rows.

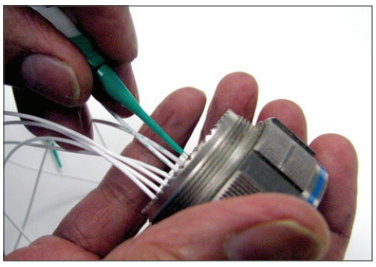

CAUTION: when inserting or removing contacts, do not spread or rotate tool tips.

5. After all contacts are inserted, fill any empty cavities with wire sealing plugs.

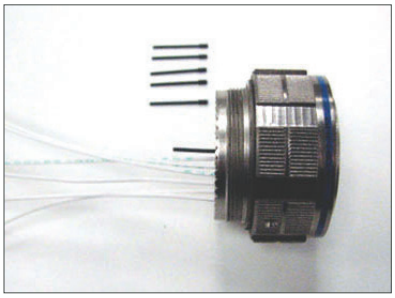

6. Reassemble plug or receptacle hardware slide forward and tighten using connector pliers. Connector holding tools are recommended while tightening back accessories. When using strain relief, center wires at bar clamp. Slide clamp grommet into position and tighten clamp bar screws. When tightening screws, pressure should be applied in the same direction that clamp is threaded to rear threads of connector. When not using clamp grommet, build up wire bundle with vinyl tape so clamp bar will maintain pressure on wires.

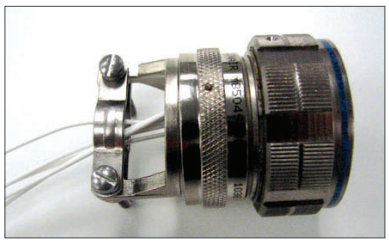

CONTACT REMOVAL

1. Remove hardware from plug or receptacle and slide hardware back along wire bundle.

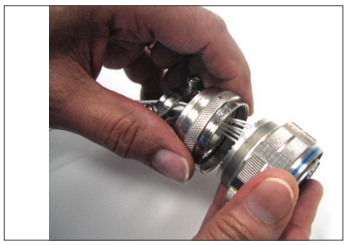

2. Use proper plastic or metal removal tool for corresponding contact. Slide correct size tool over wire insulation.

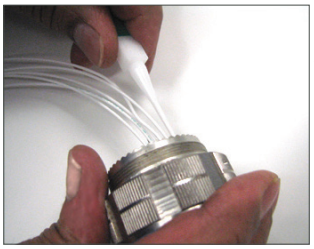

Use white end of plastic tool fo removal of contacts.

3. Insert plastic or metal removal tool into contact cavity until tool tips enter rear grommet and come to a positive stop. Hold tool tip firmly against positive stop on contact shoulder. Grip wire and simultaneously remove tool and contact. (On occasion, it may be necessary to remove tool, rotate 90° and reinsert.)

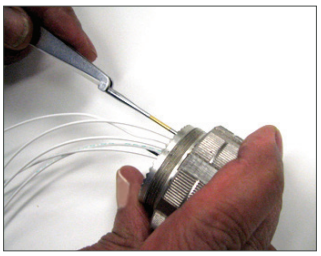

Removal of contacts with metal tool.

CAP ATTACHMENT TO JAM NUT RECEPTACLE

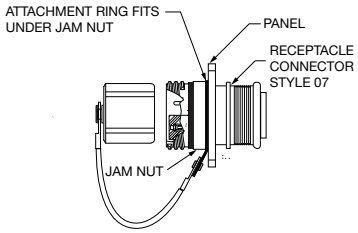

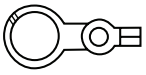

Solid Ring

CAP ATTACHMENT TO PANEL

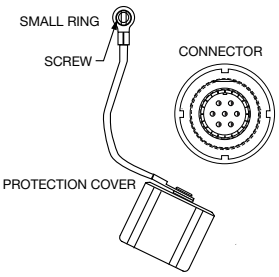

Small Ring for Attaching Receptacle Covers to a Panel with a Screw

CAP ATTACHMENT TO CABLE ASSEMBLY

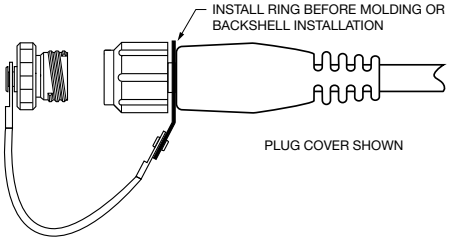

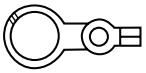

Solid Ring

REMOVABLE CAP ATTACHMENT TO CABLE

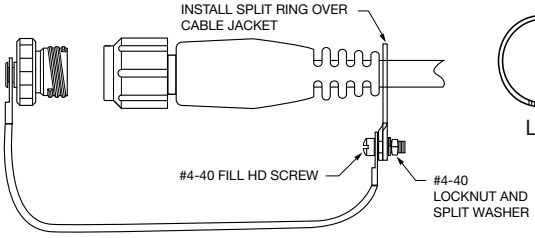

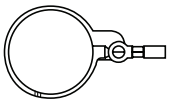

Large Split Ring designed for attaching covers to cables

2M Series Contacts and Tools

Grommet Sealing Plugs, Spanner Tool & Holding Tool

Micro38999

Grommet Sealing Plugs

Size	Color	Part Number	Military Part Number
#23	Black	2M809-155	MS27488-22-2
#20	Red	2M859-012	MS27488-20-2
#16	Green	2M859-013	MS27488-16-2
#12	Orange	2M859-014	MS27488-12-2

Spanner Tool for Tightening Series 2M Jam Nuts

Shell Size	Holding Tool Part Number (Add P or R)				
	Series 2M801	Series 2M803	Series 2M804 Style 07	Series 2M804 Style 00	Series 2M805
5	2M600-146-02	2M600-137-05	2M600-146-03	2M600-147-05	
6	2M600-146-03	2M600-137-06	2M600-146-04	2M600-147-06	
7	2M600-146-05	2M600-137-07	2M600-146-06	2M600-147-07	
8	2M600-146-05	2M600-137-08	2M600-146-06	2M600-147-07	2M600-154-08
9	2M600-146-06	2M600-137-09	2M600-146-07	2M600-147-09	2M600-154-09
10	2M600-146-07	2M600-137-10	2M600-146-08	2M600-147-10	2M600-154-09
11					2M600-154-11
12		2M600-137-12	2M600-141-10	2M600-147-12	2M600-154-12
13	2M600-146-10				
14		2M600-137-14	2M600-141-12	2M600-147-14	
15		2M600-137-15	2M600-141-13	2M600-147-15	2M600-154-15
16	2M600-146-13				
17	2M600-146-14				
18					2M600-154-18
19					2M600-154-19
21	2M600-146-17				
23					2M600-154-23

Connector Holding Tool for Tightening Backshells Accessories

Shell Size	Holding Tool Part Number (Add P or R)			
	Series 2M801 •	Series 2M803*	Series 2M804 ×	Series 2M805 •
5	2M600MM005-05	2M600-140-5	2M600-141-5	
6	2M600MM005-06	2M600-140-6	2M600-141-6	
7	2M600MM005-07	2M600-140-7	2M600-141-7	
8	2M600MM005-08	2M600-140-8	2M600-141-8	2M600-155-8
9	2M600MM005-09	2M600-140-9	2M600-141-9	2M600-155-9
10	2M600MM005-10	2M600-140-10	2M600-141-10	2M600-155-10
11				2M600-155-11
12		2M600-140-12	2M600-141-12	2M600-155-12
13	2M600MM005-13			
14		2M600-140-14	2M600-141-14	
15		2M600-140-15	2M600-141-15	2M600-155-15
16	2M600MM005-16			
17	2M600MM005-17			
18				2M600-155-18
19				2M600-155-19
21	2M600MM005-21			
23				2M600-155-23

*Add P for Plug holder or R for receptacle holder, followed by polarizing position (N, X, Y, Z)

• Add P for Plug holder or R for Receptacle holder, followed by polarizing position (A, B, C, D).

× Add P for Plug holder or R for Receptacle holder.

2M Series Contacts and Tools

Micro Band Shield Termination Tool

Micro Band Shield Termination System:

Micro Band Termination: For assembling cables to overmolded style 2M connectors or backshells, the Micro Band System offers quick termination of cable shields and flexibility to be utilized on a wide range of parts with just one band size. These rugged straps have passed numerous hazardous environmental testing, including shock and vibration. Approved for use in military and aerospace applications.

MATERIALS:
Micro Band Installation Tool. Use with .120" (3.05 mm) wide bands. 6.75 inches (172 mm.) length, 1.2 pounds (0.6 Kg.)

Micro Band, .120" (3.05 mm) wide. Available in two lengths, flat or pre-coiled. Stainless steel.

Description	Part Number
Micro Band Installation Tool	**2M600-061**

Length		Part Number	Accommodates Diameter	
inch	mm	Flat	inch	mm
8.125	206.38	**2M600-057**	.88	22.35
14.250	361.95	**2M600-083**	1.88	47.75

Micro Band Shield Termination Instructions:

1. Prepare cable braid for termination process (Figure 1).
2. Push braid forward over adapter retention lip to the adapter incline point (or .4" [10.2mm] minimum braid length). Milk braid as required to remove slack and winsure a snug fit around the shield termination area (Figure 2).
3. Prepare the band in the following manner:
   IMPORTANT: Due to connector/adapter circumference, it may be necessary to prepare the band around the cable or retention area.
   A. Roll band through the buckle slot twice. (Band must be double-coiled!)
   B. Pull on band until mark (▷|) is within approximately .250 inch (6.4mm) of buckle slot (Figure 3). The band may be tightened further if desired.
   NOTE: Prepared band should have this (▷|) mark visible approximately where shown in Figure 3.

   Shield Termination Clamping Process (Figures 4 thru 8)
   NOTE: To free tool handles, squeeze handles together and move holding clips to center of tool.

4. Squeeze gray gripper release lever and insert band into the front end opening of the tool. (Circular portion of looped band must always face downward.)
5. Aligning the band and tool with the shield termination area, squeeze blue pull-up handle repeatedly in full strokes until it locks against tool body. (This indicates the band is compressed to the tool precalibrated tension.)
   NOTE: To loosen or remove band before locking and cut-off, squeeze gray grip per release lever on tool and pull band out. To loosen or remove band after blue pull-up handle locks against tool body, squeeze pull-up handle and push tension release lever on top of tool forward. Let tension handle return to original position and use the gripper release lever to remove band.
6. Complete the clamping process by squeezing the black cut-off handle to form lock and trim excess band.
   To remove excess band from tool, squeeze gray gripper release handle, pull out and dispose.
   Inspect shield termination.

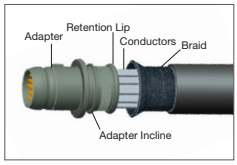

Fig. 1

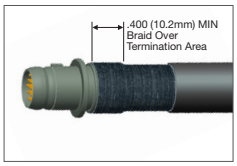

Fig. 2

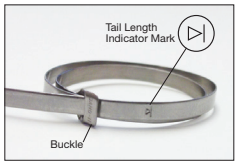

Fig. 3

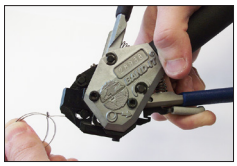
Fig. 4

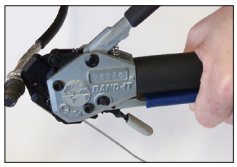
Fig. 5

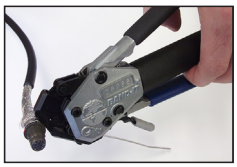
Fig. 6

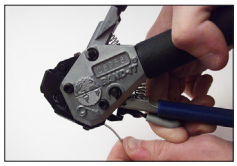
Fig. 7

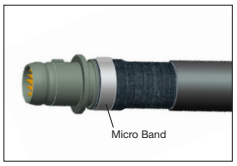

Fig. 8

2M Strain Relief Clamp Ordering Information

2M620MS064 and 2M620MS065

Micro38999

1.	2.	3.
PART NUMBER	**SERVICE CLASS**	**SIZE CODE**
2M620MS06X	**-M**	**07**

1. PART NUMBER	
Part #	Description
2M620MS065	Rotatable Coupling
2M620MS064	Direct Coupling

2. SERVICE CLASS			
Material	Part #	Description	RoHS
ALUMINUM	**-C**	Black Anodized (Non-conductive)	✓
	-M	Electroless Nickel	✓
	-NF	Olive Drab Cadmium	
	-MT	Durmalon (Ni PTFE)	✓
	-ZN	Olive Drab Zinc Nickel	✓
	-ZNU	Black Zinc Nickel	✓
STAINLESS STEEL	**-Z1**	Passivated	✓
	-ZL	Electrolytic Nickel	✓

3. SIZE CODE				
			Shell Size	
Size Code	UNEF-2B Thread Size	Cable Entry Diameter	Series 2M801, 2M803, 2M804	Series 2M805
05	.2500-32 UNEF	.11	5	
06	.3125-32 UNEF	.17	6	
11	.3750-32 UNEF	.17		8
07	.4375-28 UNEF	.23	7	9
08	.5000-28 UNEF	.30	8	10
09	.5625-24 UNEF	.30	9	11
10	.6250-24 UNEF	.36	10	12
12	.6875-24 UNEF	.42	12, 13	
13	.7500-20 UNEF	.42		15
14	.9375-20 UNEF	.48	14, 15, 16, 17	18, 19
15	.9375-20 UNEF	.61	14, 15, 16, 17	18, 19
17	1.1875-18 UNEF	.86	21	23

MATERIALS	
Nut, Clamp, and Saddles	Aluminum Alloy 6061-T6 or 300 Series SST
Hardware	300 Series Stainless Steel

2M Strain Relief Clamp Dimensions

2M620MS064 and 2M620MS065

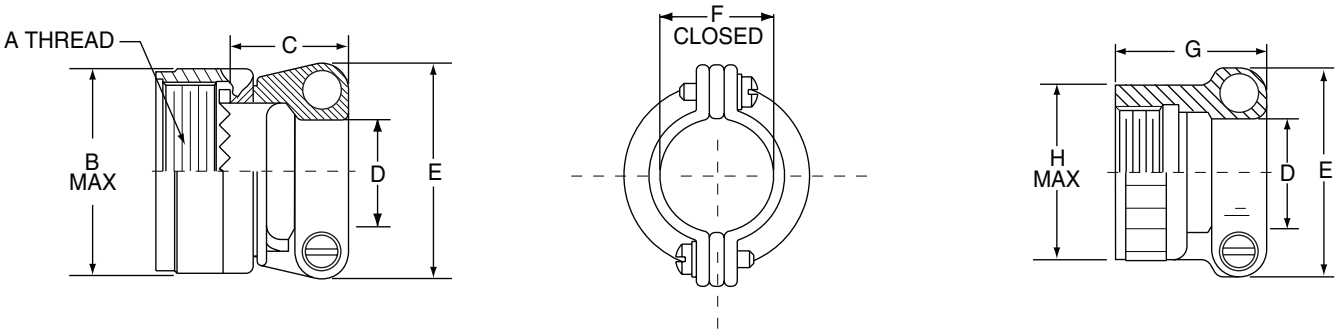

Size Code	A Threads UNEF-2B	B Max.		C Max.		D DIA.		E		F		G Max		H Max.	
		in.	mm.	in.	mm.	in. ± .015	mm. ± 0.38	in. ± .015	mm. ± 0.38	in. ± .030	mm. ± 0.76	in.	mm.	in.	mm.
05	.2500-32	.470	11.94	.688	17.48	.119	3.02	.496	12.60	.110	2.79	.625	15.88	.350	8.89
06	.3125-32	.530	13.46	.688	17.48	.182	4.62	.582	14.78	.170	4.32	.625	15.88	.415	10.54
11	.3750-32	.570	14.48	.688	17.48	.182	4.62	.582	14.78	.170	4.32	.625	15.88	.465	11.81
07	.4375-28	.637	16.18	.688	17.48	.244	6.20	.656	16.66	.230	5.08	.688	17.48	.530	13.46
08	.5000-28	.700	17.78	.688	17.48	.307	7.80	.726	18.44	.300	7.62	.688	17.48	.595	15.11
09	.5625-24	.758	19.25	.750	19.05	.307	7.80	.726	18.44	.300	7.62	.750	19.05	.650	16.51
10	.6250-24	.819	20.80	.750	19.05	.369	9.37	.885	22.48	.360	9.14	.875	22.23	.715	18.16
12	.6875-24	.896	22.76	.750	19.05	.432	10.97	.952	24.18	.420	10.67	.875	22.23	.785	19.94
13	.7500-20	.930	23.62	.750	19.05	.432	10.97	.952	24.18	.420	10.67	.875	22.23	.830	21.08
14	.9375-20	1.137	28.88	.750	19.05	.494	12.55	1.018	25.86	.480	12.19	1.000	25.40	1.020	25.91
15	.9375-20	1.137	28.88	.750	19.05	.619	15.72	1.148	29.16	.610	15.49	1.000	25.40	1.020	25.19
17	1.1875-18	1.397	35.48	.750	19.05	.869	22.07	1.400	35.56	.860	21.84	1.125	28.58	1.280	32.51

2M Thread-On Micro Band Adapter

Ordering Information 2M440MS135, MK135 and ML135

Micro38999

1. PART NUMBER	2. SERVICE CLASS	3. SIZE CODE	4. CABLE ENTRY SIZE	5. LENGTH	6. BAND OPTIONS
2M440MX135	-M	07	05	-6	K

Omit for no band supplied
K adapter is supplied with **Micro Band** shield termination band, pre-coiled

1. PART NUMBER

Part #	Description
2M440MS135	Straight Entry
2M440MK135	45° Entry
2M440ML135	90° Entry

2. SERVICE CLASS

Material	Part #	Description	RoHS
ALUMINUM	-C	Black Anodized (Non-conductive)	✓
	-M	Electroless Nickel	✓
	-NF	Olive Drab Cadmium	
	-MT	Durmalon (Ni PTFE)	✓
	-ZN	Olive Drab Zinc Nickel	✓
	-ZNU	Black Zinc Nickel	✓
STAINLESS STEEL	-Z1	Passivated	✓
	-ZL	Electrolytic Nickel	✓

3. SIZE CODE

05	.2500-32
06	.3125-32
11	.3750-32
07	.4375-28
08	.5000-28
09	.5625-24
10	.6250-24
12	.6875-24
13	.7500-20
14	.9375-20
17	1.1875-18

4. CABLE ENTRY SIZE

02	.125	05-17
03	.188	05-17
04	.250	06-17
05	.312	07-17
06	.375	07-17
07	.438	08-17
08	.500	09-17
09	.562	10-17
10	.625	12-17
11	.688	14-17
12	.750	14-17
13	.812	14-17
14	.875	14-17

5. LENGTH

Straight Entry
2M440MS135 Only

Length Code	Length (inches)
-6	.750
-7	.875
-8	1.000
-9	1.125
-10	1.250
-11	1.375
-12	1.500
-13	1.625
-14	1.750
-15	1.875
-16	2.000
-17	2.125
-18	2.250
-19	2.375
-20	2.500

Specify Length in increments of .125 inches (3.18 mm.)

SHELL SIZE

Accessory Thread	Size Code	Series 2M801	Series 2M803	Series 2M804	Series 2M805
.2500-32 UNEF-2B	**05**	5	5	5	
.3125-32 UNEF-2B	**06**	6	6	6	
.3750-32 UNEF-2B	**11**				8
.4375-28 UNEF-2B	**07**	7	7	7	9
.5000-28 UNEF-2B	**08**	8	8	8	10
.5625-24 UNEF-2B	**09**	9	9	9	11
.6250-24 UNEF-2B	**10**	10	10	10	12
.6875-24 UNEF-2B	**12**	13	12	12	
.7500-20 UNEF-2B	**13**				15
.9375-20 UNEF-2B	**14**	16,17	14, 15	14, 15	18, 19
1.1875-18 UNEF-2B	**17**	21			23

MATERIALS

Nut, Adapter	Aluminum Alloy or 300 Series SST
Band	300 Series SST
O-Ring	Silicone Elastomer

2M Thread-On Micro Band Adapter

2M440MS135, MK135 and ML135

Size Code	A Threads UNEF-2B	B Max		C Max.		D Max.		E Max.		F Max.	
		in.	mm.	in.	mm.	in.	mm.	in.	mm.	in.	mm.
05	.2500-32	.470	11.94	.530	13.46	.660	16.76	.630	16.00	.780	19.81
06	.3125-32	.530	13.46	.550	13.97	.670	17.02	.660	16.76	.790	20.27
11	.3750-32	.570	14.48	.560	14.22	.680	17.27	.680	17.27	.810	20.57
07	.4375-28	.637	16.18	.570	14.48	.690	17.53	.700	17.48	.830	21.08
08	.5000-28	.700	17.78	.580	14.73	.700	17.78	.740	18.80	.860	21.84
09	.5625-24	.758	19.25	.590	14.99	.710	18.03	.770	19.56	.890	22.61
10	.6250-24	.819	20.80	.610	15.49	.730	18.54	.800	20.32	.920	23.37
12	.6875-24	.896	22.76	.640	16.26	.750	19.05	.840	21.34	.970	24.64
13	.7500-20	.930	23.62	.660	16.76	.770	19.56	.880	22.35	1.020	25.91
14	.9375-20	1.137	28.88	.690	17.53	.800	20.32	.950	24.13	1.090	27.69
17	1.1875-18	1.387	35.23	.720	18.29	.830	21.08	1.010	25.65	1.160	29.46

STRAIGHT ENTRY ROTATABLE COUPLING 2M440MS135

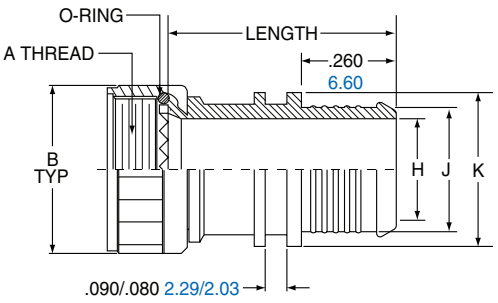

CABLE ENTRY							
Cable Entry Code	H Dia.		J Dia.		K Dia.		Use With Size Codes
	in. ± .015	mm. ± 0.38	in. ± .015	mm. ± 0.38	in. ± .015	mm. ± 0.38	
02	.125	3.18	.164	4.17	.266	6.76	05-14
03	.188	4.78	.227	5.77	.329	8.36	05-14
04	.250	6.35	.289	7.34	.391	9.93	06-14
05	.312	7.92	.351	8.92	.453	11.51	07-14
06	.375	9.53	.414	10.52	.516	13.11	07-14
07	.438	11.13	.477	12.12	.579	14.71	08-14
08	.500	12.70	.539	13.69	.641	16.28	09-14
09	.562	14.27	.601	15.27	.703	17.86	10-14
10	.625	15.88	.664	16.87	.766	19.46	12-14
11	.688	17.48	.727	18.47	.829	21.06	14
12	.750	19.05	.789	20.04	.891	22.63	14
13	.812	20.62	.851	21.62	.953	24.21	14
14	.875	22.23	.914	23.22	1.016	25.81	14

45º ENTRY ROTATABLE COUPLING 2M440MK135

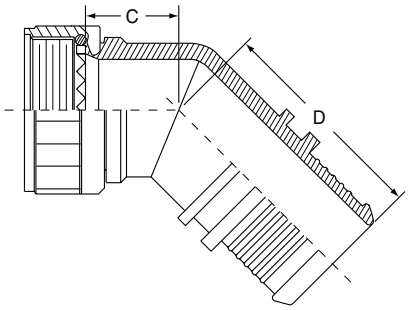

CONNECTOR SHELL SIZE			
Size Code	A Threads	Shell Size	
		Series 2M801, 2M803, 2M804	Series 2M805
05	.2500-32 UNEF-2B	5	
06	.3125-32 UNEF-2B	6	
11	.3750-32 UNEF-2B		8
07	.4375-28 UNEF-2B	7	9
08	.5000-28 UNEF-2B	8	10
09	.5625-24 UNEF-2B	9	11
10	.6250-24 UNEF-2B	10	12
12	.6875-24 UNEF-2B	12, 13	
13	.7500-20 UNEF-2B		15
14	.9375-20 UNEF-2B	14, 15, 16, 17	18, 19
17	1.1875-18 UNEF-2B	21	23

90º ENTRY ROTATABLE COUPLING 2M440ML135

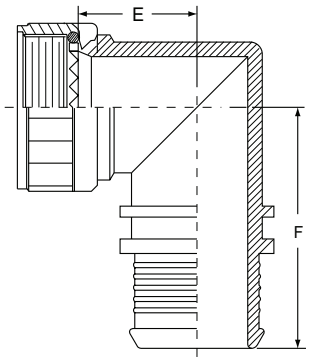

2M Low-Profile Micro Band Adapter Order Info

2M440MS134

Micro38999

1. PART NUMBER	2. SERVICE CLASS	3. SIZE CODE	4. CABLE ENTRY SIZE	5. LENGTH	6. BAND OPTIONS
2M440MS134	-M	07	05	-6	K

Omit for no band supplied
K adapter is supplied with **Micro Band** shield termination band, pre-coiled

1. PART NUMBER

Part #	Description
2M440MS134	Straight Entry

2. SERVICE CLASS

Material	Part #	Description	RoHS
ALUMINUM	-C	Black Anodized (Non-conductive)	✓
	-M	Electroless Nickel	✓
	-NF	Olive Drab Cadmium	
	-MT	Durmalon (Ni PTFE)	✓
	-ZN	Olive Drab Zinc Nickel	✓
	-ZNU	Black Zinc Nickel	✓
STAINLESS STEEL	-Z1	Passivated	✓
	-ZL	Electrolytic Nickel	✓

3. SIZE CODE

05	.2500-32
06	.3125-32
11	.3750-32
07	.4375-28
08	.5000-28
09	.5625-24
10	.6250-24
12	.6875-24
13	.7500-20
14	.9375-20
17	1.1875-18

4. CABLE ENTRY SIZE

01	.094	05-06, 11
02	.125	05-07, 11
03	.175	05-08, 11
04	.234	06-08
05	.272	07-09
06	.312	07-10
07	.375	08-13
08	.438	09-13
09	.500	10-13
10	.562	12-14, 17
11	.625	14, 17
12	.688	14, 17
13	.750	14, 17
14	.812	14, 17

5. LENGTH

Straight Entry
2M440MS135 Only

Length Code	Length (inches)
-6	.750
-7	.875
-8	1.000
-9	1.125
-10	1.250
-11	1.375
-12	1.500
-13	1.625
-14	1.750
-15	1.875
-16	2.000
-17	2.125
-18	2.250
-19	2.375
-20	2.500

Specify Length in increments of .125 inches (3.18 mm.)

SHELL SIZE

Accessory Thread	Size Code	Series 2M801	Series 2M803	Series 2M804	Series 2M805
.2500-32 UNEF-2B	**05**	5	5	5	
.3125-32 UNEF-2B	**06**	6	6	6	
.3750-32 UNEF-2B	**11**				8
.4375-28 UNEF-2B	**07**	7	7	7	9
.5000-28 UNEF-2B	**08**	8	8	8	10
.5625-24 UNEF-2B	**09**	9	9	9	11
.6250-24 UNEF-2B	**10**	10	10	10	12
.6875-24 UNEF-2B	**12**	13	12	12	
.7500-20 UNEF-2B	**13**				15
.9375-20 UNEF-2B	**14**	16,17	14, 15	14, 15	18, 19
1.1875-18 UNEF-2B	**17**	21			23

MATERIALS

Nut, Adapter	Aluminum Alloy or 300 Series SST
Band	300 Series SST
O-Ring	Silicone Elastomer

2M Low-Profile Micro-Band Adapter Dimensions

2M440MS134

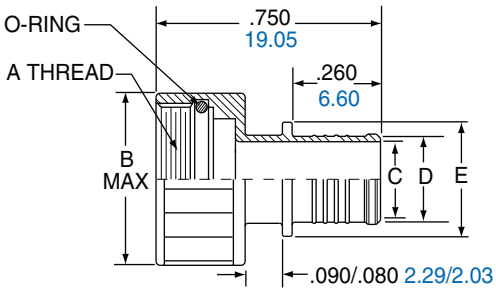

CONNECTOR SHELL SIZE			
Size Code	A Threads	B Max. in.	B Max. mm.
05	.2500-32 UNEF-2B	.350	8.89
06	.3125-32 UNEF-2B	.415	10.54
11	.3750-32 UNEF-2B	.465	11.81
07	.4375-28 UNEF-2B	.530	13.46
08	.5000-28 UNEF-2B	.595	15.11
09	.5625-24 UNEF-2B	.650	16.51
10	.6250-24 UNEF-2B	.715	18.16
12	.6875-24 UNEF-2B	.785	19.94
13	.7500-20 UNEF-2B	.830	21.08
14	.9375-20 UNEF-2B	1.020	25.91
17	1.1875-18 UNEF-2B	1.280	32.51

CABLE ENTRY							
Cable Entry Code	C Dia. in. ± .015	C Dia. mm. ± 0.38	D Dia. in. ± .015	D Dia. mm. ± 0.38	E Dia. in. ± .015	E Dia. mm. ± 0.38	Use With Size Codes
01	.094	2.39	.133	3.38	.235	5.97	05-06
02	.125	3.18	.164	4.17	.266	6.76	05-07
03	.172	4.37	.211	5.36	.313	7.95	05-08
04	.234	5.94	.273	6.93	.375	9.53	06-08
05	.272	6.91	.311	7.90	.413	10.49	07-09
06	.312	7.92	.351	8.92	.453	11.51	07-10
07	.375	9.53	.414	10.52	.516	13.11	08-12
08	.438	11.13	.477	12.12	.579	14.71	09-12
09	.500	12.70	.539	13.69	.641	16.28	10-12
10	.562	14.27	.601	15.27	.703	17.88	12-14
11	.625	15.88	.664	16.87	.766	19.46	14
12	.688	17.48	.727	18.47	.829	21.06	14
13	.750	19.05	.789	20.04	.891	22.63	14
14	.812	20.62	.851	21.62	.953	24.21	14

CONNECTOR SHELL SIZE			
Size Code	A Threads	Shell Size: Series 2M801, 2M803, 2M804	Shell Size: Series 2M805
05	.2500-32 UNEF-2B	5	
06	.3125-32 UNEF-2B	6	
11	.3750-32 UNEF-2B		8
07	.4375-28 UNEF-2B	7	9
08	.5000-28 UNEF-2B	8	10
09	.5625-24 UNEF-2B	9	11
10	.6250-24 UNEF-2B	10	12
12	.6875-24 UNEF-2B	12, 13	
13	.7500-20 UNEF-2B		15
14	.9375-20 UNEF-2B	14, 15, 16, 17	18, 19
17	1.1875-18 UNEF-2B	21	23

2M Environmental Backshell Ordering Info

2M370MS37, MS038, MB038 and MA038

Micro38999

1. PART NUMBER	2. SERVICE CLASS	3. SIZE CODE	4. CABLE ENTRY SIZE	5. LENGTH	6. OPTIONS
2M370MS038	-M	07	05	-6	N

Omit for screw clamp with saddle bars
N Optional Compression Nut, Low Profile

1. PART NUMBER

Part #	Description
2M370MS038	Straight Entry Rotatable Coupling
2M370MS037	Straight Entry, Direct Coupling
2M370MB038	45° Entry
2M370MA038	90° Entry

2. SERVICE CLASS

Material	Part #	Description	RoHS
ALUMINUM	-C	Black Anodized (Non-conductive)	✓
	-M	Electroless Nickel	✓
	-NF	Olive Drab Cadmium	
	-MT	Durmalon (Ni PTFE)	✓
	-ZN	Olive Drab Zinc Nickel	✓
	-ZNU	Black Zinc Nickel	✓
STAINLESS STEEL	-Z1	Passivated	✓
	-ZL	Electrolytic Nickel	✓

3. SIZE CODE

05	.2500-32
06	.3125-32
11	.3750-32
07	.4375-28
08	.5000-28
09	.5625-24
10	.6250-24
12	.6875-24
13	.7500-20
14	.9375-20
17	1.1875-18

4. CABLE ENTRY SIZE

Code	Max.	Min.
01	.109	.031
02	.172	.078
03	.234	.140
04	.297	.203
05	.359	.265
06	.422	.328
07	.484	.390
08	.547	.463
09	.609	.515

5. LENGTH

Straight Entry 2M440MS. Only

Length Code	Length (inches)
-5	.625
-6	.750
-7	.875
-8	1.000
-9	1.125
-10	1.250
-11	1.375
-12	1.500
-13	1.625
-14	1.750
-15	1.875
-16	2.000
-17	2.125
-18	2.250
-19	2.375
-20	2.500

Specify Length in increments of .125 inches (3.18 mm.)

SHELL SIZE

Accessory Thread	Size Code	Series 2M801	Series 2M803	Series 2M804	Series 2M805
.2500-32 UNEF-2B	05	5	5	5	
.3125-32 UNEF-2B	06	6	6	6	
.3750-32 UNEF-2B	11				8
.4375-28 UNEF-2B	07	7	7	7	9
.5000-28 UNEF-2B	08	8	8	8	10
.5625-24 UNEF-2B	09	9	9	9	11
.6250-24 UNEF-2B	10	10	10	10	12
.6875-24 UNEF-2B	12	13	12	12	
.7500-20 UNEF-2B	13				15
.9375-20 UNEF-2B	14	16,17	14, 15	14, 15	18, 19
1.1875-18 UNEF-2B	17	21			23

MATERIALS

Adapter, Clamp, Nut and Saddles	Aluminum Alloy 6061-T6 or 300 Series Stainless Steel
O-Rings	Silicone Rubber
Hardware	300 Series Stainless Steel

2M Environmental Backshell

2M370MS037, MS038, MB038 and MA038

STRAIGHT ENTRY
ROTATABLE COUPLING
2M370MS038

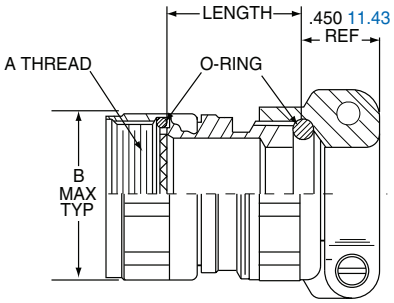

STRAIGHT ENTRY
DIRECT COUPLING
2M370MS037

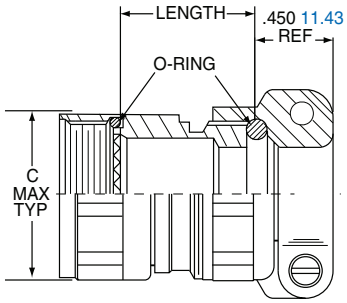

CLAMP STYLE N
COMPRESSION NUT

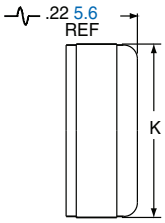

SADDLE CLAMP

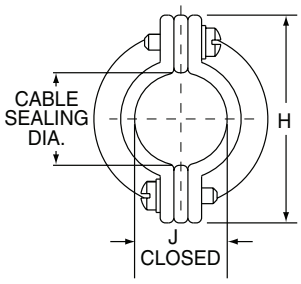

45º ENTRY
ROTATABLE COUPLING
2M370MB038

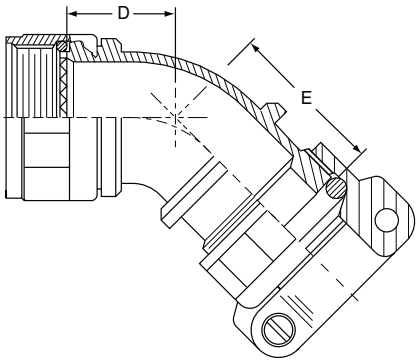

90º ENTRY
ROTATABLE COUPLING
2M370MA038

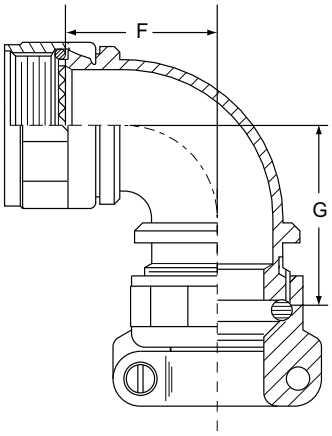

Size Code	A Threads UNEF-2B	B Max.		C Max.	
		in.	mm.	in.	mm.
05	.2500-32	.470	11.94	.350	8.89
06	.3125-32	.530	13.46	.415	10.54
11	.3750-32	.570	14.48	.465	11.68
07	.4375-28	.637	16.18	.530	13.46
08	.5000-28	.700	17.78	.595	15.11
09	.5625-24	.758	19.25	.650	16.51
10	.6250-24	.819	20.80	.715	18.16
12	.6875-24	.896	22.76	.785	19.94
13	.7500-20	.930	23.62	.830	21.08
14	.9375-20	1.137	28.88	1.020	25.91
17	1.1875-18	1.280	32.51	1.280	32.51

CABLE ENTRY																
Cable Entry Code	Cable Sealing Dia.		D Max.		E Max.		F Max.		G Max.		H Dia.		J Dia.		K Dia.	
	Max.	Min.	In.	mm.	in.	mm.	in.	mm.	in.	mm.	in. ± .015	mm. ± 0.38	in. ± .030	mm. ± 0.76	in. ± .015	mm. ± 0.38
01	.109	.031	.603	15.32	.581	14.67	.724	18.39	.702	17.83	.496	12.60	.110	2.79	.398	10.11
02	.172	.078	.603	15.32	.581	14.67	.724	18.39	.702	17.83	.582	14.78	.170	4.32	.460	11.68
03	.234	.140	.603	15.32	.581	14.67	.724	18.39	.702	17.83	.656	16.66	.230	5.84	.523	13.28
04	.297	.203	.629	15.98	.607	15.42	.786	19.96	.764	19.41	.726	18.44	.300	7.62	.585	14.86
05	.359	.265	.629	15.98	.607	15.42	.786	19.96	.764	19.41	.885	22.48	.360	9.14	.647	16.43
06	.422	.328	.655	16.64	.633	16.00	.848	21.54	.826	20.98	.952	24.18	.420	10.67	.710	18.03
07	.484	.390	.655	16.64	.633	16.00	.848	21.54	.826	20.98	1.018	25.86	.480	12.19	.773	19.63
08	.547	.453	.707	17.96	.685	17.40	.911	23.14	.889	22.68	1.084	27.53	.550	13.97	.835	21.21
09	.609	.515	.707	17.96	.685	17.40	.911	23.14	.889	22.58	1.148	29.16	.610	15.49	.897	22.76

2M EMI Backshell Ordering Information

2M380MS137, MS135, MB137 and MA137

Micro38999

1.	2.	3.	4.	5.	6.
PART NUMBER	SERVICE CLASS	SIZE CODE	CABLE ENTRY SIZE	LENGTH	OPTIONS
2M380MS135	-M	07	05	-6	N

Omit for screw clamp with saddle bars
N Optional Compression Nut, Low Profile

1. PART NUMBER

Part #	Description
2M380MS137	Straight Entry Rotatable Coupling
2M380MS135	Straight Entry, Direct Coupling
2M380MB137	45° Entry
2M380MA137	90° Entry

2. SERVICE CLASS

Material	Part #	Description	RoHS
ALUMINUM	-C	Black Anodized (Non-conductive)	✓
	-M	Electroless Nickel	✓
	-NF	Olive Drab Cadmium	
	-MT	Durmalon (Ni PTFE)	✓
	-ZN	Olive Drab Zinc Nickel	✓
	-ZNU	Black Zinc Nickel	✓
STAINLESS STEEL	-Z1	Passivated	✓
	-ZL	Electrolytic Nickel	✓

3. SIZE CODE

05	.2500-32
06	.3125-32
11	.3750-32
07	.4375-28
08	.5000-28
09	.5625-24
10	.6250-24
12	.6875-24
13	.7500-20
14	.9375-20
17	1.1875-18

4. CABLE ENTRY SIZE

Code	Saddle Clamp Dia. Fully Closed
01	.109
02	.172
03	.234
04	.297
05	.359
06	.422
07	.484
08	.547
09	.609

5. LENGTH

Straight Entry 2M380MS Only

Length Code	Length (inches)
-5	.625
-6	.750
-7	.875
-8	1.000
-9	1.125
-10	1.250
-11	1.375
-12	1.500
-13	1.625
-14	1.750
-15	1.875
-16	2.000
-17	2.125
-18	2.250
-19	2.375
-20	2.500

Specify Length in increments of .125 inches (3.18 mm.)

SHELL SIZE

Accessory Thread	Size Code	Series 2M801	Series 2M803	Series 2M804	Series 2M805
.2500-32 UNEF-2B	05	5	5	5	
.3125-32 UNEF-2B	06	6	6	6	
.3750-32 UNEF-2B	11				8
.4375-28 UNEF-2B	07	7	7	7	9
.5000-28 UNEF-2B	08	8	8	8	10
.5625-24 UNEF-2B	09	9	9	9	11
.6250-24 UNEF-2B	10	10	10	10	12
.6875-24 UNEF-2B	12	13	12	12	
.7500-20 UNEF-2B	13				15
.9375-20 UNEF-2B	14	16,17	14, 15	14, 15	18, 19
1.1875-18 UNEF-2B	17	21			23

MATERIALS

Adapter, Clamp, Nut and Saddles	Aluminum Alloy 6061-T6 or 300 Series Stainless Steel
O-Rings	Silicone Rubber
Hardware	300 Series Stainless Steel

2M EMI Backshell

2M380MS137, MS135, MB138 and MA138

STRAIGHT ENTRY
ROTATABLE COUPLING
2M380MS137

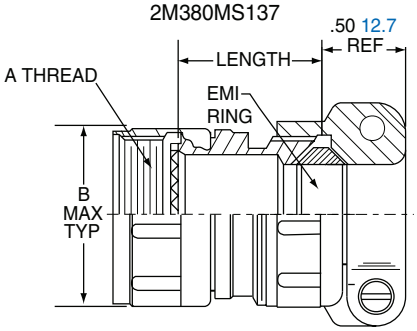

STRAIGHT ENTRY
DIRECT COUPLING
2M380MS135

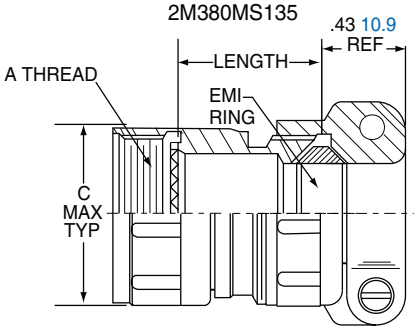

CLAMP STYLE N
COMPRESSION NUT

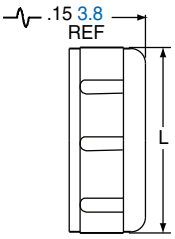

SADDLE CLAMP

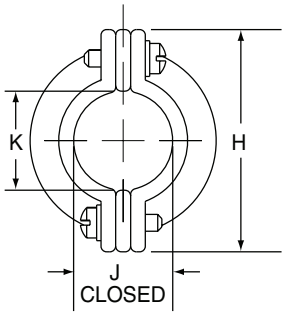

45º ENTRY
ROTATABLE COUPLING
2M380MB137

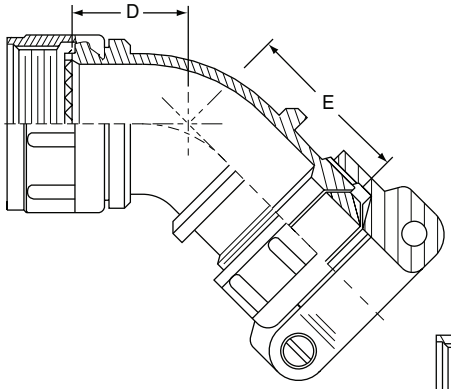

90º ENTRY
ROTATABLE COUPLING
2M380MA137

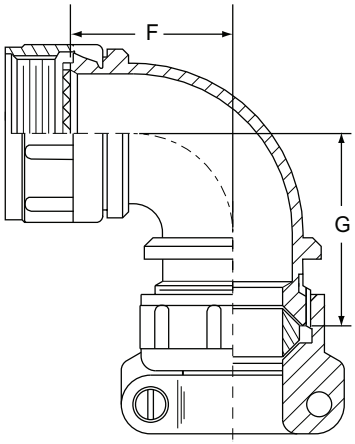

Size Code	A Threads	B Max.		C Max.	
		in.	mm.	in.	mm.
05	.2500-32 UNEF-2B	.470	11.94	.350	8.89
06	.3125-32 UNEF-2B	.530	13.46	.415	10.54
11	.3750-32 UNEF-2B	.570	14.48	.465	11.68
07	.4375-28 UNEF-2B	.637	16.18	.530	13.46
08	.5000-28 UNEF-2B	.700	17.78	.595	15.11
09	.5625-24 UNEF-2B	.758	19.25	.650	16.51
10	.6250-24 UNEF-2B	.819	20.80	.715	18.16
12	.6875-24 UNEF-2B	.896	22.76	.785	19.94
13	.7500-20 UNEF-2B	.930	23.62	.830	21.08
14	.9375-20 UNEF-2B	1.137	28.88	1.020	25.91
17	1.1875-18 UNEF-2B	1.387	35.23	1.280	32.51

CABLE ENTRY																
Cable Entry Code	D Max.		E Max.		F Max.		G Max.		H		J Dia. Closed		K Dia.		L Dia.	
	In.	mm.	in.	mm.	in.	mm.	in.	mm.	in. ± .015	mm. ± 0.38	in. ± .030	mm. ± 0.76	in. ± .015	mm. ± 0.38	in. ± .015	mm. ± 0.38
01	.603	15.32	.581	14.67	.724	18.39	.702	17.83	.496	12.60	.110	2.79	.119	3.02	.398	10.11
02	.603	15.32	.581	14.67	.724	18.39	.702	17.83	.582	14.78	.170	4.32	.182	4.62	.460	11.68
03	.603	15.32	.581	14.67	.724	18.39	.702	17.83	.656	16.66	.230	5.84	.244	6.20	.523	13.28
04	.629	15.98	.607	15.42	.786	19.96	.764	19.41	.726	18.44	.300	7.62	.307	7.80	.585	14.86
05	.629	15.98	.607	15.42	.786	19.96	.764	19.41	.885	22.48	.360	9.14	.369	9.37	.647	16.43
06	.655	16.64	.633	16.00	.848	21.54	.826	20.98	.952	24.18	.420	10.67	.432	10.97	.710	18.03
07	.655	16.64	.633	16.00	.848	21.54	.826	20.98	1.018	25.86	.480	12.19	.494	12.55	.773	19.63
08	.707	17.96	.685	17.40	.911	23.14	.889	22.68	1.084	27.53	.550	13.97	.557	14.15	.835	21.21
09	.707	17.96	.685	17.40	.911	23.14	.889	22.58	1.148	29.16	.610	15.49	.619	15.72	.897	22.76

2M Environmental EMI Backshell Ordering Info

2M390MS077, MS076, 2M390MB077 and 2M390MA077

Micro38999

1.	2.	3.	4.	5.	6.
PART NUMBER	SERVICE CLASS	SIZE CODE	CABLE ENTRY SIZE	LENGTH	OPTIONS
2M390MS076	-M	07	05	-6	N

Omit for screw clamp
with saddle bars
N Optional Compression Nut,
Low Profile

1. PART NUMBER

Part #	Description
2M390MS077	Straight Entry Rotatable Coupling
2M390MS076	Straight Entry, Direct Coupling
2M390MB077	45° Entry Rotatable Coupling
2M390MA077	90° Entry Rotatable Coupling

2. SERVICE CLASS

Material	Part #	Description	RoHS
ALUMINUM	-C	Black Anodized (Non-conductive)	✓
	-M	Electroless Nickel	✓
	-NF	Olive Drab Cadmium	
	-MT	Durmalon (Ni PTFE)	✓
	-ZN	Olive Drab Zinc Nickel	✓
	-ZNU	Black Zinc Nickel	✓
STAINLESS STEEL	-Z1	Passivated	✓
	-ZL	Electrolytic Nickel	✓

3. SIZE CODE

05	.2500-32
06	.3125-32
11	.3750-32
07	.4375-28
08	.5000-28
09	.5625-24
10	.6250-24
12	.6875-24
13	.7500-20
14	.9375-20
17	1.1875-18

4. CABLE ENTRY SIZE

Code	Max.	Min.
01	.109	.031
02	.172	.078
03	.234	.140
04	.297	.203
05	.359	.265
06	.422	.328
07	.484	.390
08	.547	.463
09	.609	.515
10	.672	.578
11	.734	.640

5. LENGTH

Straight Entry 2M380MS Only

Length Code	Length (inches)
-5	.625
-6	.750
-7	.875
-8	1.000
-9	1.125
-10	1.250
-11	1.375
-12	1.500
-13	1.625
-14	1.750
-15	1.875
-16	2.000
-17	2.125
-18	2.250
-19	2.375
-20	2.500

Specify Length in increments of .125 inches (3.18 mm.)

SHELL SIZE

Accessory Thread	Size Code	Series 2M801	Series 2M803	Series 2M804	Series 2M805
.2500-32 UNEF-2B	05	5	5	5	
.3125-32 UNEF-2B	06	6	6	6	
.3750-32 UNEF-2B	11				8
.4375-28 UNEF-2B	07	7	7	7	9
.5000-28 UNEF-2B	08	8	8	8	10
.5625-24 UNEF-2B	09	9	9	9	11
.6250-24 UNEF-2B	10	10	10	10	12
.6875-24 UNEF-2B	12	13	12	12	
.7500-20 UNEF-2B	13				15
.9375-20 UNEF-2B	14	16,17	14, 15	14, 15	18, 19
1.1875-18 UNEF-2B	17	21			23

MATERIALS

Adapter, Clamp, Nut and Saddles	Aluminum Alloy 6061-T6 or 300 Series Stainless Steel
O-Rings	Silicone Rubber
Hardware	300 Series Stainless Steel

2M Environmental EMI Backshell

2M390MS077, MS076, MB077 and MA077

STRAIGHT ENTRY
ROTATABLE COUPLING
2M390MS077

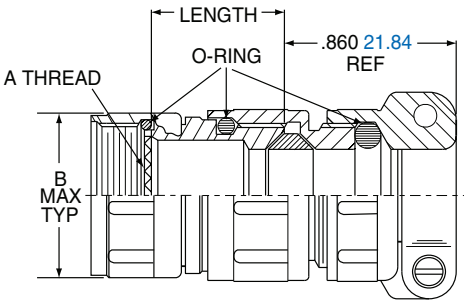

STRAIGHT ENTRY
DIRECT COUPLING
2M390MS076

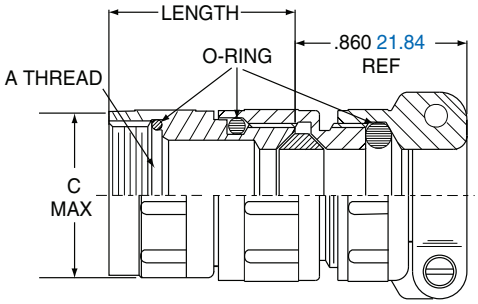

CLAMP STYLE N
COMPRESSION NUT

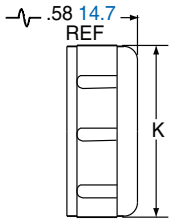

45º ENTRY
ROTATABLE COUPLING
2M390MB077

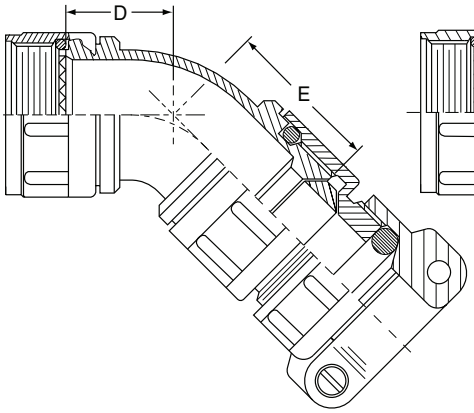

90º ENTRY
ROTATABLE COUPLING
2M390MA077

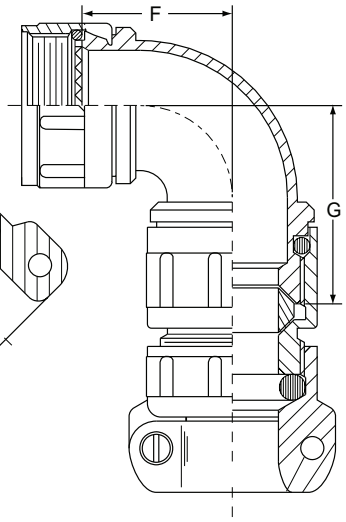

SADDLE CLAMP

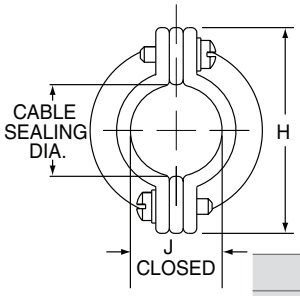

Size Code	A Threads UNEF-2B	B Max.		C Max.	
		in.	mm.	in.	mm.
05	.2500-32	.470	11.94	.350	8.89
06	.3125-32	.530	13.46	.415	10.54
11	.3750-32	.570	14.48	.570	14.48
07	.4375-28	.637	16.18	.530	13.46
08	.5000-28	.700	17.78	.595	15.11
09	.5625-24	.758	19.25	.650	16.51
10	.6250-24	.819	20.80	.715	18.16
12	.6875-24	.896	22.76	.785	19.94
13	.7500-20	.930	23.62	.830	21.08
14	.9375-20	1.137	28.88	1.020	25.91
17	1.1875-18	1.387	35.23	1.280	32.51

CABLE ENTRY

Cable Entry Code	Cable Sealing Dia.		D Max.		E Max.		F Max.		G Max.		H		J Dia. Closed		K Dia.	
	Max.	Min.	In.	mm.	in.	mm.	in.	mm.	in.	mm.	in. ± .010	mm. ± 0.25	in. ± .030	mm. ± 0.76	in. ± .010	mm. ± 0.25
01	.109	.031	.603	15.32	681	14.67	.724	18.39	.802	20.37	.496	12.60	.110	2.79	.398	10.11
02	.172	.078	.603	15.32	.681	14.67	.724	18.39	.802	20.37	.582	14.78	.170	4.32	.460	11.68
03	.234	.140	.603	15.32	.681	14.67	.724	18.39	.802	20.37	.656	16.66	.230	5.84	.523	13.28
04	.297	.203	.629	15.98	.707	15.42	.786	19.96	.864	21.95	.726	18.44	.300	7.62	.585	14.86
05	.359	.265	.629	15.98	.707	15.42	.786	19.96	.864	21.95	.885	22.48	.360	9.14	.647	16.43
06	.422	.328	.655	16.64	.733	16.00	.848	21.54	.926	23.52	.952	24.18	.420	10.67	.710	18.03
07	.484	.390	.655	16.64	.733	16.00	.848	21.54	.926	23.52	1.018	25.86	.480	12.19	.773	19.63
08	.547	.453	.707	17.96	.785	17.40	.911	23.14	.989	25.12	1.084	27.53	.550	13.97	.835	21.21
09	.609	.515	.707	17.96	.785	17.40	.911	23.14	.989	25.12	1.148	29.16	.610	15.49	.897	22.78

2M Shorting Cap Backshell Ordering Info

2M340MS026

Micro38999

1.	2.	3.	4.	5.	6.	5.
PART NUMBER	SERVICE CLASS	ATTACHMENT TYPE	SIZE CODE	LENGTH	ATTACHMENT CODE	LENGTH
2M340MS026	-M	-G	07	-4	02	-5

Omit for attachment Type N (No Attachment) Ex. "-5" equals five inch length

1. PART NUMBER

Part #	Description
2M340MS026	Shorting Cap Backshell

2. SERVICE CLASS

Material	Part #	Description	RoHS
ALUMINUM	-C	Black Anodized (Non-conductive)	✓
	-M	Electroless Nickel	✓
	-NF	Olive Drab Cadmium	
	-MT	Durmalon (Ni PTFE)	✓
	-ZN	Olive Drab Zinc Nickel	✓
	-ZNU	Black Zinc Nickel	✓
STAINLESS STEEL	-Z1	Passivated	✓
	-ZL	Electrolytic Nickel	✓

3. ATTACHMENT TYPE

-G	Nylon Rope
-H	Stainless Steel Wire Rope, Teflon® Jacket
-N	No Attachment
-S	Stainless Steel Sash Chain
-SK	Nylon Rope With Slip Knot
-U	Stainless Steel Wire Rope, Polyurethane Jacket

4. SIZE CODE

05	.2500-32
06	.3125-32
11	.3750-32
07	.4375-28
08	.5000-28
09	.5625-24
10	.6250-24
12	.6875-24
13	.7500-20
14	.9375-20
17	1.1875-18

5. LENGTH

Overall Length in Inches

Length Code	Length (inches)
-4	.50
-5	.75
-6	1.00
-7	1.25
-8	1.50
-9	1.75
-10	2.00
-11	2.25
-12	2.50
-13	2.75
-14	3.00

6. ATTACHMENT CODE

Omit for attachment Types N (No Attachment) and SK (Slip Knot)

	SMALL RING	**01** –.126 (3.20) I.D. **02** –.145 (3.68) I.D. **04** –.188 (4.78) I.D. **06** –.197 (5.00) I.D.
	LARGE RING	**14** –.385 (9.78) I.D. **15** –.445 (11.30) I.D. **16** –.570 (14.48) I.D. **17** –.635 (16.13) I.D. **18** –.695 (17.65) I.D. **19** –.885 (22.48) I.D. **20** –1.070 (27.17) I.D.
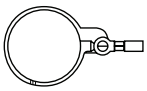	SPLIT RING	**50** –.420 (10.67) I.D. **52** –.480 (12.19) I.D. **54** –.635 (16.13) I.D. **56** –.745 (18.92) I.D. **58** –.885 (22.48) I.D. **60** –1.010 (25.65) I.D. **64** –1.125 (28.58) I.D. **68** –1.345 (34.16) I.D.

Assembly Instructions for Protection Cap, see page 100.

MATERIALS

Adapter, Clamp, Nut and Saddles	Aluminum Alloy 6061-T6 or 300 Series Stainless Steel
Hardware	300 Series SST
O-Ring	Silicone Elastomer

2M Shorting Cap Backshell Dimensions

2M340MS026

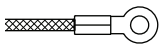

Small Ring for Attaching to a Panel with a Screw

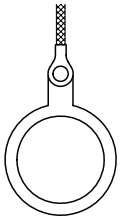

Large Solid Ring for Attaching to a Jam Nut Receptacle

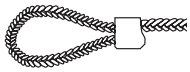

Nylon Rope Slip Knot (SK) for attaching Covers to Cables

ATTACHMENT OPTIONS

Dia. Code	Ring I.D. in. ± .005	Ring I.D. mm. ± .13	Ring O. D. in. Max	Ring O. D. mm. Max
01	.126	8.89	.31	7.9
02	.145	10.54	.31	7.9
04	.188	11.81	.31	7.9
06	.197	13.46	.31	7.9
Dia. Code	**Ring I.D. in. ± .010**	**Ring I.D. mm. ± .25**	**Ring O. D. in. ± .015**	**Ring O. D. mm. ± .38**
14	.385	9.78	.510	12.95
15	.445	11.30	.565	14.35
16	.570	14.48	.685	17.40
17	.635	16.13	.760	19.30
18	.695	17.65	.820	20.82
19	.885	22.48	1.010	25.65
20	1.070	27.17	1.195	30.35
21	1.135	28.83	1.250	31.75
22	1.210	30.73	1.312	33.32

55° to +100°C., black, flexible, good abrasion resistance, good resistance to fuels, .120" 3mm diameter. Length includes .5" 13mm diameter loop.

DIMENSIONS

Size Code	A Max Dia. in.	A Max Dia. mm.	B Threads
05	.350	8.89	.2500-32 UNEF-2B
06	.415	10.54	.3125-32 UNEF-2B
11	.465	11.81	.3750-32 UNEF-2B
07	.530	13.46	.4375-28 UNEF-2B
08	.595	14.35	.5000-28 UNEF-2B
09	.650	16.51	.5625-24 UNEF-2B
10	.715	18.16	.6250-24 UNEF-2B
12	.785	19.94	.6875-24 UNEF-2B
13	.830	21.08	.7500-20 UNEF-2B
14	1.020	25.91	.9375-20 UNEF-2B
17	1.270	32.26	1.1875-18 UNEF-2B

LANYARD OPTIONS

Nylon Rope 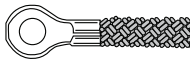	-55° to +100°C., black, very flexible, good abrasion resistance, good resistance to fuels, .120" 3mm diameter
Polyurethane Coated Wire Rope 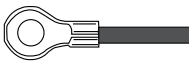	Black polyurethane over stainless steel rope, very flexible, excellent abrasion resistance, excellent resistance to fuels, .080" 2mm diameter
Teflon® Jacketed Wire Rope	Translucent FEP jacket over stainless steel, -55° to +200°C., fair flexibility, good abrasion resistance, .100" diameter
Sash Chain	Stainless steel, #8 chain, .240'' 6mm diameter

2M Series Backshells and Accessories

2M809S060, 2M809A060 Shrink Boots

Micro38999

The 2M Series of Shrink Boots is intended for use with the 2M series of connectors supplied with Banding Platforms. All shrink boots are supplied pre-coated with Hi-Temperature, Hot-Melt adhesive that will seal the boot to both the cable and connector. The boots also contains a lip that will lock on to a groove on the connector for improved strain relief.

High Performance Elastomer - Lipped Shrink Boot

- Pre-coated with Adhesive
- Operating Temperature: -70°C to +150°C
- Rated for 3000 hrs. continuous operation at +150°C
- Excellent resistance to fuels, oils, and solvents

Material	Spec
Fluid Resistant Polymer	VG 95343 Part 6

Boot Size	Shell Size		Straight Shrink Boots Part Number	Right Angle Boots Part Number
	Series 2M801, 2M803, 2M804	Series 2M805	Pre-Coated with Hi-Temp Hot-Melt Adhesive	Pre-Coated with Hi-Temp Hot-Melt Adhesive
1	5	N/A	**2M809S060-1G**	**2M809A060-1G**
2	6, 7	8,9	**2M809S060-2G**	**2M809A060-2G**
3	8, 9	10,11	**2M809S060-3G**	**2M809A060-3G**
4	10, 12, 13	12, 15	**2M809S060-4G**	**2M809A060-4G**
5	14, 15, 16, 17	18, 19	**2M809S060-5G**	**2M809A060-5G**
6	21	23	**2M809S060-6G**	**2M809A060-6G**

Zero Halogen - Lipped Shrink Boots

- Low Smoke, Zero Halogen
- Toxicity Requirements: Meets U.S. and EU standards
- Pre-coated with Adhesive
- Operating Temperature: -30°C to +125°C
- Good resistance to fuels, oils, and solvents

Material	Spec
Low Smoke Halogen Free	NAVSEA 5617649

Boot Size	Shell Size		Straight Shrink Boot Part Number	Right Angle Shrink Boots Part Number
	Series 2M801, 2M803, 2M804	Series 2M805	Pre-Coated with Hi-Temp Hot-Melt Adhesive	Pre-Coated with Hi-Temp Hot-Melt Adhesive
1	5	N/A	**2M809S060-1H**	**2M809A060-1H**
2	6, 7	8,9	**2M809S060-2H**	**2M809A060-2H**
3	8, 9	10,11	**2M809S060-3H**	**2M809A060-3H**
4	10, 12, 13	12, 15	**2M809S060-4H**	**2M809A060-4H**
5	14, 15, 16, 17	18, 19	**2M809S060-5H**	**2M809A060-5H**
6	21	23	**2M809S060-6H**	**2M809A060-6H**

Size 1 right angle supplied less lip see page 108

Series 2M Torque Values

Series 2M801, 2M803, 2M804, 2M805 Recommended Torque Values					
Shell Size Series 2M801, 2M803, 2M804	Shell Size Series 2M805	Backshell Tightening			
		In-LBs.		N-m	
		Min.	Max.	Min.	Max.
5	-	12	16	1.36	1.81
6	8	14	18	1.58	2.03
7	9	16	20	1.81	2.26
8	10	18	22	2.03	2.49
9	11	20	24	2.26	2.71
10	12	22	26	2.49	2.94
12, 13	15	28	32	3.16	3.62
14, 16	18	28	32	3.16	3.62
15, 17	19	28	32	3.16	3.62
21	23	28	32	3.16	3.62

2M Backshells and Accessories

2M809S060, 2M809A060 Shrink Boots

Lipped Straight Shrink Boots

STANDARD LENGTH AFTER SHRINKING

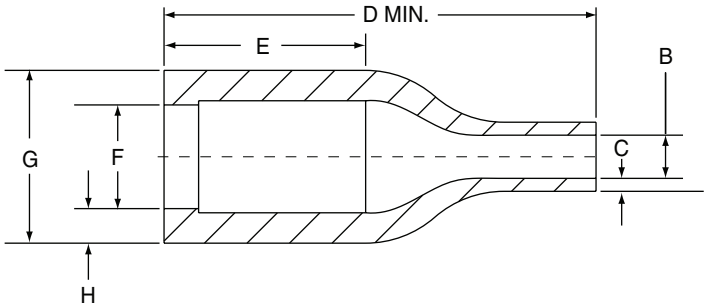

AS SUPPLIED (EXPANDED)

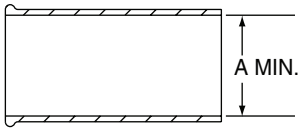

Boot Size	A Min.		B Max.		C±20%		D±10%		E Ref.		F Max.		G Ref.		H±30%	
	in.	mm.	in.	mm.	in.	mm.	in.	mm.	in.	mm.	in.	mm.	in.	mm.	in.	mm.
1	.350	9.0	.075	1.91	.023	.584	.750	19.0	.350	9.0	.182	4.62	.300	7.6	.060	1.52
2	.650	16.5	.150	3.8	.050	1.27	1.000	25.4	.560	14.2	.238	6.05	.410	10.5	.090	2.29
3	.920	23.4	.220	5.6	.060	1.52	1.500	38.1	0.830	21.1	.338	8.59	.530	13.46	.100	2.54
4	1.120	28.4	.260	6.6	.070	1.78	2.160	54.9	1.090	27.7	.488	12.40	.700	17.8	.110	2.79
5	1.220	31.0	.280	7.1	.080	2.03	2.640	67.0	1.380	35.0	.628	15.95	.860	21.8	.120	3.05
6	1.680	42.7	.390	9.9	.080	2.03	4.080	103.6	2.220	56.4	.984	25.00	1.270	32.2	.143	3.63

Lipped Right Angle Shrink Boots

AS SUPPLIED (EXPANDED)

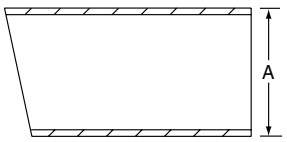

AFTER SHRINKING

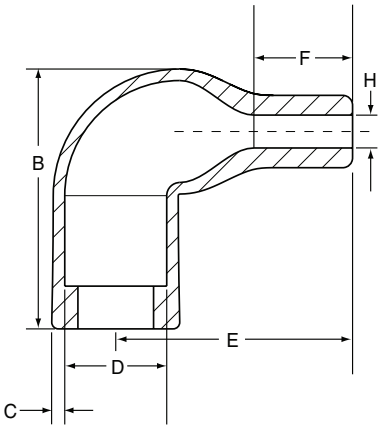

AFTER SHRINKING SIZE 1

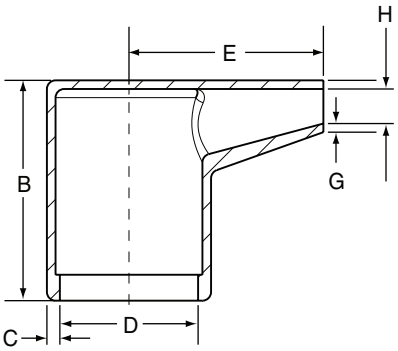

Boot Size	A Min.		B Ref.		C±30%		D Max.		E±20%		F Ref.		G±20%		H Max	
	in.	mm.	in.	mm.	in.	mm.	in.	mm.	in.	mm.	in.	mm.	in.	mm.	in.	mm.
1	.240	6.0	.510	13.0	.040	1.0	.322	8.18	.410	10.5	N/A	N/A	.020	0.5	.080	2.0
2	.650	16.5	.790	20.1	.040	1.0	.310	7.9	.720	18.3	.300	7.62	.060	1.6	.100	2.5
3	.920	23.3	.900	22.9	.050	1.3	.410	10.4	.800	20.3	.230	5.8	.050	1.3	.220	5.6
4	1.120	28.5	1.120	28.5	.060	1.5	.560	14.2	1.170	29.8	.280	7.1	.060	1.5	.250	6.3
5	1.220	30.9	1.200	30.5	.070	1.8	.700	17.8	1.400	35.6	.340	8.6	.070	1.8	.280	7.1
6	1.680	42.6	1.700	43.2	.080	2.0	1.100	27.9	2.100	53.3	.620	15.7	.080	2.0	.380	9.7

2M Backshells and Accessories

Hex Jam Nuts for 2M Receptacles- 2M809-035

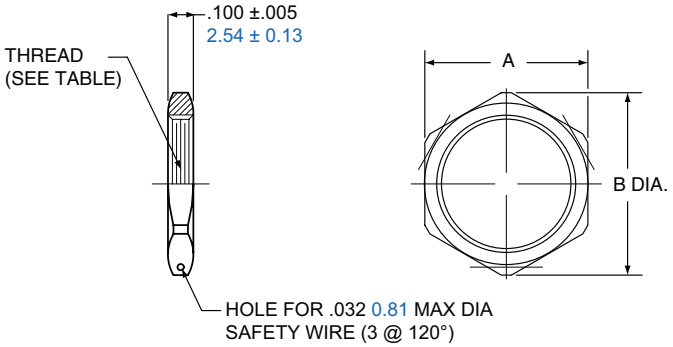

Thread Size Class 2B	Part Number						Dimensions			
	Aluminum				Stainless Steel		A Hex.		B Dia.	
	Electroless Nickel	Olive Drab Cadmium	Black Zinc Nickel	Nickel-PTFE	Passivated	Black Zinc-Cobalt	In.	mm.	In.	mm.
.2500-32 UNEF	2M809-035M01W	2M809-035NF01W	2M809-035ZNU01W	2M809-035MT01W	2M809-035Z101W	2M809-035ZC01W	.375	9.53	.403	10.24
.3125-28 UN	2M809-035M02W	2M809-035NF02W	2M809-035ZNU02W	2M809-035MT02W	2M809-035Z102W	2M809-035ZC02W	.4375	11.11	.475	12.07
.3125-32 UNEF	2M809-035M03W	2M809-035NF03W	2M809-035ZNU03W	2M809-035MT03W	2M809-035Z103W	2M809-035ZC03W	.4375	11.11	.475	12.07
.3750-28 UN	2M809-035M04W	2M809-035NF04W	2M809-035ZNU04W	2M809-035MT04W	2M809-035Z104W	2M809-035ZC04W	.500	12.70	.547	13.89
.4375-28 UNEF	2M809-035M05W	2M809-035NF05W	2M809-035ZNU05W	2M809-035MT05W	2M809-035Z105W	2M809-035ZC05W	.5625	14.29	.620	15.75
.5625-24 UNEF	2M809-035M06W	2M809-035NF06W	2M809-035ZNU06W	2M809-035MT06W	2M809-035Z106W	2M809-035ZC06W	.6875	17.46	.755	19.18
.5625-28 UN	2M809-035M16W	2M809-035NF16W	2M809-035ZNU16W	2M809-035MT16W	2M809-035Z116W	2M809-035ZC16W	.6875	17.46	.755	19.18
.5625-32 UN	2M809-035M07W	2M809-035NF07W	2M809-035ZNU07W	2M809-035MT07W	2M809-035Z107W	2M809-035ZC07W	.6875	17.46	.755	19.18
.6250-28 UN	2M809-035M08W	2M809-035NF08W	2M809-035ZNU08W	2M809-035MT08W	2M809-035Z108W	2M809-035ZC08W	.750	19.05	.830	21.08
.6875-28 UN	2M809-035M09W	2M809-035NF09W	2M809-035ZNU09W	2M809-035MT09W	2M809-035Z109W	2M809-035ZC09W	.8125	20.64	.898	22.81
.7500-28 UN	2M809-035M10W	2M809-035NF10W	2M809-035ZNU10W	2M809-035MT10W	2M809-035Z110W	2M809-035ZC10W	.875	22.23	.970	24.64
.8125-28 UN	2M809-035M17W	2M809-035NF17W	2M809-035ZNU17W	2M809-035MT17W	2M809-035Z117W	2M809-035ZC17W	.9375	23.81	1.030	26.16
.8750-28 UN	2M809-035M11W	2M809-035NF11W	2M809-035ZNU11W	2M809-035MT11W	2M809-035Z111W	2M809-035ZC11W	1.000	25.40	1.078	27.38
.9375-20 UNEF	2M809-035M12W	2M809-035NF12W	2M809-035ZNU12W	2M809-035MT12W	2M809-035Z112W	2M809-035ZC12W	1.0625	26.99	1.187	30.15
.9375-28 UN	2M809-035M13W	2M809-035NF13W	2M809-035ZNU13W	2M809-035MT13W	2M809-035Z113W	2M809-035ZC13W	1.0625	26.99	1.187	30.15
1.0000-28 UN	2M809-035M18W	2M809-035NF18W	2M809-035ZNU18W	2M809-035MT18W	2M809-035Z118W	2M809-035ZC18W	1.125	28.58	1.200	30.48
1.0625-20 UN	2M809-035M14W	2M809-035NF14W	2M809-035ZNU14W	2M809-035MT14W	2M809-035Z114W	2M809-035ZC14W	1.1875	30.16	1.264	32.11
1.1250-28 UN	2M809-035M15W	2M809-035NF15W	2M809-035ZNU15W	2M809-035MT15W	2M809-035Z115W	2M809-035ZC15W	1.250	31.75	1.325	33.66
1.1875-28 UN	2M809-035M19W	2M809-035NF19W	2M809-035ZNU19W	2M809-035MT19W	2M809-035Z119W	2M809-035ZC19W	1.3125	33.34	1.415	35.94
1.2500-28 UN	2M809-035M20W	2M809-035NF20W	2M809-035ZNU20W	2M809-035MT20W	2M809-035Z120W	2M809-035ZC20W	1.375	34.93	1.490	37.85
1.5000-28 UN	2M809-035M21W	2M809-035NF21W	2M809-035ZNU21W	2M809-035MT21W	2M809-035Z121W	2M809-035ZC21W	1.625	41.28	1.750	44.45

2M Backshells and Accessories

Flange Gaskets 2M809-108

Flange Gaskets for Series 2M801 Receptacles

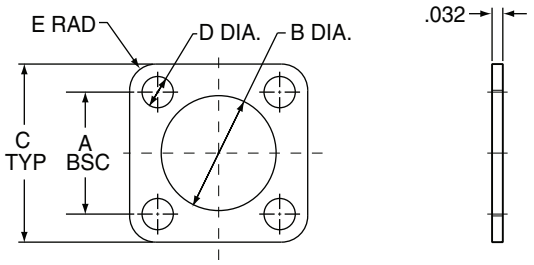

Shell Size	Part Number			A Bsc.		B Dia.		C Typ.		D Dia.		E Rad.	
	Fluorosilicone	Viton®	Conductive Fluorosilicone	in.	mm.	in.	mm.	in.	mm.	in.	mm.	in.	mm.
5	2M809-108F11	2M809-108V11	2M809-108X11	.363	9.22	.342	8.69	.530	13.46	.093	2.36	.078	1.98
6	2M809-108F12	2M809-108V12	2M809-108X12	.423	10.74	.405	10.29	.590	14.99	.093	2.36	.078	1.98
7	2M809-108F13	2M809-108V13	2M809-108X13	.483	12.27	.467	11.86	.650	16.51	.093	2.36	.078	1.98
8	2M809-108F14	2M809-108V14	2M809-108X14	.545	13.84	.530	13.46	.712	18.08	.093	2.36	.078	1.98
9	2M809-108F16	2M809-108V16	2M809-108X16	.607	15.42	560	14.22	.850	21.59	.125	3.18	.105	2.67
10	2M809-108F15	2M809-108V15	2M809-108X15	.670	17.02	.655	16.64	.890	22.61	.125	3.18	.105	2.67
13	2M809-108F17	2M809-108V17	2M809-108X17	.812	20.62	.842	21.39	1.030	26.16	.125	3.18	.105	2.67
16	2M809-108F18	2M809-108V18	2M809-108X18	.981	24.92	1.030	26.16	1.219	30.96	.125	3.18	.105	2.67
17	2M809-108F19	2M809-108V19	2M809-108X19	1.060	26.92	1.092	27.74	1.280	32.51	.125	3.18	.105	2.67
21	2M809-108F43	2M809-108V43	2M809-108X43	1.205	30.61	1.332	33.83	1.427	36.25	.125	3.18	.105	2.67

Flange Gaskets for Series 2M803 Receptacles

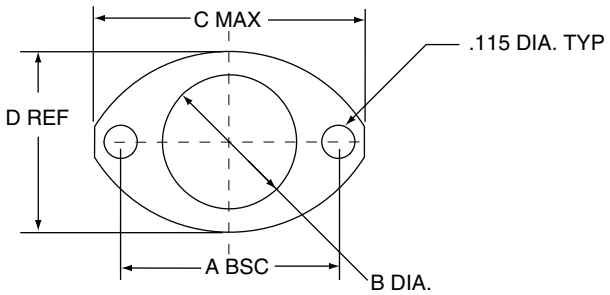

Shell Size	Part Number			A Bsc.		B Dia.		C Max.		D Ref.	
	Fluorosilicone	Viton®	Conductive Fluorosilicone	in.	mm.	in.	mm.	in.	mm.	in.	mm.
5	2M809-108F31	2M809-108V31	2M809-108X31	.513	13.03	.345	8.00	.710	18.03	.460	11.68
6	2M809-108F32	2M809-108V32	2M809-108X32	.598	15.19	.405	10.29	.795	20.19	.522	13.26
7	2M809-108F33	2M809-108V33	2M809-108X33	.708	17.98	.475	12.07	.900	22.86	.590	14.99
8	2M809-108F34	2M809-108V34	2M809-108X34	.964	24.51	.545	13.84	1.160	29.46	.670	17.02
9	2M809-108F35	2M809-108V35	2M809-108X35	1.017	25.83	.605	15.37	1.215	30.86	.721	18.31
10	2M809-108F36	2M809-108V36	2M809-108X36	1.101	37.97	.682	17.32	1.295	32.89	.795	20.19
12	2M809-108F37	2M809-108V37	2M809-108X37	1.204	30.58	.757	19.23	1.400	35.56	.874	22.20
14	2M809-108F38	2M809-108V38	2M809-108X38	1.280	32.51	.910	23.11	1.555	39.50	1.050	26.67
15	2M809-108F39	2M809-108V39	2M809-108X39	1.370	34.80	.970	24.64	1.640	41.66	1.150	29.21

Flange Gaskets 2M809-108

Flange Gaskets for Series 2M805 Receptacles

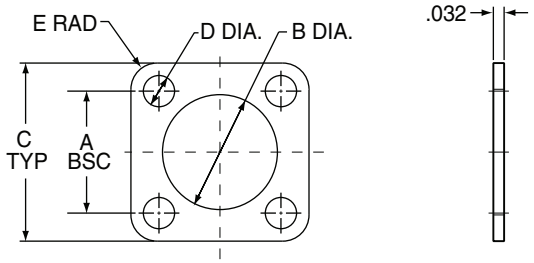

Shell Size	Part Number			A Bsc.		B Dia.		C Typ.		D Dia.		E Rad.	
	Fluorosilicone	Viton®	Conductive Fluorosilicone	in.	mm.	in.	mm.	in.	mm.	in.	mm.	in.	mm.
8	2M809-108F20	2M809-108V20	2M809-108X20	.660	16.76	.530	13.46	.850	21.46	.093	2.36	.078	1.98
9	2M809-108F21	2M809-108V21	2M809-108X21	.723	18.36	.590	14.99	.913	23.19	.093	2.36	.078	1.98
10	2M809-108F22	2M809-108V22	2M809-108X22	.785	19.94	.660	16.76	.975	24.77	.093	2.36	.078	1.98
11	2M809-108F23	2M809-108V23	2M809-108X23	.848	21.54	.720	18.29	1.039	26.39	.093	2.36	.078	1.98
12	2M809-108F24	2M809-108V24	2M809-108X24	.909	23.09	.780	19.81	1.099	27.91	.093	2.36	.078	1.98
15	2M809-108F25	2M809-108V25	2M809-108X25	1.058	26.87	.970	24.64	1.288	32.72	.125	3.18	.105	2.67
18	2M809-108F26	2M809-108V26	2M809-108X26	1.255	31.88	1.160	29.46	1.475	37.47	.125	3.18	.105	2.67
19	2M809-108F27	2M809-108V27	2M809-108X27	1.327	33.71	1.220	30.99	1.537	39.04	.125	3.18	.105	2.67
23	2M809-108F28	2M809-108V28	2M809-108X28	1.570	39.88	1.458	37.03	1.797	45.64	.125	3.18	.105	2.67

2M Backshells and Accessories

O-Rings 2M809-109

O-Rings Series 2M801 Jam Nut Receptacles

Shell Size	Part Number				Inside Dia.		Cross-Section	
	Fluorosilicone	EPDM	Conductive Silicone Cho-Seal 1285	Conductive Fluoro-Silicone Cho-Seal 1298	in.	mm.	in.	mm.
5	2M809-054-05F	2M809-054-05E	249-003-2M801-05B	249-003-2M801-05C	.395	10.03	.048	1.22
6	2M809-054-06F	2M809-054-06E	249-003-2M801-06B	249-003-2M801-06C	.458	11.63	.048	1.22
7	2M809-054-07F	2M809-054-07E	249-003-2M801-07B	249-003-2M801-07C	.595	15.11	.048	1.22
8	2M809-054-08F	2M809-054-08E	249-003-2M801-08B	249-003-2M801-08C	.595	15.11	.048	1.22
9	2M809-054-09F	2M809-054-09E	249-003-2M801-09B	249-003-2M801-09C	.660	16.76	.048	1.22
10	2M809-054-10F	2M809-054-10E	249-003-2M801-10B	249-003-2M801-10C	.710	18.03	.048	1.22
13	2M809-054-13F	2M809-054-13E	249-003-2M801-13B	249-003-2M801-13C	.900	22.86	.048	1.22
16	2M809-054-16F	2M809-054-16E	249-003-2M801-16B	249-003-2M801-16C	1.090	27.69	.048	1.22
17	2M809-054-17F	2M809-054-17E	249-003-2M801-17B	249-003-2M801-17C	1.135	28.83	.048	1.22
21	2M809-054-21F	2M809-054-21E	249-003-2M801-21B	249-003-2M801-21C	1.535	38.99	.048	1.22

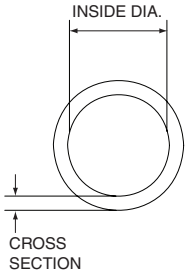

O-Rings Series 2M804 Rear Mount Jam Nut Receptacles

Shell Size	Part Number				Inside Diameter		Cross Section	
	Fluorosilicone	EPDM	Conductive Silicone Cho-Seal 1285	Conductive Fluorosilicone Cho-Seal 1298	in.	mm.	in.	mm.
5	2M809-055-05F	2M809-055-05E	249-003-2M804-05B	249-003-2M804-05C	.489	12.42	.070	1.78
6	2M809-055-06F	2M809-055-06E	249-003-2M804-06B	249-003-2M804-06C	.525	13.34	.070	1.78
7	2M809-055-07F	2M809-055-07E	249-003-2M804-07B	249-003-2M804-07C	.630	16.00	.070	1.78
8	2M809-055-08F	2M809-055-08E	249-003-2M804-08B	249-003-2M804-08C	.676	17.17	.070	1.78
9	2M809-055-09F	2M809-055-09E	249-003-2M804-09B	249-003-2M804-09C	.739	18.77	.070	1.78
10	2M809-055-10F	2M809-055-10E	249-003-2M804-10B	249-003-2M804-10C	.801	20.35	.070	1.78
12	2M809-055-12F	2M809-055-12E	249-003-2M804-12B	249-003-2M804-12C	.926	23.52	.070	1.78
14	2M809-055-14F	2M809-055-14E	249-003-2M804-14B	249-003-2M804-14C	1.051	26.70	.070	1.78
15	2M809-055-15F	2M809-055-15E	249-003-2M804-15B	249-003-2M804-15C	1.114	28.30	.070	1.78

O-Rings Series 2M805 Jam Nut Receptacles

Shell Size	Part Number				Inside Diameter		Cross Section	
	Fluorosilicone	EPDM	Conductive Silicone Cho-Seal 1285	Conductive Fluorosilicone Cho-Seal 1298	in.	mm.	in.	mm.
8	2M809-150-08F	2M809-150-08E	249-003-2M805-08B	249-003-2M805-08C	.595	15.11	.048	1.22
9	2M809-150-09F	2M809-150-09E	249-003-2M805-09B	249-003-2M805-09C	.710	18.03	.048	1.22
10	2M809-150-10F	2M809-150-10E	249-003-2M805-10B	249-003-2M805-10C	.710	18.03	.048	1.22
11	2M809-150-11F	2M809-150-11E	249-003-2M805-11B	249-003-2M805-11C	.785	19.94	.048	1.22
12	2M809-150-12F	2M809-150-12E	249-003-2M805-12B	249-003-2M805-12C	.900	22.86	.048	1.22
15	2M809-150-15F	2M809-150-15E	249-003-2M805-15B	249-003-2M805-15C	1.030	26.16	.048	1.22
18	2M809-150-18F	2M809-150-18E	249-003-2M805-18B	249-003-2M805-18C	1.200	30.48	.048	1.22
19	2M809-150-19F	2M809-150-19E	249-003-2M805-19B	249-003-2M805-19C	1.250	31.75	.048	1.22
23	2M809-150-23F	2M809-150-23E	249-003-2M805-23B	249-003-2M805-23C	1.535	38.99	.048	1.22

Notes: