IOA RPSS-I-I/HART/EX - Power/input signal conditioner

2908452

https://www.phoenixcontact.com/us/products/2908452

Please be informed that the data shown in this PDF document is generated from our online catalog. Please find the complete data in the user documentation. Our general terms of use for downloads are valid.

Ex ic repeater power supply and input signal conditioner, HART for VIP I/O-Marshalling base elements: Transmits 0/4 ... 20 mA signals from the potentially explosive area (zone 2, CID2) to a load (active or passive) in the safe area. 3-way electrical isolation

Product description

Ex ic repeater power supply and input signal conditioner, HART: Transmits supplied or active 0/4 … mA signals from the Ex area to a load (active or passive) in the safe area. HART signals are transmitted bidirectionally. The output can be operated either actively or passively via DIP switches. The module is installed on a corresponding VIP I/O-Marshalling base element by means of plug-in contact. Installation in zone 2, “ec” type of protection is permitted.

Your advantages

- Two-stage progressive release allowing for voltage checks with field-powered devices
- Channel for marking accessories
- Integrated keying reduces possible user error during replacement
- Signal disconnect with test points
- Bidirectional HART signal transmission
- 3-way electrical isolation

Commercial data

Item number	2908452
Packing unit	1 pc
Minimum order quantity	1 pc
Note	Made to order (non-returnable)
Sales key	C480
Product key	DK1151
GTIN	4055626446158
Weight per piece (including packing)	95.7 g
Weight per piece (excluding packing)	42.9 g
Customs tariff number	85437090
Country of origin	CN

Technical data

Product properties

Product type	Repeater power supply
Product family	VIP I/O-Marshalling
No. of channels	1

Insulation characteristics

Overvoltage category	II
Degree of pollution	2

Electrical properties

Electrical isolation	Reinforced insulation in accordance with IEC 61010-1
Limit frequency (3 dB)	1.75 kHz (typ.)
Step response (10-90%)	< 200 µs (typ.)
Maximum temperature coefficient	0.01 %/K
Temperature coefficient, typical	0.01 %/K
Maximum transmission error	< 0.1 % (of final value)

Electrical isolation Input/output/power supply

Electrical isolation	250 V_{rms} (Rated insulation voltage (overvoltage category II; degree of pollution 2, safe isolation as per EN 61010-1))
	2.5 kV (50 Hz, 1 min., test voltage)
	60 V (Peak value in accordance with IEC/EN/UL/CSA C22.2 60079-11)

Supply

Nominal supply voltage	24 V DC
Supply voltage range	18 V DC ... 30 V DC
Power consumption	≤ 1600 mW (at I_{OUT} = 20 mA, 24 V DC, 600 Ω load)

Input data

Signal

Input signal	Current
Current input signal	4 mA ... 20 mA (repeater power supply and isolator operation)
	0 mA ... 20 mA (isolator operation)
Transmitter supply voltage	> 17 V (20 mA)
Step response (10-90%)	typ. 300 µs (4 mA ... 20 mA)
	typ. 1000 µs (0 mA ... 20 mA)

Output data

Signal

Output description	Current output (active and passive)
Current output signal	0 mA ... 20 mA (isolator amplifier)

	4 mA ... 20 mA (repeater power supply and isolator operation)
Max. current output signal	22.5 mA
Transmission Behavior	1:1 to input signal
Load/output load current output	≤ 600 Ω (20 mA)
	525 Ω (22.5 mA)
Residual ripple	< 20 mV_{rms} (600 Ω)
Output ripple	< 20 mV_{rms} (at 600 Ω)
Output behavior in the event of an error	0 mA (Cable break in the input)
	≥ 22.5 mA (Cable short-circuit in the input)
Underload/overload signal range	0 mA ... 22.5 mA (According to NE43)

Connection data

Connection method	Screw connection
Stripping length	10 mm
Screw thread	M3
Conductor cross-section rigid	0.2 mm² ... 1.5 mm² (with ferrule)
	0.2 mm² ... 2.5 mm² (without ferrule)
Conductor cross-section flexible	0.2 mm² ... 1.5 mm²
Conductor cross-section AWG	24 ... 12 (flexible)

Ex data

Safety data

Input voltage U_i	0 V (nA, nB)
	30 V (nC, nD)
	30 V (Controller interface)
Input current I_i	100 mA (Controller interface)
Inductance Li	0 mH
Capacitance Ci	0 nF
Max. output voltage U_o	28 V (nA, nB)
	0 V (nC, nD)
Max. output current I_o	104 mA
Max. output power P_o	726 mW
Safety-related maximum voltage U_m	60 V AC/DC (Peak)
IIC: Max. external inductivity L_o / Max. external capacitance C_o	/ 0.27 µF
IIB/IIIC/IIIB/IIIA: Max. external inductivity L_o / Max. external capacitance C_o	/ 1.65 µF
IIA: Max. external inductivity L_o / Max. external capacitance C_o	/ 6.6 µF
IIC: Max. external inductivity L_o / Max. external capacitance C_o	7.3 mH
IIB/IIIC/IIIB/IIIA: Max. external inductivity L_o / Max. external capacitance C_o	14.7 mH
IIA: Max. external inductivity L_o / Max. external capacitance C_o	29.5 mH

Interfaces

Data communication (bypass)

HART function	Yes
Protocols supported	HART
Limit frequency (3 dB)	> 1.75 kHz (typical)

Signaling

Status display	Green LED (supply voltage)

Dimensions

Width	9.8 mm
Height	75.2 mm
Depth	113.2 mm

Material specifications

Color	gray (RAL 7042)
Flammability rating according to UL 94	V0

Environmental and real-life conditions

Ambient conditions

Degree of protection	IP20
Ambient temperature (operation)	-40 °C ... 70 °C
Ambient temperature (storage/transport)	-40 °C ... 85 °C
Altitude	2000 m (max. altitude above sea level)
Permissible humidity (operation)	5 % ... 95 %

Approvals

ATEX

Identification	Ⓔx II 3G Ex ec IIC T4 Gc
	Ⓔx II 3G Ex ec [ic] IIC T4 Gc
	Ⓔx II (3)D [Ex ic IIIC Dc]
Certificate	Sira 17ATEX4208X

IECEx

Identification	Ex ec IIC T4 Gc
	Ex ec [ic] IIC T4 Gc
	[Ex ic IIIC Dc]
Certificate	IECEx SIR 17.0047X

CSA, USA/Canada

Identification	Class I, Div. 2 Groups A, B, C, D T4
	ANIFW apparatus for connection to: Class I, II, III, Div. 2 Groups A, B, C, D, F, G
	Class I, Zone 2 AEx ec IIC T4 Gc
	AEx ec [ic] IIC T4 Gc
	Connection to Zone 22, [Ex ic IIIC Dc]
	Connection to: Class I, II, III Div. 2 Groups A, B, C, D, F, G

	Ex ec IIC T4 Gc
	Ex ec [ic] IIC T4 Gc
	[Ex ic IIIC Dc]

UKEX

Identification	Ⓔx II 3G Ex ec IIC T4 Gc
	Ⓔx II 3G Ex ec [ic] IIC T4 Gc
	Ⓔx II (3)D [Ex ic IIIC Dc]
Certificate	PxCIF23UKEX2908452X

Corrosive gas test

Identification	ISA S71.04.2013 G3 Harsh Group A

EMC data

Electromagnetic compatibility	Conformance with EMC directive

Electromagnetic HF field

Designation	Electromagnetic RF field
Standards/regulations	EN 61000-4-3
Typical deviation from the measuring range final value	1 %

Fast transients (burst)

Designation	Fast transients (burst)
Standards/regulations	EN 61000-4-4
Typical deviation from the measuring range final value	1 %

Conducted interference

Designation	Conducted interferences
Standards/regulations	EN 61000-4-6
Typical deviation from the measuring range final value	1 %

Standards and regulations

Electrical isolation	Reinforced insulation in accordance with IEC 61010-1

Mounting

Mounting position	any

Drawings

Circuit diagram

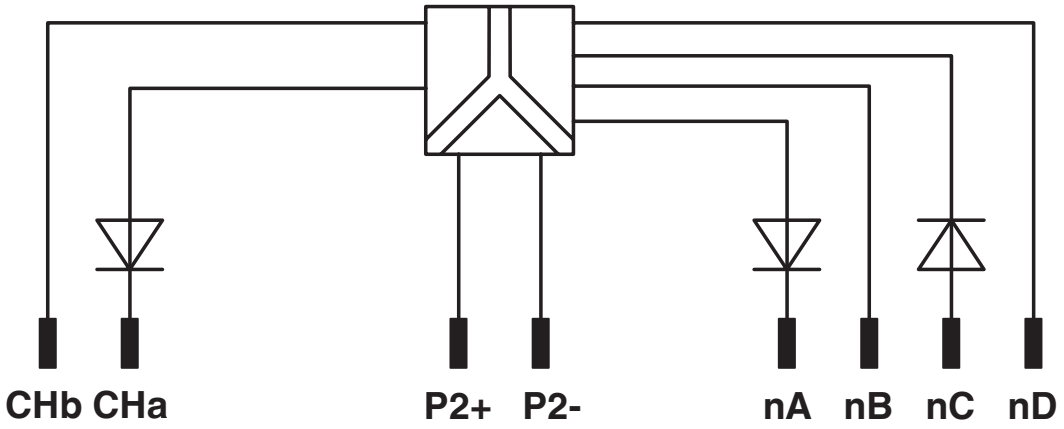

Block diagram

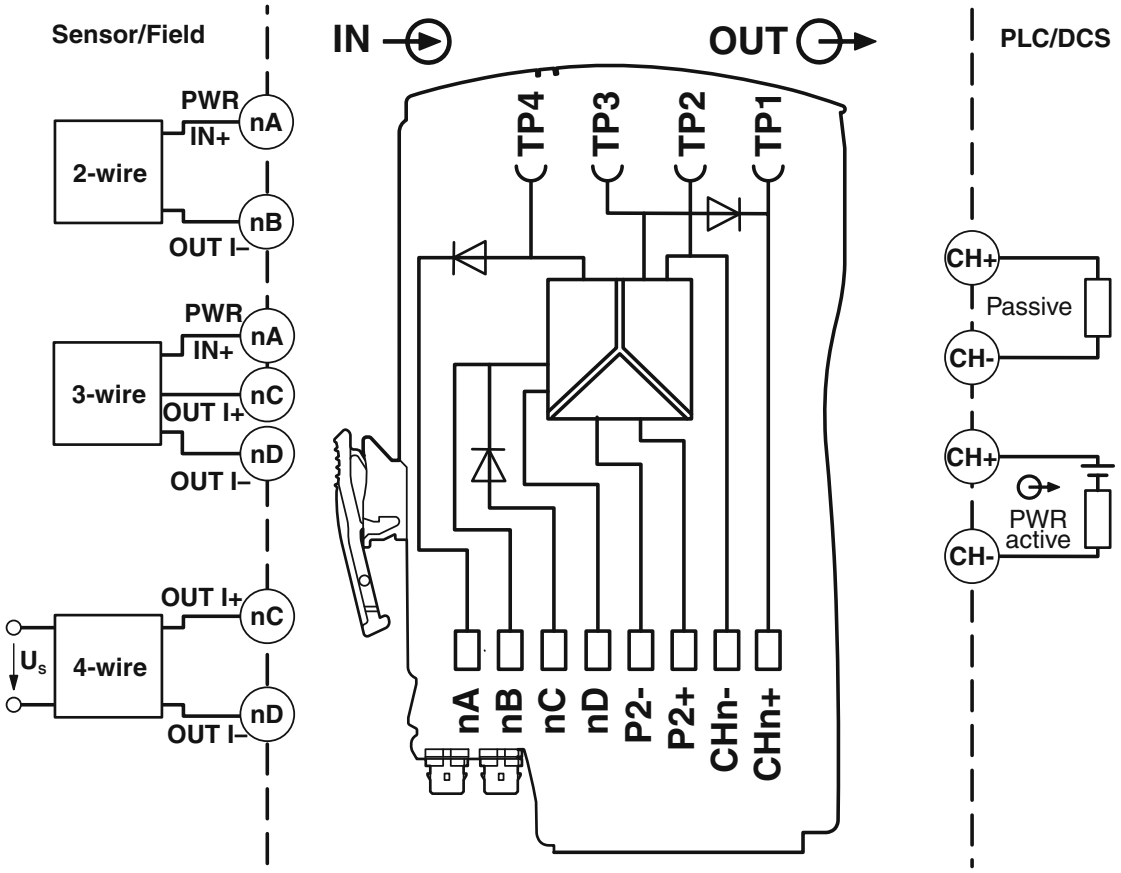

Classifications

ECLASS

ECLASS-13.0	27141152

ETIM

ETIM 9.0	EC002780

UNSPSC

UNSPSC 21.0	39121400

Environmental product compliance

EU RoHS

Fulfills EU RoHS substance requirements	Yes
Exemption	6(c), 7(a), 7(c)-I

China RoHS

Environment friendly use period (EFUP)	EFUP-50
	An article-related China RoHS declaration table can be found in the download area for the respective article under "Manufacturer declaration". For all articles with EFUP-E, no China RoHS declaration table issued and required.

EU REACH SVHC

REACH candidate substance (CAS No.)	Lead(CAS: 7439-92-1)
	2,2',6,6'-tetrabromo-4,4'-isopropylidenediphenol(CAS: 79-94-7)
SCIP	6fc6af25-2b62-46c5-ad0b-7d1ad663cad9

Phoenix Contact 2026 © - all rights reserved
https://www.phoenixcontact.com

Phoenix Contact USA
586 Fulling Mill Road
Middletown, PA 17057, United States
(+717) 944-1300
info@phoenixcon.com