Data sheet

DRL273524L

Weidmüller Interface GmbH & Co. KG
Klingenbergstraße 26
D-32758 Detmold
Germany

www.weidmueller.com

Product image



Similar to illustration

Individual relays within the D-SERIES DRL
- 2 CO contacts
- Optional AC or DC coils
- With integrated status LED

General ordering data

Version	D-SERIES DRL, Relay, Number of contacts: 2, CO contact AgSnO, Rated control voltage: 24 V AC, Continuous current: 10 A, Flat blade connections (4.8 mm x 0.5 mm), Test button available: No
Order No.	2765400000
Type	DRL273524L
GTIN (EAN)	4064675076797
Qty.	20 items

Data sheet

DRL273524L

Weidmüller Interface GmbH & Co. KG
Klingenbergstraße 26
D-32758 Detmold
Germany

www.weidmueller.com

Technical data

Approvals

Approvals	
ROHS	Conform
UL File Number Search	UL Website
Certificate No. (cURus)	E312083

Dimensions and weights

Depth	36 mm	Depth (inches)	1.4173 inch
Height	28 mm	Height (inches)	1.1024 inch
Width	21.5 mm	Width (inches)	0.8465 inch
Net weight	36.55 g		

Temperatures

Storage temperature	-25 °C...55 °C	Ambient temperature	-25 °C...55 °C
Operating temperature		Humidity	35 % to 85 % relative humidity level

Environmental Product Compliance

RoHS Compliance Status	Compliant without exemption
REACH SVHC	No SVHC above 0.1 wt%

Rated data UL

Certificate No. (cURus)	E312083

Control side

Rated control voltage	24 V AC	Rated current AC	54 mA
Power rating	1.2 VA	Coil resistance	180 Ω ± 10 %
Status indicator	red LED		

Load side

Rated switching voltage	250 V AC	Continuous current	10 A
Max. switching frequency at rated load	0.1 Hz	Max. switching voltage, AC	250 V
Inrush current	50 A / 50 ms	AC switching capacity (resistive), max.	2500 VA
DC switching capacity (resistive), max.	300 W @ 24 V	Switch-on delay	<20 ms
Switch-off delay	<20 ms	Contact type	2 CO contact (AgSnO)
Mechanical service life	10 x 106 switching cycles	Min. switching power	10 mA @ 12 V

General data

Test button available	No	
Mechanical switch position indicator	Yes	
Colour	Transparent	
UL94 flammability rating component	Component	Relay cover
	UL94 flammability rating	V-2
	Component	Relay baseplate
	UL94 flammability rating	V-0
	Component	Relay status indicator
	UL94 flammability rating	HB

DRL273524L

Weidmüller Interface GmbH & Co. KG
Klingenbergstraße 26
D-32758 Detmold
Germany

www.weidmueller.com

Technical data

Insulation coordination

Rated voltage	250 V	Pollution severity	3
Surge voltage category	III	Insulating material group	IIIa
Clearance and creepage distances for control side - load side	≥ 4 mm	Dielectric strength for control side - load side	2.5 kVeff/ 1 min
Dielectric strength of neighbouring contacts	1.2 kVeff /1 min.	Dielectric strength of open contact	2 kVeff / 1 min
Impulse withstand voltage	5 kV (1.2/50 µs)	Protection degree	IP20

Further details of approvals / standards

Certificate No. (cURus)	E312083

Connection data

Wire connection method	Flat blade connections (4.8 mm x 0.5 mm)

Classifications

ETIM 6.0	EC001437	ETIM 7.0	EC001437
ETIM 8.0	EC001437	ETIM 9.0	EC001437
ETIM 10.0	EC001437	ECLASS 9.0	27-37-16-01
ECLASS 9.1	27-37-16-01	ECLASS 10.0	27-37-16-01
ECLASS 11.0	27-37-16-01	ECLASS 12.0	27-37-16-01
ECLASS 13.0	27-37-16-01	ECLASS 14.0	27-37-16-01
ECLASS 15.0	27-37-16-01		

Weidmüller Interface GmbH & Co. KG
Klingenbergstraße 26
D-32758 Detmold
Germany

www.weidmueller.com

Drawings

Wiring diagram

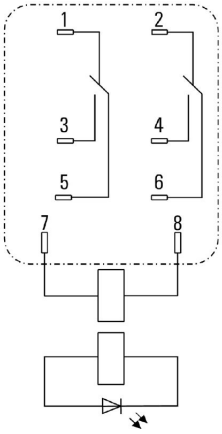

View of Pins from below

DC load limit curve

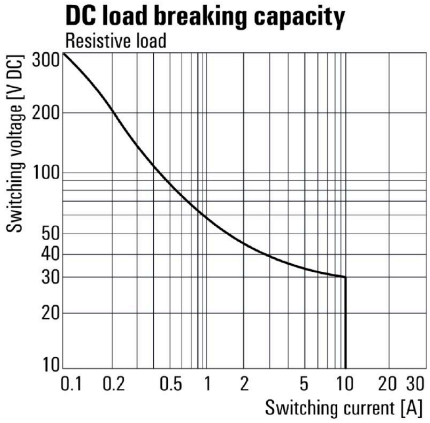

DC load limit curve Resistive load

Graph

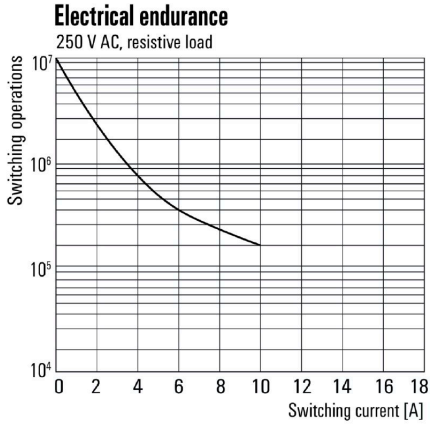

Electrical service life

Graph

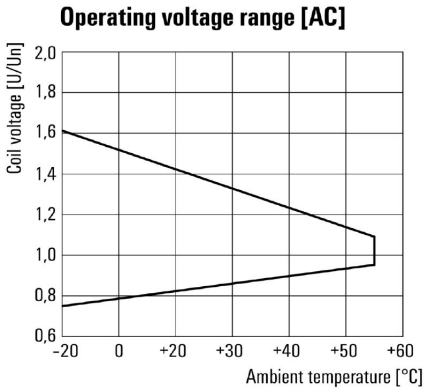

DC operational voltage range

Dimensional drawing

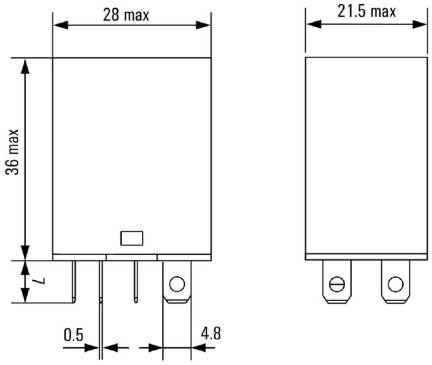

Weidmüller

Weidmüller Interface GmbH & Co. KG
Klingenbergstraße 26
D-32758 Detmold
Germany

www.weidmueller.com

Drawings

Miscellaneous

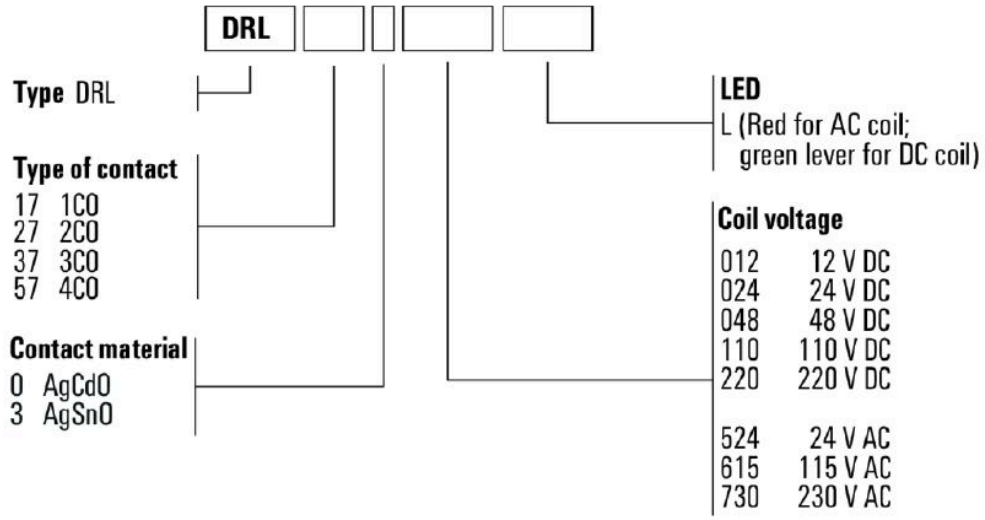

Type codes