Single Turn Trimmer

Model 25

Features:

- 1/4” square
- Sealed single turn
- Cermet
- Through-hole

Electrical

Standard Resistance Range	10 Ohms to 2 Megohms
Standard Resistance Tolerance	±10%
Input Voltage	300 Vdc Max. or rms not to exceed power rating
Power Rating	0.5 Watts at 70°C derating to 0 at 125°C
End Resistance	1% or 2 Ohms Max., whichever is greater
Actual Electrical Travel	210° nominal
Dielectric Strength	900 Vrms
Insulation Resistance	1,000 Megohms Min.
Resolution	Essentially infinite
Contact Resistance Variation	1% or 3 Ohms Max., whichever is greater

Environmental

Seal	85°C Fluorinert® (No Leaks)
Temperature Coefficient	±100 ppm/°C
Operating Temperature Range	−55°C to +125°C
Thermal Shock	Five cycles −55°C to +125°C (2% ΔRT, 2% ΔVR)
Moisture Resistance	Ten 24 hour cycles (3% ΔRT)
Shock	6 ms sawtooth, 100 G’s (1% ΔRT, 1% ΔVR)
Vibration	30 G’s, 10 to 2,000 Hz (1% ΔRT, 1% ΔVR)
High Temperature Exposure	250 hours at 125°C (2% ΔRT, 2% ΔVR)
Rotational Life	200 cycles (2 Ohms or 3% ΔRT, whichever is greater)
Load Life	1,000 hours at 70°C & 0.5 Watts (3% ΔRT, 3% ΔVR)
Resistance to Solder Heat	350°C for 3 seconds or 260°C for 10 seconds (1% ΔRT)

Mechanical

Mechanical Stops	Solid
Stop Strength	7 oz.-in. Min. (500 g-cm)
Torque	3 oz.-in. Max. (200 g-cm)
Weight	0.02 oz. nominal (0.6 grams)

General Note
TT Electronics reserves the right to make changes in product specification without notice or liability. All information is subject to TT Electronics’ own data and is considered accurate at time of going to print.

© TT electronics plc

TT Electronics | BI Technologies
413 Rood RD, Suite 7
Calexico, CA 92231
Ph: + 1 (714) 447-2345
www.ttelectronics.com/bi-technologies

Ordering Information

25 P R 10K LF TR

- Model Series
- Pin Style
- Resistance Prefix
- Resistance Value
- Packaging Option for U or V pin styles only:
  AP = Ammo Pack
  TR = Tape & Reel
- Optional RoHS compliant product code

Packaging Information

Standard (no code): Tubes. 50 units each. All units oriented wth #1 pin to same side.

Option (TR code, only for U or V pin style): Tape & Reel. All units oriented with #3 pin toward direction of feed.

	Pin Style	V	U
Tape	Width =	18 mm	18 mm
	Single hole sprocket =	0.50" pitch	0.50" pitch
	Capacity =	1,000 units	750 units
Reel	Diameter =	14" (363 mm)	14" (363 mm)

Option (AP code, only for U or V pin style): Ammo pack. Tape fold 12". Box 2.0" x 13.4" x 13.8" (50 mm x 340 mm x 350 mm)

Standard Resistance Values, Ohms

10	100	1K	10K	100K	1Meg
20	200	2K	20K	200K	2Meg
50	500	5K	50K	500K	

Circuit Diagram

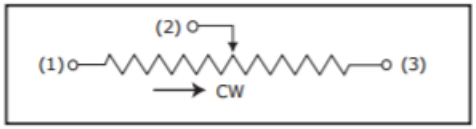

General Note
TT Electronics reserves the right to make changes in product specification without notice or liability. All information is subject to TT Electronics' own data and is considered accurate at time of going to print.

© TT electronics plc

TT Electronics | BI Technologies
413 Rood RD, Suite 7
Calexico, CA 92231
Ph: + 1 (714) 447-2345
www.ttelectronics.com/bi-technologies

Outline Drawings—Top Adjustment

MODEL 25P

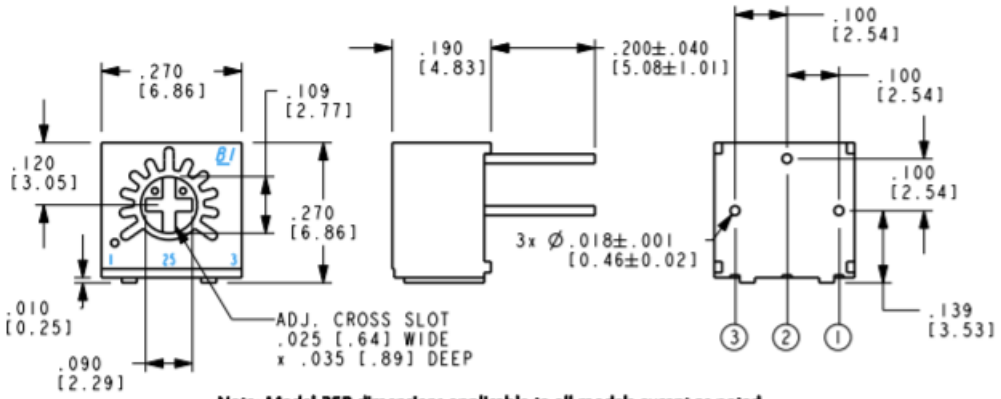

Note: Model 25P dimensions applicable to all models except as noted

MODEL 25U

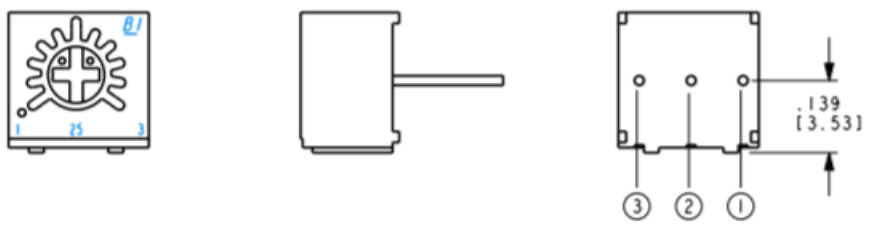

MODEL 25W

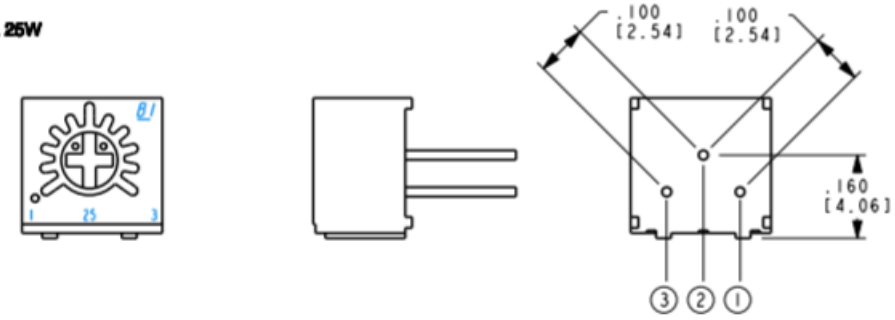

General Note
TT Electronics reserves the right to make changes in product specification without notice or liability. All information is subject to TT Electronics' own data and is considered accurate at time of going to print.

© TT electronics plc

TT Electronics | BI Technologies
413 Rood RD, Suite 7
Calexico, CA 92231
Ph: + 1 (714) 447-2345
www.ttelectronics.com/bi-technologies

Outline Drawings—Side Adjustment

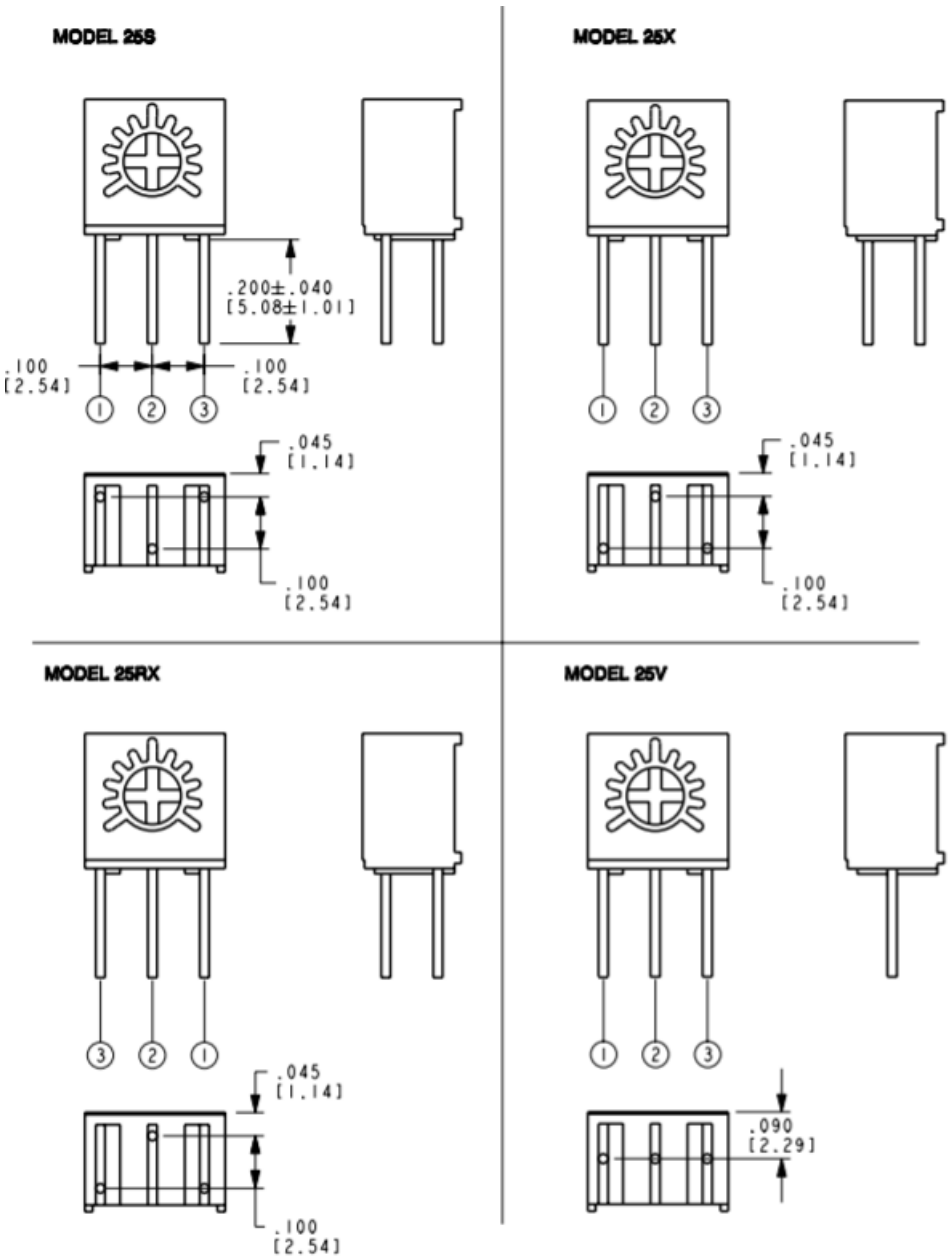

© TT electronics plc

TT Electronics | BI Technologies
413 Rood RD, Suite 7
Calexico, CA 92231
Ph: + 1 (714) 447-2345
www.ttelectronics.com/bi-technologies