# 2375501-2 ✔ ACTIVE

HIVONEX | Charging Inlets

TE Internal #: 2375501-2

250 V, 7 Position, Automotive Housing for Male Terminals, Wire-to-Panel, Sealable, Black, Wire & Cable, Power & Signal, Panel Mount, Charging Inlets

View on TE.com >

Automotive Parts > Automotive Connectors > Automotive Housings > DC Fast Charge CCS1 and CCS2 Inlet Kits

Nominal Voltage Architecture: **250 V**

Connector & Housing Type: **Housing for Male Terminals**

Number of Positions: **7**

Sealable: **Yes**

Operating Temperature Range: **-40 – 85 °C [ -40 – 185 °F ]**

All DC Fast Charge CCS1 and CCS2 Inlet Kits (24)

## Features

### Product Type Features

| | |
|---|---|
| Mixed & Hybrid Connector | Yes |
| Connector & Housing Type | Housing for Male Terminals |
| Sealable | Yes |
| Primary Locking Feature | Integrated in Housing |
| Connector System | Wire-to-Panel |
| Connector & Contact Terminates To | Wire & Cable |

### Configuration Features

| | |
|---|---|
| Number of Positions | 7 |

### Electrical Characteristics

| | |
|---|---|
| Nominal Voltage Architecture | 250 V |

### Body Features

| | |
|---|---|
| Cable Exit Angle | 90 ° |

| | |
|---|---|
| Primary Product Color | Black |

### Contact Features

| | |
|---|---|
| Contact Current Rating (Max) | 32 A, 200 A |

### Mechanical Attachment

| | |
|---|---|
| Connector Mounting Type | Panel Mount |

### Dimensions

| | |
|---|---|
| Product Width | 132.5 mm[5.21 in] |
| Product Length | 126 mm[4.96 in] |
| Connector Height | 164.5 mm[6.45 in] |

### Usage Conditions

| | |
|---|---|
| Operating Temperature Range | -40 – 85 °C[-40 – 185 °F] |
| Operating Temperature (Max) | 85 °C[185 °F] |

### Operation/Application

| | |
|---|---|
| Circuit Application | Power & Signal |

### Industry Standards

| | |
|---|---|
| IP Rating | IP67 |

### Packaging Features

| | |
|---|---|
| Packaging Method | Box |
| Packaging Quantity | 1 |

### Other

| | |
|---|---|
| Connector Position Assurance Capable | No |

## Product Compliance

For compliance documentation, visit the product page on TE.com>

| | |
|---|---|
| EU RoHS Directive 2011/65/EU | Compliant with Exemptions |
| EU ELV Directive 2000/53/EC | Compliant with Exemptions |
| China RoHS 2 Directive MIIT Order No 32, 2016 | 有害物质含量超出标准 Restricted Substance(s) Above Threshold |
| EU REACH Regulation (EC) No. 1907/2006 | Current ECHA Candidate List: JUNE 2025 (250)<br>Candidate List Declared Against: Not Yet Reviewed<br>SVHC > Threshold: |

| | |
|---|---|
| | Octamethylcyclotetrasiloxane (D4) (.5% in Component)<br>Decamethylcyclopentasiloxane (D5) (.5% in Component)<br>2-methyl-1-(4-methylthiophenyl)-2-morpholinopropan-1-one (2% in Component)<br>Dodecamethylcyclohexasiloxane (D6) (.5% in Component)<br>Pb (60% in Component)<br>Article Safe Usage Statements:<br>Do not eat, drink or smoke when using this product. Wash thoroughly after handling. Recycle if possible and dispose of the article by following all applicable governmental regulations relevant to your geographic location. |
| Halogen Content | BFR/CFR/PVC Free, but Br/Cl >900 ppm in other sources. |
| Solder Process Capability | Not reviewed for solder process capability |

Product Compliance Disclaimer

This information is provided based on reasonable inquiry of our suppliers and represents our current actual knowledge based on the information they provided. This information is subject to change. The part numbers that TE has identified as EU RoHS compliant have a maximum concentration of 0.1% by weight in homogenous materials for lead, hexavalent chromium, mercury, PBB, PBDE, DBP, BBP, DEHP, DIBP, and 0.01% for cadmium, or qualify for an exemption to these limits as defined in the Annexes of Directive 2011/65/EU (RoHS2). Finished electrical and electronic equipment products will be CE marked as required by Directive 2011/65/EU. Components may not be CE marked. Additionally, the part numbers that TE has identified as EU ELV compliant have a maximum concentration of 0.1% by weight in homogenous materials for lead, hexavalent chromium, and mercury, and 0.01% for cadmium, or qualify for an exemption to these limits as defined in the Annexes of Directive 2000/53/EC (ELV). Regarding the REACH Regulation, the information TE provides on SVHC in articles for this part number is based on the latest European Chemicals Agency (ECHA) 'Guidance on requirements for substances in articles' posted at this URL: https://echa.europa.eu/guidance-documents/guidance-on-reach

## Compatible Parts

TE Part # 2276149-6
Large Size Wire Applicator-LP



TE Part # 2151022-1
OCEAN_2.0_APPLICATOR-S-055F070F-RSM

TE Part # 2366402-1
COMBO 1,CHARGE INLET ASSY, WITHOUT LED

TE Part # 1-967640-1
4POS MQS REC COD A

TE Part # 2296057-2
COVER, CABLE SEAL, AC

TE Part # 2293266-3
DIA 3.6MM,PIN TERMINAL

## Also in the Series | Charging Inlets

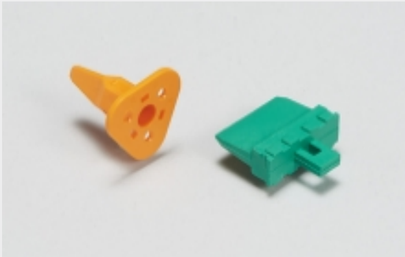

Automotive Connector Locks & Position Assurance(6)

Automotive E-Mobility Connector Housings(4)

Automotive Housings(41)

Connector Seals & Cavity Plugs(8)

Electric, Hybrid & Fuel Cell Cable Assemblies(127)

Other Automotive Connector Accessories(6)

## Customers Also Bought

TE Part #K1156060
Push button switch TS-211-BL12

TE Part #HD34-18-21PN
REC, 21P, AL, N, 20, P

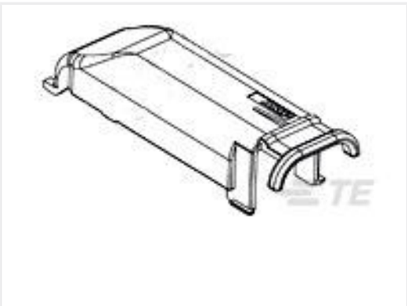

TE Part #368389-1
COVER HSG FOR 81P()

TE Part #444312-1
HSG 12 POSN, FUSE CONTACT

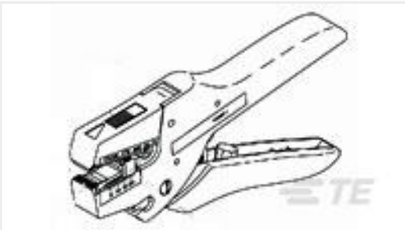

TE Part #734185-1
WIRE STRIPPER .14-6.0mm2 ASSY

TE Part #1394026-1
FLA-STE-GEH9,5MM 2P

TE Part #1-1579007-1
EXTRACTION TOOL

TE Part #1-1579007-4
EXTRACTION TOOL

TE Part #1-2112891-2
36POS,TAB 1.5X0.6,TAB HSG,ASSY

TE Part #444308-2
FRAME FUSE RELAY BOX

## Documents

### Product Drawings

CHARGE INLET, COMBO 1, 90 DEGREE

English

CHARGE INLET, COMBO 1, 90 DEGREE

English

### CAD Files

3D PDF

3D

Customer View Model

ENG_CVM_CVM_2375501-2_A.2d_dxf.zip

English

Customer View Model

ENG_CVM_CVM_2375501-2_A.3d_igs.zip

English

Customer View Model

ENG_CVM_CVM_2375501-2_A.3d_stp.zip

English

By downloading the CAD file I accept and agree to the Terms and Conditions of use.

### Datasheets & Catalog Pages

HIVONEX CONNECTORS & CHARGING SOLUTIONS

English

### Product Specifications

Application Specification

English