Data Sheet | Item Number: 2091-1428/200-000/997-406

THR male header; 1.0 mm Ø solder pin; angled; in tape-and-reel packaging; Pin spacing 3.5 mm; 8-pole; light gray

https://www.wago.com/2091-1428/200-000/997-406



Color: light gray

Similar to illustration

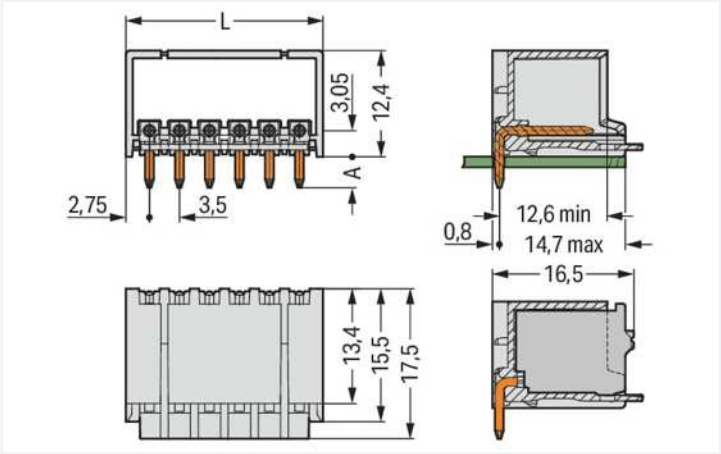

Dimensions in mm

L = (pole no. x pin spacing) + 2.0 mm

A = 3.6 mm THT solder pin

A = 2.4 mm THR solder pin

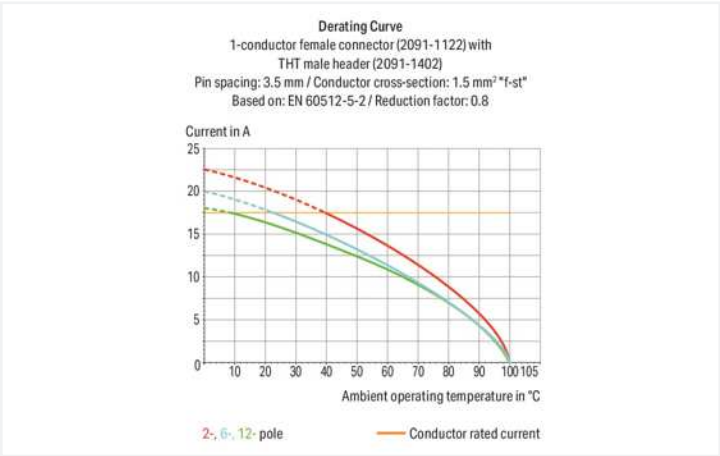

- Assembly of female connectors without loss of poles, allowing different functions to be divided within one male header (≥ 4 poles)
- Coding pins inserted into the header interface prevent mismating, allowing subsequent coding in panel feedthrough applications
- The female connector is fully shrouded by the male header's housing, providing vibration resistance up to 20 g

Notes

Safety information	The **picoMAX® Pluggable Connection System** includes connectors without breaking capacity in accordance with DIN EN 61984. When used as intended, these connectors must not be connected/disconnected when live or under load. The circuit design should ensure header pins, which can be touched, are not live when unmated.
Variants:	Direct marking Other versions (or variants) can be requested from WAGO Sales or configured at https://configurator.wago.com/.

Electrical data

Ratings per IEC/EN

Ratings per	IEC/EN 60664-1
Nominal voltage (III/3)	160 V
Rated impulse voltage (III/3)	2.5 kV
Rated voltage (III/2)	160 V
Rated impulse voltage (III/2)	2.5 kV
Nominal voltage (II/2)	320 V

Ratings per IEC/EN

Rated surge voltage (II/2)	2.5 kV
Rated current	10 A
Legend (ratings)	(III / 2) ≙ Overvoltage category III / Pollution degree 2

Ratings per UL 1059

Approvals per	UL 1059
Rated voltage UL (Use Group B)	300 V
Rated current UL (Use Group B)	10 A
Rated voltage UL (Use Group D)	300 V
Rated current UL (Use Group D)	10 A

Connection data

Total number of potentials	8
Number of connection types	1
Number of levels	1

Connection 1

Pole number	8

Physical data

Pin spacing	3.5 mm / 0.138 inches
Width	30 mm / 1.181 inches
Height	14.8 mm / 0.583 inches
Height from the surface	12.4 mm / 0.488 inches
Depth	17.5 mm / 0.689 inches
Solder pin length	2.4 mm
Solder pin diameter	1 mm
Plated through-hole diameter (THR)	1.2 $^{(+0.1)}$ mm
Reel diameter of tape-and-reel packaging	330 mm
Tape width	44 mm

Mechanical data

Variable coding	Yes
Anti-rotation protection	Yes

Plug-in connection

Contact type (pluggable connector)	Male connector/plug
Connector (connection type)	for PCB
Mismating protection	No
Plugging without loss of pin spacing	Yes
Mating direction to the PCB	0 °
Locking of plug-in connection	Locking latch

PCB contact

PCB contact	THR

Material data

Note (material data)	Information on material specifications can be found here
Color	light gray
Material group	I
Insulation material	Polyphthalamide (PPA GF)
Flammability class per UL94	V0
Contact material	Electrolytic copper (E_{Cu})
Contact plating	Tin
Fire load	0 MJ
Weight	2.7 g

Continued on next page

Environmental requirements

Limit temperature range	-60 … +100 °C
Processing temperature	-35 … +60 °C

Commercial data

eCl@ss 10.0	27-44-04-02
eCl@ss 9.0	27-44-04-02
ETIM 8.0	EC002637
ETIM 7.0	EC002637
PU (SPU)	170 pcs
Packaging type	Bag
Country of origin	DE
GTIN	4055143031912
Customs tariff number	85366990990

Approvals / Certificates

General approvals

Approval	Standard	Certificate Name
CB DEKRA Certification B.V.	IEC 61984	NL-49736/A1
CSA DEKRA Certification B.V.	C22.2	2362521
KEMA/KEUR DEKRA Certification B.V.	EN 61984	71-102260 REV.1
UL Underwriters Laboratories Inc.	UL 1977	E45171
UR Underwriters Laboratories Inc.	UL 1059	E45172

Downloads

Environmental Product Compliance

Compliance Search

Documentation

Continued on next page

Additional Information			
Technical Section	03.04.2019	pdf 1949.09 KB	
		pdf 392.38 KB	

1 Compatible Products

1.1 System counterpart

1.1.1 Female connector/socket



Item No.: 2091-1128
1-conductor female connector; push-button; Push-in CAGE CLAMP®; 1.5 mm²; Pin spacing 3.5 mm; 8-pole; 1,50 mm²; light gray

1.2 Optional Accessories

1.2.1 Coding

1.2.1.1 Coding



Item No.: 2091-1610
Coding key carrier; suitable for 3.5 mm pin spacing; orange

Installation Notes

Coding



Coding a male header (via coding key carrier and two keys for male header, see symbol).