2-2303816-4 ✔ ACTIVE

DEUTSCH | DEUTSCH DT

TE Internal #: 2-2303816-4

12 V / 24 V / 48 V, 3 Position, Automotive Housing for Female Terminals, Wire-to-Wire, 8.66 mm [.34 in] Centerline, Sealable, Black, DEUTSCH DT

View on TE.com >

Automotive Parts > Automotive Connectors > Automotive Housings > DEUTSCH DT Connectors with snap cap

Nominal Voltage Architecture: **12 V, 24 V, 48 V**

Connector & Housing Type: **Housing for Female Terminals**

Number of Positions: **3**

Sealable: **Yes**

Operating Temperature Range: **-55 – 125 °C [-67 – 257 °F]**

All DEUTSCH DT Connectors with snap cap (36)

Features

Product Type Features

Mixed & Hybrid Connector	No
Connector Shape	Triangular
Connector & Housing Type	Housing for Female Terminals
Sealable	Yes
Primary Locking Feature	Integrated in Housing
Connector System	Wire-to-Wire
Connector & Contact Terminates To	Wire & Cable

Configuration Features

Blank Cavity Position	0
Connector Seal Code	E Seal
Number of Positions	3
Number of Rows	2

Electrical Characteristics

Operating Voltage	250 VDC
Nominal Voltage Architecture	12 V, 24 V, 48 V

Body Features

Cable Exit Angle	180°
Primary Product Color	Black

Contact Features

Contact Size	Size 16
Contact Type	Socket
Mating Pin Diameter	1.55 mm[.061 in]
Contact Current Rating (Max)	13 A

Mechanical Attachment

Strain Relief	Add By Accessory
Terminal Position Assurance	No
Mating Alignment Type	Polarization
Mating Alignment	With
Connector Mounting Type	Cable Mount (Free-Hanging)

Housing Features

Housing Material	PA GF
Centerline (Pitch)	8.66 mm[.34 in]

Dimensions

Compatible Insulation Diameter Range	1.35 – 3.05 mm[.053 – .12 in]
Product Width	20.17 mm[.794 in]
Product Length	41.94 mm[1.651 in]
Connector Height	23.89 mm[.94 in]

Usage Conditions

Operating Temperature Range	-55 – 125 °C[-67 – 257 °F]
Operating Temperature (Max)	125 °C[257 °F]

Operation/Application

Circuit Application	Power

Industry Standards

IP Rating	IP68, IP6K9K

Compatible With Agency/Standards Products	SAE J2030
UL Flammability Rating	12mm Flame Test per Standard UL-94

Packaging Features

Packaging Quantity	900
Packaging Method	Box

Other

Serviceable	Yes
Connector Position Assurance Capable	No

Product Compliance

For compliance documentation, visit the product page on TE.com>

EU RoHS Directive 2011/65/EU	Compliant
EU ELV Directive 2000/53/EC	Compliant
China RoHS 2 Directive MIIT Order No 32, 2016	No Restricted Materials Above Threshold
EU REACH Regulation (EC) No. 1907/2006	Current ECHA Candidate List: JUNE 2025 (250) Candidate List Declared Against: JUNE 2025 (250) Does not contain REACH SVHC
Halogen Content	Not Low Halogen - contains Br or Cl > 900 ppm.
Solder Process Capability	Not reviewed for solder process capability

Product Compliance Disclaimer

This information is provided based on reasonable inquiry of our suppliers and represents our current actual knowledge based on the information they provided. This information is subject to change. The part numbers that TE has identified as EU RoHS compliant have a maximum concentration of 0.1% by weight in homogenous materials for lead, hexavalent chromium, mercury, PBB, PBDE, DBP, BBP, DEHP, DIBP, and 0.01% for cadmium, or qualify for an exemption to these limits as defined in the Annexes of Directive 2011/65/EU (RoHS2). Finished electrical and electronic equipment products will be CE marked as required by Directive 2011/65/EU. Components may not be CE marked. Additionally, the part numbers that TE has identified as EU ELV compliant have a maximum concentration of 0.1% by weight in homogenous materials for lead, hexavalent chromium, and mercury, and 0.01% for cadmium, or qualify for an exemption to these limits as defined in the Annexes of Directive 2000/53/EC (ELV). Regarding the REACH Regulation, the information TE provides on SVHC in articles for this part number is based on the latest European Chemicals Agency (ECHA) 'Guidance on requirements for substances in articles' posted at this URL: https://echa.europa.eu/guidance-documents/guidance-on-reach

Compatible Parts

TE Part # CAT-D48-ST273
DEUTSCH Solid Contacts

TE Part # CAT-D487-H342
DEUTSCH DT Headers

TE Part # CAT-J41-DDRC
DEUTSCH DT Receptacle Connectors

TE Part # CAT-D487-W416
Wedgelocks: DEUTSCH DT

TE Part # CAT-D48-SFT273
DEUTSCH Stamped and Formed Contacts

TE Part # 1011-345-0305
DUST CAP, 3P, PLG, BLK, DT

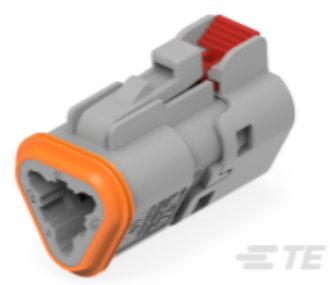

TE Part # CAT-J41-DDSCC
DEUTSCH DT Connectors with snap cap

TE Part # 1062-16-1422
SOC, SF, SIZE 16, 12-16, SLVLES, NI/NI

TE Part # CAT-D48-SP729
DEUTSCH Sealing Plugs

TE Part # DT-RT1
EXT TOOL, FRONT RELEASE

TE Part # CAT-J41-DDIC
DEUTSCH DT Integrated Component

TE Part # DT04-3P-EP16
REC, 3P, BLK, 33 OHM RESISTOR

TE Part # CAT-J41-DDFRC
DEUTSCH DT Flange Receptacle Connector

TE Part # 1010-062-0306
SEAL, INTF, 3P, RED-ORG, SL RET, DT

TE Part # 1062-14-0177
SOC, SF, SIZE 16, 14-18, SN/SN

Also in the Series | DEUTSCH DT

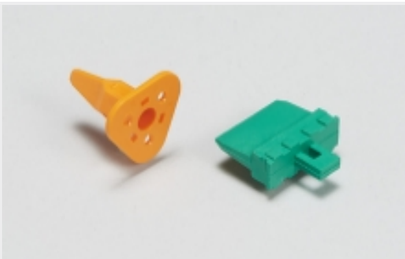

Automotive Connector Locks & Position Assurance(91)

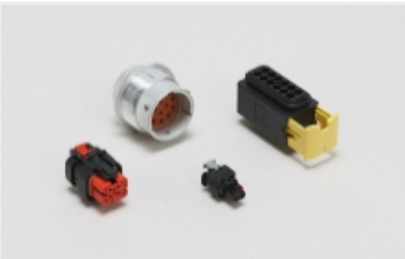

Automotive Housings(767)

Connector Caps & Covers(1)

Connector Strain Relief(35)

Infotainment & Multimedia Cable Assemblies(1)

Other Automotive Connector Accessories(27)

Rectangular Backshells & Clamps(3)

Customers Also Bought

TE Part #DT04-3P-L012
REC, 3P, GRY, N, FLANGE

TE Part #2428-010-2405
COVER,24SZ,BLK,ST,NW17,19,23,26, L017,HDP

TE Part #HDP24-24-47SE-L017
REC, 47P, BLK, E, RNG, 16/20, S

TE Part #DT06-3S-E008
PLG, 3P, GRY, N, XCAP

TE Part #W2S-P012
WEDGE LOCK, 2P, PLG, GRN, SL RET, DT

TE Part #DT04-12PA-CE03
REC, 12P, BLK, E, CAP, A

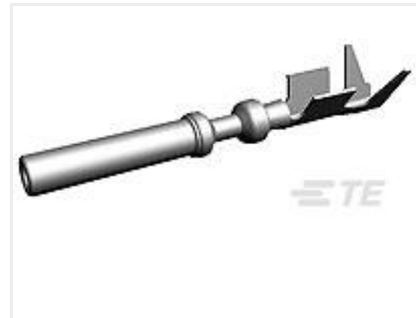

TE Part #3-1447221-3
S/S REC CONTACT ASSY, AU, 0.75-1.25

TE Part #CAT-J41-DDSCC
DEUTSCH DT Connectors with snap cap

Documents

CAD Files

3D PDF

3D

Customer View Model
ENG_CVM_CVM_2-2303816-4_A.2d_dxf.zip

English

Customer View Model
ENG_CVM_CVM_2-2303816-4_A.3d_igs.zip

English

Customer View Model
ENG_CVM_CVM_2-2303816-4_A.3d_stp.zip

English

By downloading the CAD file I accept and agree to the Terms and Conditions of use.

Product Specifications

Application Specification

English

Agency Approvals

UL Report

English