1SNA150053R0000 ✔ ACTIVE

TE Internal #: 1SNA150053R0000
TE Internal Description: THB70-P6
View on TE.com >

Product Compliance

For compliance documentation, visit the product page on TE.com>

EU RoHS Directive 2011/65/EU	Compliant
EU ELV Directive 2000/53/EC	Compliant
China RoHS 2 Directive MIIT Order No 32, 2016	有害物质含量符合标准要求 No Restricted Substance(s) Above Threshold
EU REACH Regulation (EC) No. 1907/2006	Current ECHA Candidate List: JUNE 2025 (250) Candidate List Declared Against: JUNE 2025 (250) Does not contain REACH SVHC
Halogen Content	Low Halogen - Br, Cl, F < 900 ppm per homogenous material. Also BFR/CFR/PVC Free
Solder Process Capability	Not reviewed for solder process capability

Product Compliance Disclaimer

This information is provided based on reasonable inquiry of our suppliers and represents our current actual knowledge based on the information they provided. This information is subject to change. The part numbers that TE has identified as EU RoHS compliant have a maximum concentration of 0.1% by weight in homogenous materials for lead, hexavalent chromium, mercury, PBB, PBDE, DBP, BBP, DEHP, DIBP, and 0.01% for cadmium, or qualify for an exemption to these limits as defined in the Annexes of Directive 2011/65/EU (RoHS2). Finished electrical and electronic equipment products will be CE marked as required by Directive 2011/65/EU. Components may not be CE marked. Additionally, the part numbers that TE has identified as EU ELV compliant have a maximum concentration of 0.1% by weight in homogenous materials for lead, hexavalent chromium, and mercury, and 0.01% for cadmium, or qualify for an exemption to these limits as defined in the Annexes of Directive 2000/53/EC (ELV). Regarding the REACH Regulation, the information TE provides on SVHC in articles for this part number is based on the latest European Chemicals Agency (ECHA) 'Guidance on requirements for substances in articles' posted at this URL: https://echa.europa.eu/guidance-documents/guidance-on-reach

Compatible Parts

TE Part # 1SNA150056R0000
TH35-7.5-H90D-ALU-2METERS

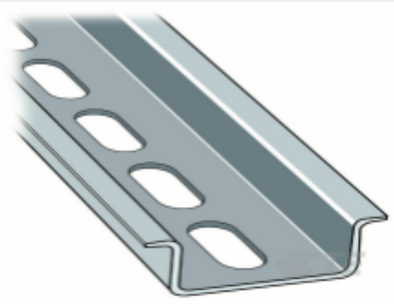

TE Part # 1SNA178529R0400
PR50

TE Part # 1SNA150040R0000
TH35-7.5-1METER

TE Part # 1SNA150057R0000
TH35-7.5-H30D-ALU-1METERS

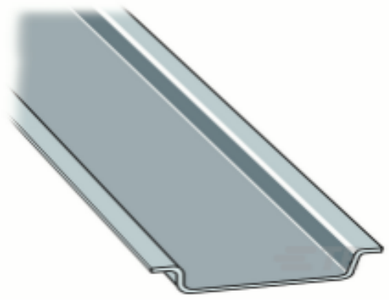

TE Part # 1SNA174300R1700
PR3.Z2

TE Part # 1SNA150044R0000
TH35-15-R-1METER

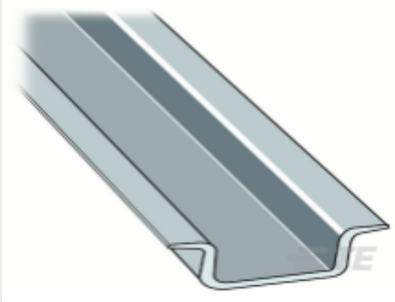

TE Part # 1SNA168500R1200
PR4

TE Part # 1SNA150041R0000
TH35-7.5-P6-1METER

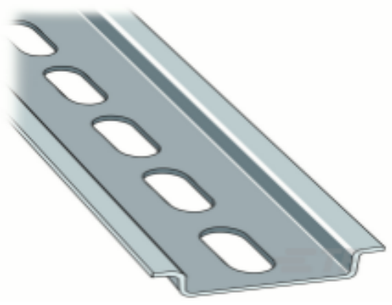

TE Part # 1SNA173220R0500
PR30

TE Part # 1SNA150043R0000
TH35-15-P6-1METER

TE Part # 1SNA150042R0000
TH35-15-1METER

TE Part # 1SNA150058R0000
TH35-7.5-H30D-ALU-2METERS

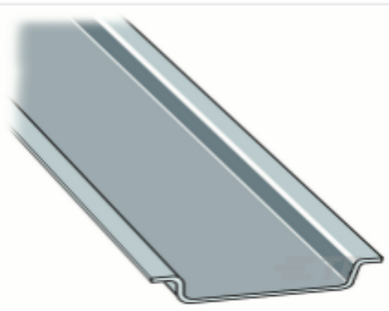

TE Part # 1SNA164800R0300
PR3.G2

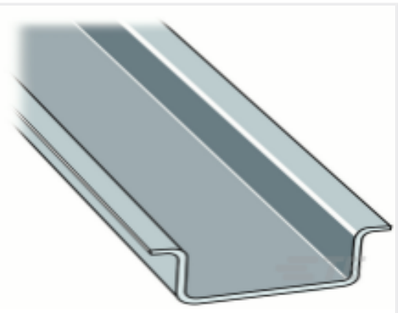

TE Part # 1SNA168700R2200
PR5

Customers Also Bought

TE Part #316185-002
55A1121-20-0/9-9

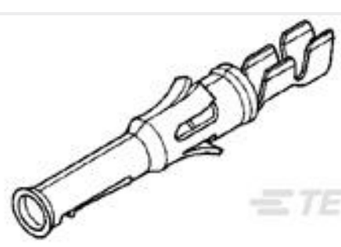

TE Part #66592-1
TYPE VI SKT CONT,M-MATE,LP

TE Part #66740-5
TYPE XII FEMALE CONT (STRIP)

TE Part #350918-3
UMNL PIN 18-14 PTPPHBZ

TE Part #1-353717-5
DYNAMIC D-3 REC CONT. 3L PRE-TIN L/P

TE Part #1658614-2
25 POS HDF RCPT, AP, LEAD FREE

TE Part #1658615-2
25 POS HDF PLUG, AP, LEAD FREE

TE Part #1757819-4
AMPLIMITE,ASY,PLUG,STD,109,ZN,4

TE Part #1-2405077-0
75 AHV S BS

TE Part #1SNA150049R0000
THB25-P6

Documents

Product Drawings

THB70-P6

English